APS-3.1.2.1.0, Rev. 5
(APS_1188832)

ARGONNE NATIONAL LABORATORY
9700 South Cass Avenue, Lemont, Illinois 60439

ADVANCED PHOTON SOURCE SAFETY ASSESSMENT DOCUMENT

June 2017
(Addendum 1 added September 2019)

work sponsored by

U.S. DEPARTMENT OF ENERGY
Office of Science

The APS Final Safety Assessment Document was issued in 1996 as part of the APS construction activity.

Revision 1 was made in May 1998 to add the top-up operating mode and to document the conversion to operation with electrons. The Safety Envelope was not changed in this revision.

Revision 2 added several APS improvements and many minor updates in keeping with the effort to keep the SAD as an accurate description of the APS and its safety analysis. There was no change in the APS Safety Envelope in this revision. Many of the changes were minor language clarifications while some were chronological tense updates, such as "The APS will measure ..." was changed to "The APS measures ..."

Revision 3 documented the removal of the third, hardwired interlock chain from the Access Control Interlock System (ACIS) as reviewed and approved by the APS Radiation Safety Policy and Procedure Committee in April 2006. It also made corrections to the acronyms refering to APS divisions due to the APS reorganization of April 2006. The mission descriptions were also updated for the three APS divisions due to the APS reorganization of 2006.

Revision 4 documented numerous minor changes to accelerator system technical descriptions to ensure those descriptions addressed the current APS configuration. Various beamline associate descriptive material was removed as being superflous to the SAD hazard analysis and accelerator safety envelope. Many editorial changes were made to correct previously missed textual or factual errors. The material previously included in the revision addendum has now been incorporated into the SAD. References were updated as needed to reflect current DOE safety requirement which Argonne programs must follow.

Revision 5 documented the removal of the LEUTL and the inclusion of the Linac Extension Area (LEA). Revision 5 also updated Safety Interlocks information to describe current configurations. Many editorial changes were made to correct previously missed textual or factual errors.

Addendum 1 was added in September 2019 and includes corrections to Section 3.11.2 *Personnel Safety Syste*m and Section 3.12.1 *Shielding Policy* (last paragraph only) that include the Personnel Safety System Gen 4 systems.

Table of Contents

ACRONYMS xxi

UNIT ABBREVIATIONS xxix

ABSTRACT xxxiii

1.0 INTRODUCTION 1-1
1.1 Objective of Document 1-1
1.2 Advanced Photon Source Facility Description 1-1
1.3 Scope of Document 1-5
1.4 Document Layout 1-9

2.0 SUMMARY AND CONCLUSIONS 2-1
2.1 Hazard Analysis Methodology 2-1
2.2 Summary of Results 2-1

3.0 APS FACILITY, SITE AND OPERATIONS DESCRIPTION 3-1
3.1 Policy and Organization 3-1
3.1.1 APS Safety Policy 3-1
3.1.2 Argonne and APS Organizations 3-3
3.1.3 APS Users 3-4
3.1.3.1 User Access and Safety Training 3-4
3.1.3.2 Sector Safety Plans 3-4
3.1.3.3 User Experiment Safety Review 3-5
3.1.4 Beamline Review and Commissioning 3-5
3.1.4.1 Beamline Operations Oversight 3-6
3.1.5 Safety Training 3-6
3.1.6 Argonne Safety Responsibility 3-6
3.1.7 Fire Protection 3-6
3.1.7.1 Introduction 3-6
3.1.7.2 Site-Wide Fire Protection Systems and Support Organizations 3-8
3.1.8 Waste Handling, Storage, and Disposal 3-9
3.1.9 Emergency Management 3-9
3.2 APS Site 3-10
3.2.1 Introduction and Site Description3- 3-10
3.2.2 Population Distribution 3-10
3.2.3 Environmental Features 3-13
3.2.4 Geology and Seismology 3-14
3.2.5 Cultural Resource Compliance 3-16

3.2.6 Environmental Compliance 3-16
3.2.7 Wetland Mitigation Monitoring 3-18
3.3 APS Linac System Technical Facilities Description 3-20
3.3.1 General Overview 3-20
3.3.2 Electron Gun Systems 3-21
3.3.2.1 Thermionic rf Electron Gun Systems 3-21
3.3.2.2 Photocathode rf Gun System 3-24
3.3.2.3 Laser System 3-25
3.3.3 Linac rf Accelerating System 3-26
3.3.4 Linac RF Waveguide Switching System 3-27
3.3.5 Upstream Electron Linac 3-28
3.3.6 Bunch Compressor 3-29
3.3.7 Downstream Electron Linac 3-31
3.3.8 Linac Operating Conditions 3-33
3.4 APS Linac Extension Area (LEA) - Technical Facilities Description 3-33
3.4.1 General Overview 3-33
3.4.2 PAR and Booster Bypass Beamline Systems 3-34
3.4.2.1 PB and BB Beam Transport Line DC Magnets 3-36
3.4.2.2 PB and BB Beam Transport Line Vacuum Systems 3-38
3.4.2.3 PB and BB Beam Transport Line Diagnostics 3-38
3.4.3 LEA Tunnel Beam Transport Line System 3-38
3.4.4 LEA End Station 3-39
3.4.5 LEA Operating Envelope 3-39
3.5 APS Particle Accumulator Ring Technical Facilities Description 3-39
3.5.1 General Overview 3-39
3.5.2 Particle Accumulator Ring Components 3-40
3.5.2.1 PAR DC Magnets 3-44
3.5.2.2 PAR Pulsed Magnets 3-45
3.5.2.3 PAR rf Systems 3-45
3.5.2.4 PAR Diagnostics 3-45
3.5.2.5 PAR Vacuum System 3-46
3.5.3 Low Energy Transport Line Components 3-46
3.5.3.1 LET DC Magnets 3-46
3.5.3.2 LET Diagnostics 3-47
3.5.3.3 LET Vacuum System 3-47
3.5.4 PAR Operating Envelope 3-47
3.6 APS Injector Synchrotron Technical Facilities Description 3-48
3.6.1 General Overview 3-48
3.6.2 Injector Synchrotron Components 3-51
3.6.2.1 Synchrotron Magnets and Power Supplies 3-51

3.6.2.2 Synchrotron Pulsed Magnets and Power Supplies 3-55
3.6.2.3 Synchrotron rf System 3-57
3.6.2.4 Synchrotron Diagnostics 3-59
3.6.2.5 Synchrotron Vacuum System 3-60
3.6.3 High Energy Transport Line Components 3-60
3.6.3.1 HET Magnets 3-60
3.6.3.2 HET Diagnostics 3-63
3.6.3.3 HET Vacuum System 3-64
3.6.4 Synchrotron Operating Envelope 3-64
3.7 APS Storage Ring Technical Facilities Description 3-65
3.7.1 General Overview 3-65
3.7.2 Storage Ring Components 3-68
3.7.2.1 Storage Ring DC Magnets and Power Supplies 3-68
3.7.2.2 Storage Ring Pulsed Magnets and Power Supplies 3-68
3.7.2.3 Storage Ring rf Systems 3-70
3.7.2.4 Storage Ring Diagnostics 3-74
3.7.2.5 Storage Ring Vacuum Systems 3-79
3.7.3 Storage Ring Operating Envelope 3-80
3.8 APS Insertion Device Technical Facilities Description 3-80
3.8.1 Introduction 3-80
3.8.2 Insertion Device Assembly 3-81
3.8.3 Insertion Device Vacuum Chamber 3-82
3.9 Beamline Description 3-86
3.9.1 Front End 3-86
3.9.2 Beamline 3-86
3.10 Conventional Facilities 3-87
3.10.1 Introduction 3-87
3.10.2 Conventional Facility Design Considerations 3-87
3.10.3 Conventional Facility Description 3-88
3.10.4 Building Access and Egress 3-91
3.10.5 Security Protection 3-91
3.11 Engineered Safety Systems 3-92
3.11.1 Access Control and Interlock System 3-92
3.11.1.1 Introduction 3-92
3.11.1.2 Area Classification 3-93
3.11.1.3 Access Control and Interlock System (ACIS) Description 3-94
3.11.1.3.1 Design Conformance to Available Documents 3-94
3.11.1.3.1.1 Detailed ACIS Description 3-95
3.11.1.3.1.1.1 Original ACIS Description 3-97
3.1.1.1.3.1.1.2 Updated ACIS Description 3-98

3.11.1.3.1.2 ACIS Equipment Description 3-98
3.11.1.3.1.3 Operation Interruption Methods 3-113
3.11.1.3.1.4 Tunnel Occupant Protection Methods 3-115
3.11.1.3.1.5 ACIS Implementation Methodology 3-117
3.11.1.3.1.6 ACIS-PSS Interface 3-123
3.11.1.4 ACIS Operational Procedures 3-123
3.11.1.4.1 Conditions for Linac/PAR Operation 3-123
3.11.1.4.1.1 Linac/PAR Interleaving Operation 3-125
3.11.1.4.2 Conditions for LEA Operation 3-126
3.11.1.4.3 Conditions for Synchrotron Operations 3-126
3.11.1.4.4 Conditions for Storage Ring Operations 3-127
3.11.1.4.4.1 Normal Injection into the Storage Ring 3-128
3.11.1.4.4.2 Synchrotron Beam to the HET Beam Dump 3-129
3.11.1.4.4.3 Using RF3 to Backup the Synchrotron's RF5 3-129
3.11.1.4.4.4 RF Conditioning Mode 3-130
3.11.1.4.4.5 RF Test Stand (RFTS) Operation 3-130
3.11.1.4.4.6 Top-Up Mode Operation 3-131
3.11.1.4.5 Conditions for Storage Ring Operations 3-131
3.11.1.4.6 Securing the Linac/PAR, LEA, Synchrotron, and Storage Ring Areas 3-133
3.11.1.4.7 Controlled Access Mode 3-134
3.11.1.4.8 Equipment Test Mode 3-134
3.11.1.4.9 ACIS Operational Key Control 3-135
3.11.1.5 Injector Test Stand (ITS) 3-135
3.11.1.5.1 Injector Test Stand (ITS) Interlocks 3-135
3.11.1.5.2 Laser Room Interlocks 3-136
3.11.1.6 ACIS Testing 3-136
3.11.1.7 ACIS Configuration Control 3-136
3.11.1.8 Personnel Access Policy 3-137
3.11.1.8.1 Authorized Access Mode 3-137
3.11.1.8.2 Controlled Access Mode 3-137
3.11.2 Personnel Safety System 3-138
3.11.2.1 Introduction 3-138
3.11.2.2 Beamline Personnel Safety System (PSS) Description 3-139
3.11.2.2.1 Overview 3-139
3.11.2.2.2 Station Control Panel 3-141
3.11.2.2.3 Station Door Control Panel (pneumatic doors only) 3-142
3.11.2.2.4 System Control Panel 3-142
3.11.2.2.5 Faults and Trips 3-142
3.11.2.2.6 Experimental Station Hardware 3-143

3.11.2.3 Storage Ring ACIS and PSS Interface 3-144
3.11.2.4 PSS Testing and Configuration Control 3-145
3.11.2.4.1 PSS Testing Overview 3-145
3.11.2.4.2 PSS Configuration Control 3-145
3.11.2.4.3 PSS Documentation 3-146
3.12 Shielding Policy and Radiation Monitoring 3-146
3.12.1 Shielding Policy 3-146
3.12.2 Shielding Design Description 3-148
3.12.3 Containment 3-149
3.12.4 External Radiation Levels and Monitoring 3-152
3.12.4.1 Soil and Water Activation 3-152
3.12.4.2 Radionuclides and Off-Site Dose Estimate 3-152
3.12.4.3 Monitoring Program 3-153
3.13 Electrical Safety 3-154

4.0 HAZARD ANALYSIS 4-1
4.1 Hazard Analysis Methodology 4-1
4.2 Ionizing Radiation Hazards 4-5
4.2.1 Linac 4-5
4.2.1.1 Linac Prompt Radiation Hazards 4-5
4.2.1.1.1 Normal Linac Operations for Electrons 4-5
4.2.1.1.2 Linac Maximum Credible Incident 4-7
4.2.1.1.3 Linac X-rays 4-7
4.2.1.2 Linac Activation and Residual Radiation Hazards 4-8
4.2.1.3 Linac Ionizing Radiation Hazard Summary 4-8
4.2.2 LEA 4-9
4.2.2.1 LEA Prompt Radiation Hazards 4-9
4.2.2.1.1 Normal LEA Operations with Electrons 4-9
4.2.2.1.2 LEA System Maximum Credible Incident 4-10
4.2.2.1.3 Normal LEA Operations 4-11
4.2.2.1.4 X-rays 4-11
4.2.2.2 Activation and Residual Radiation Hazards 4-11
4.2.2.3 LEA System Ionizing Radiation Hazard Summary 4-12
4.2.3 Particle Accumulator Ring 4-12
4.2.3.1 PAR Prompt Radiation Hazards 4-12
4.2.3.1.1 Normal PAR Operations 4-13
4.2.3.1.2 PAR Maximum Credible Incident 4-13

4.2.3.1.3 PAR X-rays 4-16
4.2.3.2 PAR Activation and Residual Radiation Hazards 4-16
4.2.3.3 PAR Ionizing Radiation Hazard Summary 4-16
4.2.4 Injector Synchrotron 4-17
4.2.4.1 Synchrotron Prompt Radiation Hazards 4-17
4.2.4.1.1 Normal Synchrotron Operations 4-18
4.2.4.1.2 Synchrotron Maximum Credible Incident 4-18
4.2.4.1.3 Synchrotron X-rays 4-20
4.2.4.1.3.1 Synchrotron Radiation 4-20
4.2.4.1.3.2 Radio Frequency Cavities 4-21
4.2.4.2 Synchrotron Activation and Residual Radiation Hazards 4-21
4.2.4.3 Synchrotron Ionizing Radiation Hazard Summary 4-21
4.2.5 Storage Ring 4-22
4.2.5.1 Storage Ring Prompt Radiation Hazards 4-22
4.2.5.1.1 Normal Storage Ring Operations with Electrons 4-23
4.2.5.1.2 Storage Ring Maximum Credible Incident 4-25
4.2.5.1.3 Storage Ring X-rays 4-26
4.2.5.1.3.1 Synchrotron Radiation 4-26
4.2.5.1.3.2 Beam Diagnostics Beamlines 4-26
4.2.5.1.3.3 Radio Frequency Cavities 4-26
4.2.5.2 Storage Ring Activation and Residual Radiation Hazards 4-27
4.2.5.3 Storage Ring Ionizing Radiation Hazard Summary 4-27
4.2.6 X-ray Beamlines 4-28
4.2.6.1 Introduction 4-28
4.2.6.2 Bremsstrahlung 4-29
4.2.6.2.1 Primary Bremsstrahlung (PB) 4-30
4.2.6.2.1.1 Description 4-30
4.2.6.2.1.2 Mitigation 4-31
4.2.6.2.2 Secondary Bremsstrahlung 4-39
4.2.6.2.2.1 Normal Incidence Copper Targets in FOEs 4-39
4.2.6.2.2.2 Bremsstrahlung Stops 4-43
4.2.6.2.2.3 Shallow angle scattering 4-43
4.2.6.2.2.4 Beam Pipes 4-48
4.2.6.2.2.5 Collimators 4-48
4.2.6.2.2.6 Shielded Cabinets 4-48
4.2.6.2.2.7 Bremsstrahlung-Generated Neutrons 4-48
4.2.6.3 Synchrotron Radiation 4-52
4.2.6.3.1 Direct Synchrotron Radiation 4-52
4.2.6.3.1.1 White Beam 4-52
4.2.6.3.1.2 Monochromatic Beam 4-53

4.2.6.3.1.3 Mirror-Modified Beam (Pink Beam) 4-54
4.2.6.3.2 Scattered Synchrotron Radiation 4-54
4.2.6.3.2.1 Experiment Station Enclosures 4-56
4.2.6.3.2.2 Transport 4-57
4.2.6.3.2.3 Shielding Recommendations 4-57
4.2.6.4 Loss of Vacuum Incident in the Storage Ring 4-58
4.2.6.5 Experiment Beamline Ionizing Radiation Hazard Summary 4-59
4.2.7 Radioactive Materials, General 4-59
4.3 Non-ionizing Radiation Hazards 4-61
4.3.1 rf Radiation Hazards 4-62
4.3.1.1 Linac rf Radiation Hazards (including rf gun) 4-62
4.3.1.2 Particle Accumulator Ring rf Radiation Hazards 4-63
4.3.1.3 Injector Synchrotron rf Radiation Hazards 4-63
4.3.1.4 Storage Ring rf Hazards 4-64
4.3.2 Laser Hazards 4-64
4.3.2.1 Low-Power Laser Hazards 4-64
4.3.2.2 High-Power Laser Hazards 4-65
4.3.2.2.1 Laser-Controlled Areas 4-65
4.3.2.2.2 Interlocks and Automated Warning Devices 4-65
4.3.2.2.3 Standard Operating Procedures 4-66
4.3.2.2.4 Personal Protective Equipment 4-66
4.3.2.2.5 Posting 4-66
4.3.2.2.6 Training and Medical Requirements 4-66
4.3.2.2.7 Fire Hazards 4-67
4.3.2.2.8 Skin Burn Hazards 4-67
4.3.3 Visible/Ultraviolet Radiation Hazards 4-67
4.3.3.1 LEA Visible/UV Hazards 4-67
4.3.3.2 PAR Visible/UV Hazards 4-68
4.3.3.3 Synchrotron Visible/UV Hazards 4-68
4.3.3.4 Storage Ring Visible/UV Hazards 4-69
4.4 Electrical Hazards 4-70
4.4.1 Linac 4-70
4.4.1.1 Electrical Hazards for the LEA rf Gun Heater Power Supplies 4-70
4.4.1.2 Electrical Hazards for the rf Gun Alpha Magnet Systems 4-71
4.4.1.3 Electrical Hazards for the rf Gun Kicker Magnet Systems 4-71
4.4.1.4 Electrical Hazards for the rf Gun Quadrupole Magnet Systems 4-71
4.4.1.5 Electrical Hazards for the rf Gun Corrector Magnet Systems 4-71
4.4.1.6 Pulsed Klystron and Modulator 4-71
4.4.1.7 Linac Electric Power and Maintenance 4-73
4.4.2 Low Energy Transport (LET) Line 4-73

4.4.2.1 Electrical Hazards for LET Dipole Magnets and Power Supplies 4-74
4.4.2.2 Electrical Hazards for the LEA Vertical Bend Triplet Magnet System 4-74
4.4.2.3 Electrical Hazards for LET Quadrupole Magnets and Power Supplies 4-75
4.4.2.4 Electrical Hazards for the LEA-related Quadrupole Magnet Systems 4-75
4.4.2.5 Electrical Hazards for LET Corrector Magnets and Power Supplies 4-75
4.4.2.6 Electrical Hazards for the LEA-related Corrector Magnet Systems 4-75
4.4.2.7 Electrical Hazards for the LEA Beam Dump Magnet System 4-75
4.4.2.8 Electrical Hazards for LET Injection/Extraction Septum Magnet and Power Supply (PAR) 4-76
4.4.2.9 Electrical Hazards for LET Injection Septum Magnet and Power Supply (Synchrotron) 4-76
4.4.2.10 Electrical Hazards for LET Vacuum Pressure Gauges and Ion Pumps 4-76
4.4.2.11 LET Electrical Power and Maintenance 4-77
4.4.2.11.1 Required to Perform Maintenance on LET Magnet Power Supplies 4-77
4.4.2.11.2 Required to Perform Maintenance on LET Magnets 4-77
4.4.2.12 Required to Operate LET Magnet Systems 4-77
4.4.3 Linac Extension Area (LEA) 4-78
4.4.3.1 Electrical Hazards for the LEA Quadrupole Magnets 4-78
4.4.3.2 Electrical Hazards for the LEA Vacuum Pressure Gauges and Ion Pumps 4-78
4.4.3.3 LEA Electrical Power and Maintenance 4-79
4.4.3.3.1 Required to Perform Maintenance on LEA Magnet Power Supplies 4-79
4.4.3.3.2 Required to Perform Maintenance on LEA Magnets 4-79
4.4.3.4 Required to Operate LEA Magnet Systems 4-79
4.4.4 Particle Accumulator Ring (PAR) 4-80
4.4.4.1 Electrical Hazards for PAR Dipole Magnets and Power Supplies 4-80
4.4.4.2 Electrical Hazards for PAR Quadrupole Magnets and Power Supplies 4-80
4.4.4.3 Electrical Hazards for PAR Sextupole Magnets and Power Supplies 4-81
4.4.4.4 Electrical Hazards for PAR Correction Magnets and Power Supplies 4-81
4.4.4.5 Electrical Hazards for PAR Injection/Extraction Bumper/Kicker Magnets and Power Supplies 4-81
4.4.4.6 Electrical Hazards for PAR Vacuum Pressure Gauges and Ion Pumps 4-82
4.4.4.7 PAR Electrical Power and Maintenance 4-82
4.4.4.7.1 Required to Perform Maintenance on PAR Magnet Power Supply 4-82
4.4.4.7.2 Required to Perform Maintenance on PAR Magnet or rf Cavities 4-82
4.4.4.8 Required to Operate PAR Magnet Systems 4-82
4.4.5 Injector Synchrotron 4-83
4.4.5.1 Electrical Hazards for Synchrotron rf 4-84
4.4.5.2 Electrical Hazards for Synchrotron Dipole Magnets and Power Supplies 4-84

4.4.5.3 Electrical Hazards for Synchrotron Quadrupole Magnets and Powe5 Supplies 4-85
4.4.5.4 Electrical Hazards for Synchrotron Sextupole Magnets and Power Supplies 4-85
4.4.5.5 Electrical Hazards for Synchrotron Correction Magnets and Power Supplies 4-85
4.4.5.6 Electrical Hazards for Synchrotron Injection Kicker Magnet and Power Supply 4-85
4.4.5.7 Electrical Hazards for Synchrotron Extraction Kicker Magnet and Power Supply 4-86
4.4.5.8 Electrical Hazards for Synchrotron Vacuum Pressure Gauges and Ion Pumps 4-86
4.4.5.9 Synchrotron Electrical Power and Maintenance 4-86
4.4.5.9.1 Required to Perform Maintenance on Synchrotron Magnet Power Supply 4-86
4.4.5.9.2 Required to Perform Maintenance on Synchrotron Magnet or rf Accelerating Structure 4-86
4.4.5.9.3 Required to Operate Synchrotron Magnet Systems 4-87
4.4.6 High Energy Transport (HET) Line 4-88
4.4.6.1 Electrical Hazards for HET Dipole Magnets and Power Supplies 4-88
4.4.6.2 Electrical Hazards for HET Quadrupole Magnets and Power Supplies 4-89
4.4.6.3 Electrical Hazards for HET Correction Magnets and Power Supplies 4-89
4.4.6.4 Electrical Hazards for HET Extraction Septum Magnets and Power Supplies (Synchrotron) 4-89
4.4.6.5 Electrical Hazards for HET Injection Septum Magnets and Power Supplies (Storage Ring) 4-90
4.4.6.6 Electrical Hazards for HET Vacuum Pressure Gauges and Ion Pumps 4-90
4.4.6.7 HET Electrical Power and Maintenance 4-90
4.4.6.7.1 Required to Perform Maintenance on HET Magnet Power Supply 4-90
4.4.6.7.2 Required to Perform Maintenance on HET Magnet 4-90
4.4.6.7.3 Required to Operate HET Magnet Systems 4-90
4.4.7 Storage Ring 4-91
4.4.7.1 Electrical Hazards for Storage Ring rf 4-92
4.4.7.2 Electrical Hazards for Storage Ring Dipole Magnets and Power Supplies..
4-92 4.4.7.3 Electrical Hazards for Storage Ring Quadrupole Magnets and Power Supply 4-93
4.4.7.4 Electrical Hazards for Storage Ring Sextupole Magnets and Power Supplies 4-93
4.4.7.5 Electrical Hazards for Storage Ring Correction Magnets and Power Supplies 4-94

4.4.7.6 Electrical Hazards for Storage Ring Injection Bumper Magnets and Power Supplies 4-94
4.4.7.7 Electrical Hazards for Storage Ring Vacuum Pressure Gauges and Ion Pumps 4-94
4.4.7.8 Storage Ring Electrical Power and Maintenance 4-95
4.4.7.8.1 Required to Perform Maintenance on Storage Ring Magnet Power Supply 4-95
4.4.7.8.2 Required to Perform Maintenance on Storage Ring Magnet 4-95
4.4.7.8.3 Required to Operate Storage Ring Magnet Systems 4-95
4.4.7.9 Electrical Hazards for Insertion Devices and Front Ends 4-96
4.4.8 Electrical Hazards for Experimental Beamlines 4-96
4.5 Fire Hazards 4-97
4.6 Vacuum and Pressure Hazards 4-97
4.7 Magnetic Field Hazards 4-99
4.8 Cryogenic Hazards 4-100
4.9 Chemical Hazards 4-100
4.10 Oxygen Deficiency Hazards 4-101
4.11 Noxious Gas Hazards 4-101
4.12 Mechanical Hazards 4-104
4.13 Environmental Hazards 4-107

5.0 SAFETY ENVELOPE 5-1
5.1 Safety Envelope - Technical Requirements 5-1
5.1.1 Linac and LEA 5-4
5.1.2 Particle Accumulator Ring, Low Energy Transport 5-6
5.1.3 Injector Synchrotron, High Energy Transport 5-6
5.1.3.1 Modes of Operation 5-6
5.1.3.2 Limitations to Operations 5-7
5.1.3.3 Losses 5-7
5.1.3.4 Safety Envelope 5-8
5.1.4 Storage Ring 5-8
5.1.4.1 Modes of Operation 5-8
5.1.4.2 Limitations to Operations 5-8
5.1.4.3 Losses 5-9
5.1.4.4 Safety Envelope 5-10
5.1.5 Beamline Safety Envelope 5-10
5.2 Safety Envelope - Administrative Requirement 5-11

6.0 FACILITY OPERATIONS 6-1
6.1 Introduction 6-1
6.2 Conduct of Operations Manual 6-1

7.0 QUALITY ASSURANCE 7-1
7.1 Program Description 7-1
7.2 Design Reviews 7-2
7.2.1 Design Verification and Validation 7-2
7.3 Safety Reviews 7-2
7.4 Testing Procedures 7-2
7.5 Computer Software 7-3

8.0 ENVIRONMENTAL MONITORING PROGRAM 8-1
8.1 Program Description 8-1
8.1.1 Compliance Summary 8-1
8.1.2 Environmental Surveillance Program 8-1
8.2 Monitoring of Radiological and Hazardous Materials in Potential Exposure Pathways 8-2
8.2.1 Air Sampling 8-2
8.2.2 Water Sampling 8-2
8.2.3 Bottom Sediment Sampling 8-3
8.2.4 External Penetrating Radiation 8-3
8.2.4.1 Radionuclides and Off-Site Dose Estimate 8-4

9.0 FACILITY DECONTAMINATION AND DECOMMISSIONING 9-1
9.1 Equipment Inventory 9-1
9.2 Shutdown 9-1
9.3 Survey of Residual Activities 9-1

10.0 REFERENCES 10-1

Addendum 1 ..... A-1

List of Figures

Figure 1.1 Aerial View of the Advanced Photon Source 1-3
Figure 2.1 Risk Determination 2-4
Figure 3.1 Argonne and Chicago Area 3-11
Figure 3.2 APS Site within Argonne 3-12
Figure 3.3 APS Cultural Resources 3-19
Figure 3.4 Upstream Linac Plan View with Both rf Guns and PC Gun in Place 3-22
Figure 3.5 Linac Bunch Compressor 3-30
Figure 3.6 Downstream Linac Plan View 3-32
Figure 3.7 PAR Bypass Beam Transport Line 3-35
Figure 3.8 Booster Bypass Beam Transport Line Schematic including the Intermediate Beam Dump 3-37
Figure 3.9 Schematic of the LEA Beam Transport Line System 3-38
Figure 3.10 Positron Accumulator Ring Plan View 3-40
Figure 3.11 Linac-to-PAR (LTP) Beam Transport Line 3-41
Figure 3.12 PAR-to-Booster (PTB) Beam Transport Line 3-42
Figure 3.13 Location of Beamlines Relative to the PAR 3-43
Figure 3.14 PAR Operating Cycle 3-44
Figure 3.15 Layout of the Injector Synchrotron 3-50
Figure 3.16 Injector Synchrotron Dipole Ramp Cycle 3-52
Figure 3.17 Injector Synchrotron Standard Cell 3-54
Figure 3.18 Layout of the HET Line 3-62
Figure 3.19 Sector Layout of Storage Ring In-Tunnel Components 3-66
Figure 3.20 Storage Ring rf Power System and Waveguide Layout 3-72
Figure 3.21 Waveguide Switching System Schematic 3-73
Figure 3.22 Beam Diagnostics for the APS Storage Ring in the Injection Region 3-75
Figure 3.23 Floor Plan for the 35-BM and 35-ID Diagnostics Beamlines. Beamlines connecting 35-BM-D with 35-BM-C and 35-ID-B with 35-ID-A as well as stations 35-BM-D and 35-ID-B do not exist presently. 3-78
Figure 3.24 Diagnostics Sector BM Beamline Bremsstrahlung Ray-Tracing Analysis 3-79
Figure 3.25 Electron Trajectory through Insertion Device 3-81
Figure 3.26 Typical Insertion Device Assembly and Vacuum Chamber 3-83
Figure 3.27 Insertion Device Vacuum Chamber with Supports 3-85
Figure 3.28 Linac/PAR ACIS Equipment 3-100
Figure 3.29 LEA ACIS Equipment 3-101
Figure 3.30 Synchrotron and RF Area (Zone F) ACIS Equipment 3-102
Figure 3.31 Storage Ring ACIS Zones 3-103
Figure 3.32 Location of Storage Ring Zone-C ACIS Equipment 3-110
Figure 3.33 Typical PLC-Controlled Equipment Interface - Chain A and HW Circuits 3-120

Figure 3.34 Typical PLC-Controlled Equipment Interface - Chain B and HW Circuits 3-121
Figure 3.34a Typcial updated ACIS PLC-Controlled Equipment Interface 3-122
Figure 3.35 Typical Station Control Panel 3-142
Figure 3.36 Typical Shutter Control Logic 3-144
Figure 4.1 Risk Determination 4-4
Figure 4.2 Peak Dose Rates recorded in 1 cc tissue phantoms at the Back of Thick Lead and TungstenTargets Due to the Incident Bremsstrahlung. 4-33
Figure 4.3 Diagram of the Mono-Beam Aperture and Bremsstrahlung Stop Diagram 4-34
Figure 4.4 Diagram of the White-Beam Station of the 1-ID-B Beamline 4-35
Figure 4.5 Layout of Equipment in 1-ID-B (Plan View) 4-37
Figure 4.6 Layout of Equipment in 1-ID-A (Side View) 4-38
Figure 4.7 Bremsstrahlung Ray Trace (Horizontal) 4-41
Figure 4.8 Bremsstrahlung Ray Trace (Vertical, Monochromatic Beam) 4-42
Figure 4.9 Dose Rates Due to the Back Scattering of the Bremsstrahlung from a Thick Lead Target 4-44
Figure 4.10 Schematic of the Geometric Parameters of the Si Mirror Considered for Beamline Shielding 4-45
Figure 4.11 The Results of EGS4 Calculation for SB from a Si Substrate Hit by a PB Beam at an Incidence Angle of 0.15° (Vertical View) 4-46
Figure 4.12 The Results of EGS4 Calculation for SB from a Si Substrate Hit by a PB Beam at an Incidence Angle of 0.15° (Horizontal View) 4-47
Figure 4.13 Diagram of the Configuration Used for the EGS4 Calculation 4-49
Figure 4.14 The EGS4 Results for the Dose Rates in Tissue Due to the Beam Hitting the Downstream Edge of the Collimator 4-50
Figure 4.15 Comparison of PHOTON and PHOTON2 Spectrums for the APS Wiggler A.... 4-56
Figure 5.1 Maximum Radiation Dose in the Klystron Gallery under Nominal Operating Conditions and at the Safety Envelope 5-5

List of Tables

Table 1.1 APS Controlled Activities/Operations Conducted Outside of the 400 Area 1-8
Table 2.1 APS Risk Determination Summary 2-2
Table 2.2 Hazard Probability Rating Levels 2-3
Table 2.3 Hazard Consequence Rating Levels 2-3
Table 3.1 Incremental Population Data 3-13
Table 3.2 Synchrotron Operating Performance Goals 3-49
Table 3.3 Injector Synchrotron Magnet Parameters at 7-GeV Operation 3-53
Table 3.4 Injector Synchrotron Magnet Power Supply Parameters 3-55
Table 3.5 Kicker Magnet and Supply Parameters 3-56
Table 3.6 Septum Magnet and Supply Parameters 3-57
Table 3.7 The rf System Parameters 3-58
Table 3.8 Injector Synchrotron Beam Diagnostic Systems 3-59
Table 3.9 HET Line Magnet Parameters 3-63
Table 3.10 HET Line Beam Diagnostics Systems 3-64
Table 3.11 Nominal Storage Ring Accelerator Operating Parameters 3-67
Table 3.12 Storage Ring Magnet and Power Supply Parameters for 7.0-GeV Operation 3-69
Table 3.13 Parameters of the Storage Ring rf System 3-71
Table 3.14 Storage Ring Beam Diagnostic Systems 3-74
Table 3.15 Summary of ACIS Components 3-111
Table 3.16 Annual Air Emissions 3-153
Table 4.1 Hazard Probability Rating Levels 4-3
Table 4.2 Hazard Consequence Rating Levels 4-3
Table 4.3 Summary of Radiation Dose Rate Calculations 4-6
Table 4.4 Summary of Calculated Average Radiation Dose Rates in Occupied LEA System Areas 4-12
Table 4.5 Unshielded Radiation Dose Rates from the Triple Beam Stop for Electron Operation at the Design Performance Goal (5.4 W) (μSv/h at 1 meter) 4-15
Table 4.6 Summary of Average Radiation Dose Rates in Occupied PAR Areas 4-17
Table 4.7 Unshielded Radiation Dose Rates from the HET Beam Stop for Electron peration at the Design Performance Goal (μSv/h at 1 meter)* 4-19
Table 4.8 Summary of Calculated Average Radiation Dose Rates in Occupied Synchrotron Areas 4-22
Table 4.9 Unshielded Radiation Dose Rates from the Injection Thin Septum for 100% Loss at the Design Performance Goal (μSv/h at 1 meter) 4-24
Table 4.10 Summary of Calculated Average Radiation Dose Rates in Occupied Storage Ring Areas 4-28
Table 4.11 Summary Results for the Mono-Aperture 4-36

Table 4.12 Thickness of the Collar for the Collimators 4-51
Table 4.13 Maximum Total Dose Rates on contact with the FOE wall at the Accelerator Safety Envelope 4-51
Table 4.14 Noxious Gas Average Concentrations 4-103
Table 5.1 Summary of Accelerator Systems Safety and Operating Envelopes 5-3

ACRONYMS

AC	alternating current
ACHP	Advisory Council on Historic Preservation
ACIS	Access Control Interlock System
AES	APS Engineering Support Division
AFG	arbitrary function generator
ALARA	as low as reasonably achievable
ALD	Associate Laboratory Director
ANL	Argonne National Laboratory
ANL-E	Argonne National Laboratory-East (Illinois Site)
ANL-QAPP	Argonne National Laboratory Quality Assurance Program Plan
ANSI	American National Standards Institute
AOP	ASD Accelerator Operations and Physics Grop
APS	(7-GeV) Advanced Photon Source
ASD	APS Accelerator Systems Division
BB	booster bypass line
BM	bending magnet
BNL	Brookhaven National Laboratory
BPLD	Beam Position Limit Detector
BPM	beam position monitor
BCRRT	Beamline Commissioning Readiness Review Team
BLEPS	Beamline Equipment Protection System
BSDRSC	APS Beamline Safety Design Review Steering Committee

BSS	beam shutdown station
BTL	booster-to-LEA
CCD	charge-coupled device
CCTV	closed-circuit television
CLO	central laboratory and office building
COE	(U.S. Army) Corps of Engineers
CPR	cardiopulmonary resuscitation
DAC	derived air concentration
DC	direct current
DCCT	DC current transformer
DD/DH	Division Director/Department Head
DI	deionized water
DOE	(U.S.) Department of Energy
DOT	(U.S.) Department of Transportation
DRG	ANL-E CMT Dosimetery and Radioprotection Group
EAA	Experiment Assembly Area
EEPROM	electrically erasable, programmable, read-only memory
EHCP	experiment hazard control plan
EPA	(U.S.) Environmental Protection Agency
EPICS	Experimental Physics and Industrial Control System
EPS	Equipment Protection System
EQO	ESH/QA Oversight
ESAF	experiment safety assessment form
ESH	Environment, Safety and Health Division (at ANL-E)

ESH-AC	ANL-E Environment, Safety, and Health Analytical Chemistry Laboratory (in CMT)
ES&H	Environment, Safety and Health
FE	front end
FEEPS	Front-End Equipment Protection System
FIFO	first in, first out
FGE	Fissile Grams Equivalent
FOE	first optic enclosure
FWHM	full width at half maximum
FWS	(U.S.) Fish and Wildlife Service
GB	gas bremsstrahlung
GRN	giant resonance neutron
HET	high energy transport (line)
HV	high voltage
HVAC	heating, ventilating, and air conditioning
HVPS	high voltage power supply
ICT	integrating current transformer
ID	insertion device
IEPA, Illinois EPA	State of Illinois Environmental Protection Agency
IHPA	Illinois Historic Preservation Agency
IPNS	Intense Pulsed Neutron Source
IR	infrared
IS	injector synchrotron
ISA	Instrument Society of America
ISHPO	Illinois State Historic Preservation Officer

I/O	input/output
ITS	injector test stand
LCA	laser-controlled area
LEA	Linac Extension Area
LED	light-emitting diode
LEP	Large Electron-Positron Storage Ring
LET	low energy transport (line)
LEUTL	low-energy undulator test line
linac	linear accelerator
LOM	laboratory-office module
LOTO	lock-out/tag-out
LTL	linac-to-LEA
LSO	laser safety officer
LTP	linac-to-PAR
LVDT	linear voltage differential transducer
MCI	maximum credible incident
MCR	main control room
MIT	Massachusetts Institute of Technology
MPEOB	magnet power emergency off button
MSDS	material safety data sheet
NBS	National Bureau of Standards
NCRP	National Council on Radiation Protection
NEG	nonevaporable getter
NEMA	National Electrical Manufacturers' Association
NEPA	National Environmental Policy Act

NESHAP	National Emission Standards for Hazardous Air Pollutants
NFPA	National Fire Protection Association
NIST	National Institute of Standards and Technology
NOAA	National Oceanic and Atmospheric Administration
NPDES	National Pollutant Discharge Elimination System
NSLS	National Synchrotron Light Source (at BNL)
OFHC	oxygen-free high-conductivity
OSHA	(U.S.) Occupational Safety and Health Administration
OTR	optical transistion radiation
PAR	particle accumulator ring
PB	PAR bypass line (Chapter 3)
PB	primary bremsstrahlung (Chapter 4)PBPM photon beam position monitor
PC	personal computer
PC gun	photocathode gun
PEP	Positron-Electron Project
PFN	pulse forming network
PLC	programmable logic controller
PSAR	Preliminary Safety Analysis Report
PSS	personnel safety system
PTB	PAR-to-booster
PVC	polyvinyl chloride
QA	quality assurance
QMS	(DOE) Quality Management System
RAM	random access memory

RCRA	Resource Conservation and Recovery Act
rf	radio frequency
RFBPM	radio-frequency beam position monitor
RFG	rf gun
RGA	residual gas analyzer
RMA	Radioactive Material Area
ROM	read-only memory
SAD	safety assessment document
SASE	self-amplified spontaneous emission
SB	secondary bremsstrahlung
SCR	silicon-controlled rectifier
SDWA	Safe Drinking Water Act
SEV	storage ring exit value
SI	AES Safety Interlocks Group
SLAC	Stanford Linear Accelerator Center
SLED	SLAC Energy Doubler
SOC	APS Safety Overview Committee
SOP	standard operating procedure
SR	storage ring
SQA	software quality assurance
TLD	thermoluminescent dosimeter
TLV	threshold limit value
TWA	time-weighted average
TTL	transistor-transistor logic
UES	AES User ESH Support Group

UHV	ultra-high vacuum
UPS	uninterruptible power supply
USDA	U.S. Department of Agriculture
UV	ultraviolet
VUV	vacuum ultraviolet
WBE	white-beam enclosure
XOR	XSD/X-ray Operations and Research organization
XSD	X-ray Science Division

UNIT ABBREVIATIONS

Symbol	Name
A	ampere
Bq	bequerel
C	coulomb
°C	degree Celsius
Ci	curie
cm	centimeter
°F	degree Fahrenheit
ft	feet
G	gauss
gal	gallon
GeV	gigaelectronvolt
GBq	gigabequerel
gpm	gallons per minute
Gy	gray
h	hour
ha	hectare
Hz	hertz
in	inch
J	joule
kA	kiloampere
keV	kiloelectronvolt
kg	kilogram
kHz	kilohertz
km	kilometer
kPa	kilopascal
kV	kilovolt

Symbol	Name
kVDC	kilovolt direct current
kW	kilowatt
m	meter
ℓ	liter
mA	milliampere
MBq	megabequerel
MeV	megaelectronvolt
mGy	milligray
MHz	megahertz
min	minute
mm	millimeter
mph	miles per hour
mrem	millirem
ms	millisecond
mSv	millisievert
MVA	megavolt-ampere
MW	megawatt
µA	microampere
µC	microcoulomb
µGy	microgray
µm	micrometer
µPa	micropascal
µs	microsecond
µSv	microsievert
nm	nanometer
ns	nanosecond
nTorr	nanotorr
Pa	pascal

Symbol	Name
psi	pounds per square inch
psig	pounds per square inch gauge
rad	rad
rem	rem
s	second
Sv	sievert
T	tesla
TBq	terabequerel
Torr	torr
V	volt
VAC	volts alternating current
VDC	volts direct current
W	watt
yr	year

ABSTRACT

This Safety Assessment Document (SAD) addresses commissioning and operation of the APS injector, storage ring, and x-ray beamlines which are made up of:

- A 550-MeV electron linear accelerator (linac)
- A linac extension area (LEA)
- A low-energy transport (LET) line
- A 450-MeV particle accumulator ring (PAR)
- A 325- to 7000-MeV injector synchrotron
- A high-energy transport (HET) line
- A 7-GeV storage ring, including insertion devices and x-ray front ends
- The x-ray beamlines

The purpose of this document is to identify and describe the hazards associated with commissioning and operation of the accelerators and beamlines listed above, and to document the measures taken to minimize these hazards and mitigate their consequences.

The potential hazards associated with the commissioning and operation of the APS facility have been carefully identified and analyzed. Physical and administrative controls mitigate identified hazards. No hazard exists in this facility that has not been previously encountered and successfully mitigated in other accelerator establishments. This document had its origin as the APS Preliminary Safety Analysis Report (PSAR). During the review of the PSAR in February 1990, the APS was determined to be a Low Hazard Facility. On June 14, 1993, the Acting Director of the Office of Energy Research endorsed the designation of the APS as a low-hazard facility, and this Safety Assessment Document supports that designation.

This APS Safety Assessment Document supersedes the APS Safety Assessment Document dated July 2006 (ANL 2006).

1.0 INTRODUCTION

1.1 Objective of Document

This APS Safety Assessment Document (SAD) covers the Advanced Photon Source injector, storage ring, and x-ray beamlines. Its predecessor, the APS Final Safety Assessment Document (ANL 1996) combined the Advanced Photon Source Accelerator Systems Safety Assessment Document (ANL 1994a) and the APS Experimental Beamline SAD (ANL 1995), and included the text of both SADs with only minor modifications. The Accelerator Systems SAD was approved by the U.S. Department of Energy (DOE) and the Laboratory Director, and permission to start storage ring commissioning was granted by A. Taboas of the DOE Argonne Area Office in February of 1995. The Experimental Beamline SAD was approved in March of 1996. In March 1998, the APS Safety Assessment Document was revised to include "top-up" operation of the storage ring and Linac Extension Area (LEA). The original SAD was prepared in accordance with DOE Order 5480.25, "Safety of Accelerator Facilities" (DOE 1992b). In 2004 and again in 2006, the APS Safety Assessment Document was revised to address minor changes in operational procedures and to provide more detailed facility descriptions in an effort to keep the SAD current.

The purpose of this SAD is to demonstrate that the hazards posed by the APS facility functioning at its safety envelope are acceptable and in compliance with existing applicable DOE Orders and guidelines, and statutes of the State of Illinois.

The document provides the results of a systematic effort to identify hazards associated with the operation of the APS facility, primarily the accelerator systems and x-ray beamlines, and it describes the measures taken to control and/or mitigate these hazards. The document evaluates the probability, risk, and potential consequences posed by the APS to the public, facility workers, and the environment. It addresses both normal and abnormal operating conditions. The SAD also defines the operating and safety envelopes for the APS accelerator systems and the safety envelope for the APS x-ray beamlines. The assessment of hazards in this document is based on the assumption that the facility is performing at the maximum energy levels allowed by the safety envelope, thus guaranteeing that the hazard and risk assessments of the SAD evaluate worst-case conditions.

1.2 Advanced Photon Source Facility Description

The Advanced Photon Source was designed to be a major national user facility providing high-brilliance x-ray beams for users from Argonne National Laboratory, other national laboratories, academic institutions, governmental bodies, and industrial firms. Synchrotron radiation emitted by circulating electron beams has come into wide use as a powerful, versatile source of x-rays for probing the structure

of matter and for studying various physical and chemical processes. Many dedicated synchrotron radiation facilities are now in routine operation throughout the world.

Figure 1.1 shows an aerial view of the Argonne 400 Area. The APS facility is defined as being those APS activities, operations, and physical systems within all the named features with the exception of the Center for Nanoscale Materials and the Advanced Protein Characterization Facility. The main feature of the APS facility is the experiment hall building, Building 400, an annular structure with an exterior radius of 191.4 meters, an inner radius of 164.6 meters and a height of 9.8 meters. The experiment hall building houses the experiment hall, where x-ray beamlines and experimental equipment are located, and a storage ring contained within a concrete-shielding enclosure. Around the periphery of the experiment hall building are laboratory and office modules (LOMs), Buildings 431-438, that provide office and laboratory space for visiting scientists performing experiments at the APS. A central laboratory and office building (CLO), Building 401, is located at the northern periphery of the experiment hall building. The CLO houses the facility staff, who are responsible for operating and maintaining the facility and supporting the experimental program.

Adjoining the CLO is the multi-function wing, Building 402, providing facilities for meetings and conferences. Separating the CLO from the experiment hall building is the control center, which provides a central location for controlling the operation of the facility. To the southeast of the CLO is the utility building, Building 450, which provides the electrical power, deionized water, and other utilities for the APS facility.

Building 440, the Center for Nanoscale Materials (CNM), lies adjacent to the APS facility, but its operations are not essential to APS operations and its activities and systems are not under the direct control of APS personnel. As such, the CNM is not considered to be part of the APS facility. There is an x-ray beamline operated by the CNM that is within the APS facility as it is located inside Building 400 and must be operated within requirements set by APS staff.

Building 446, the Advanced Protein Characterization Facility, also lies adjacent to the APS facility. Its operations are not essential to APS operations, its activities and systems are not under the direct control of APS personnel, and Building 446 is not considered to be part of the APS facility. An enclosed corridor connects Building 446 to Building 400 so that protein samples can be rapidly transported to an x-ray beamline for study.

The storage ring is contained within a concrete-shielding enclosure located at the inner radius of the experiment hall building. The storage ring consists of magnets, vacuum systems, and other equipment necessary to maintain the circular orbit and energy level of a beam of electrons that is circulating within the storage ring. As the electrons are bent around the circular orbit, they release energy in the form of x-rays.

The x-ray production can be greatly enhanced by the inclusion of magnetic insertion devices in the storage ring. The two basic types of insertion devices that presently exist are wigglers, which produce very intense x-ray radiation over a wide range of energies, and undulators, which yield x-ray radiation over a narrow energy range at high brilliance. The x-rays are transmitted from the storage ring through a front end, which provides a means for defining and/or stopping the x-ray beam before the x-ray beam enters the x- ray beamline. The x-ray beamline is located in the experiment hall, between the outside of the concrete-shielding enclosure and the outer wall of the experiment hall building. The beamlines include shielded enclosures, vacuum systems, optical elements and x- ray apparatus that contain the beam, modify its properties, and provide the apparatus for conducting experiments.

The electrons within the storage ring are continually "lost" at a low rate due to interactions with gas molecules and other loss mechanisms, and need to be restocked at a regular rate. The supply of electrons is provided by the APS injector system, consisting of the linac system, a particle accumulator ring (PAR), a 7-GeV synchrotron, and associated beam transfer lines.

Figure 1.1 Aerial View of the Advanced Photon Source

The APS linac system consists of one or more electron guns followed by a pair of electron linear accelerators capable of operating at a combined energy of 550 MeV. The linac is capable of accelerating a bunch of particles at a repetition rate of up to 60 Hz.

The particle accumulator ring accepts up to 24 pulses of electrons from the linac at an energy up to 450 MeV and stores them for approximately 100 milliseconds. During this storage period, the circulating electrons are collected into a bunch with length and transverse profiles suitable for efficient capture by the injector synchrotron. The PAR transfers its electrons to the injector synchrotron every 500 milliseconds.

The injector synchrotron accelerates (or “boosts”) the electrons from the PAR to the operating energy of the storage ring, 7 GeV. After transferring its beam to the storage ring, the synchrotron is reset to accept another bunch of electrons from the PAR. The acceleration/transfer/reset sequence takes place in 500 milliseconds, during which the PAR has collected another bunch of electrons for injection to the synchrotron.

The APS injector is capable of filling the storage ring in less than one minute. Without refilling, the storage ring will lose its stored beam over a period of time. The original operating routine at the APS was to allow the beam to circulate and decay until about half of the injected current remained. Then the ring was refilled to maximum operating current. All x-ray experiments were interrupted during the injection process, and x- ray beamline shutters were closed. In this operating routine the injector was used for filling the storage ring just a few minutes each day.

Presently, APS is mostly operated in “top-up” mode, with small quantities of beam injected throughout the day, without closing x-ray beamline shutters. Based upon operational requirements, a small quantity of beam is periodically injected into the storage ring to keep the stored current nearly constant.

The linac, PAR, synchrotron, and storage ring are connected by transport lines with bending and focusing magnets and an evacuated beam pipe to guide the electron beam from one ring to another. The linac, PAR, and synchrotron are connected by the low energy transport line (LET). It is natural to subdivide the LET into that part of the line which connects the linac to the PAR (LTP) and the remainder of the LET which takes beam from the PAR to the “booster” synchrotron (PTB). The 7-GeV beam from the synchrotron passes through the high energy transport line (HET) to the storage ring. Another portion of the LET transports the linac beam directly to the final portion of the PTB for direct injection from the linac to the synchrotron or for transport to the LEA, bypassing the PAR.

The electron guns and linac-are located within a concrete-shielding enclosure located inside the linac building, Building 411. The building also contains the support

equipment for the technical components within the concrete enclosure. An adjoining building, Building 412, the synchrotron injection building, contains the shielded enclosure for the PAR and a section of the synchrotron. The remainder of the building is occupied by ancillary equipment.

The injector synchrotron is housed in a buried tunnel known as the synchrotron enclosure, or Building 415. The HET line passes from this tunnel to the storage ring tunnel beneath the rf/extraction building, Building 420.

The 1104-m circumference, 7-GeV APS storage ring is located inside a shielded enclosure which in turn is housed within the annular experiment hall, Building 400.

1.3 Scope of Document

This document primarily covers the following accelerators, transport lines, beamlines, and associated electrical and mechanical systems:

- 230-MeV upstream electron linac
- 340-MeV downstream electron linac
- low-energy transport lines (LET)
  - from linac to PAR (LTP)
  - from PAR to “booster” (PTB)
  - from linac to booster and LEA (LTL)
- 450-MeV particle accumulator ring (PAR)
- Linac Extension Area (LEA)
- 450- to 7000-MeV injector (“booster”) synchrotron
- high-energy transport line (HET)
- 7-GeV storage ring
- insertion devices
- front ends
- x-ray experiment beamlines on the experiment hall floor

It provides an assessment of the hazards associated with both commissioning and subsequent operation of the accelerators and beamlines listed above. This document

comprehensively evaluates all hazards associated with commissioning and operation of APS accelerator facilities as well as those hazards in the experiment hall entailed in commissioning and operation of x-ray beamlines.

- The accelerator hardware mentioned above is housed in the following APS buildings (see Figure 1.1):

- Building 411, the linac wing, contains the electron linac as well as part of the LTP line.

- Building 412, the injection wing, houses the PAR, part of the LTP, and part of the PTB.

- Building 413, the LEA wing, houses the Linac Extension Area.

- Building 415, the synchrotron enclosure, contains the injector synchrotron, the LTL, part of the PTB, and part of the HET.

- Building 400, consisting of the Experiment Assembly Area and the experiment hall, and containing the storage ring tunnel.

- Building 420, the rf/extraction building, houses some of the power supplies, rf systems, and controls' electronics for the synchrotron and storage ring. It is located above that part of the synchrotron where the 7-GeV beam is extracted and enters the HET. This building houses four rf power sources and associated equipment for the storage ring, one identical rf power source, somewhat different associated equipment dedicated to the synchrotron, and an rf test stand.

Building 450, the utility building, houses the heating, ventilating, and air conditioning (HVAC) system for the entire 400-area complex, as well as the water cooling and de-ionization plant that services the accelerator systems' cooling requirements. Hazards within this building are addressed in this document only to the extent that they are directly connected with operation of the accelerators.

The configuration of the storage ring permits a total of 70 ports to provide x-ray radiation to beamlines in the experiment hall. Thirty-five ports provide the x-ray radiation from insertion devices. The remainder use x-ray radiation produced by the storage ring dipole magnets. Each beamline can be unique and utilizes components that provide the best match between the type of radiation source, the required characteristics of the x-ray radiation, and the type of experiments to be performed on the particular beamline.

Additional APS operations occur in buildings outside of the 400 area. Table 1.1 lists these buildings and their associated APS-controlled activities and operations.

This document describes the components and hazards associated with the commissioning and operation of a "generic" or representative example of a beamline using a storage ring dipole as the x-ray radiation source. The document explains the guidance and requirements that are placed by the APS on the users, the process by which users gain access to the APS for performing experiments at the APS, and the review process by which the APS facility ensures that all specific hazards for each beamline are identified, analyzed, and appropriately mitigated. The document does not attempt to discuss the actual experiments that will be performed by users on the beamlines. The diversity and complexity of the individual experiments cannot be adequately analyzed and presented in this type of document. A process and procedures already exist within Argonne for reviewing and approving experiments that are performed in laboratory conditions. This SAD treats the APS facility and beamline as the laboratory environment consisting of an x-ray generator and appropriate ancillary equipment and provides a safety assessment of this laboratory environment.

The hazards associated with creating a beamline opening in the storage ring enclosure and transporting a photon beam through the opening and down the beamline are also addressed, as are the hazards associated with beamline equipment. Under the beamline operating conditions, as described in section 4.2.6.4, a situation cannot occur that would exceed the Maximum Credible Incident (MCI) scenario for the storage ring and experiment hall. This section discusses a beamline worst-case scenario of a loss of vacuum incident in the storage ring and the resulting consequences in the beamline.

Site access, together with the vehicle tunnel under the experiment hall building, is included in the analyses for safety access. Routine hazards, which are normally accepted without question, are not addressed in this document. These include hazards associated with vehicular traffic, nonhazardous material, machine shops, etc.

In addition to this SAD, the Advanced Photon Source Conduct of Operations Manual (ANL 2001) implementing DOE Order 5480.19 (DOE 2001c) was produced specifically for APS operations. A brief outline of the APS Conduct of Operations Manual is included as Chapter 6 of this SAD.

Table 1.1 APS Controlled Activities/Operations Conducted Outside of the 400 Area

Building	Division	Room	Activity/Operation
314	ASD	Hi Bay and Offices	Fabrication and testing of undulators and associated components and magnetic devices. Storage of various components, usually not crated, which may include metal items from accelerator tunnel spaces.
335	AES, ASD	Hi Bay and Offices	Storage of large crated items. No fabrication activities.
362	AES, XSD	B002 / Basement	Limited component fabrication and workshop activities and storage
364	ASD, XSD	3rd & 4th floors	Storage of various components, usually not crated.
378	AES, ASD	Hi Bay	Storage of various components, usually not crated, including a posted Radioactive Material Area (RMA) used to store components with measureable activation resulting from accelerator operation. Also has a furnace occasionally used for epoxy potting of smaller components. Limited component fabrication may occur here on an infrequent basis.
382	AES	Hi Bay	Fabrication and treatment of various vacuum and mechanical components. Contains a machine shop used to support these activities. Limited component storage.
360	AES, ASD	IPNS A201, G218 & Lab	Storage
365	AES	IPNS ring	Storage, Kicker Supply Development
369	ASD	Hi Bay	Storage, RF components
385	AES	Stand Alone Wing	Survey & Alignment Equipment

1.4 Document Layout

The layout of this document follows the original Guidance for DOE Order 5480.25 issued in September 1993 and is defined below:

Chapter 2	Contains a summary and conclusions of the safety analyses and safety envelope for the APS injector, storage ring, and x-ray beamlines.
Chapter 3	Provides a detailed description of the APS site and the design criteria and operating characteristics of the APS injector, storage ring, and x-ray beamlines.
Chapter 4	Provides the hazard analysis for the APS injector, storage ring, and x-ray beamlines.
Chapter 5	Provides the Safety Envelope for the APS injector, storage ring, and x-ray beamlines.
Chapter 6	Discusses APS Facility Operations and includes a brief outline of the Conduct of Operations Manual.
Chapter 7	Discusses the Quality Assurance Program for the APS.
Chapter 8	Discusses the Environmental Monitoring Program for the APS.
Chapter 9	Provides a decommissioning and decontamination plan for the APS.
Chapter 10	References

2.0 SUMMARY AND CONCLUSIONS

2.1 Hazard Analysis Methodology

The hazard analysis process began with a study of potential hazards associated with the APS facility and generic x-ray beamlines, including radiation, energy sources, hazardous materials and natural phenomena. Credible hazards with potential on-site or off-site consequences were analyzed to assess associated risk. The analyses were based on a bounding event approach. The most severe case of each category was analyzed to identify the worst-case result. Each event analysis included determination of the initiating occurrence, possible detection methods, safety features that could prevent or mitigate the event, probability of occurrence, and the possible consequences.

2.2 Summary of Results

Analyses according to the hazard analysis methodology described in Chapter 4 were carried out for various categories of hazards. Table 2.1 summarizes the results of the analyses. The probability and consequence levels are presented in Table 2.2 and Table 2.3, respectively. The risk determination methodology is shown in Figure 2.1.

An important result of this safety assessment is the establishment of the safety envelope for the components of the APS. In the operating range of the APS, the maximum radiation dose rate increases as particle beam power increases in each of the injector components. For this reason, the safety envelope for injector components has been defined in terms of maximum beam power. The safety envelope for the storage ring in injection mode is also defined in terms of maximum beam power. In stored beam mode, the storage ring safety envelope is related to loss of the entire beam, and is therefore defined in terms of the maximum stored energy in the beam, measured in joules. The maximum credible incident (MCI) for each component of the APS is discussed in Chapter 4. The safety envelope is discussed in detail in Chapter 5.

Other potential hazards have been analyzed and appropriate design or administrative controls have been developed to mitigate them. Procedures and methodologies for controlling these hazards have been drawn from the broad experience base gained through the operation of similar facilities and from available, published accelerator safety guidelines. External experience and expertise was utilized in the original design and safety reviews in accordance with DOE Order 5480.25 (DOE 1992b); and continues in accordance with DOE Order O 420.2A (DOE 2001a). Resulting nonradiation hazards associated with these operations have also been addressed. Control measures were incorporated into the facility and systems designs to mitigate or eliminate all identified potential hazards. In some cases, administrative procedures

were established to ensure that facility operations could be conducted in accordance with DOE O 420.2A (DOE 2001a).

Table 2.1 APS Risk Determination Summary

HAZARD (off-Normal)	**SECTION in SAD**	**PROBABILITY LEVEL**	**CONSEQUENCE LEVEL**	**RISK LEVEL**
Ionizing Radiation				
Accelerator Systems	4.2	Low	Low	ExtremelyLow
X-ray Beamlines	4.2	Low	Medium	Low
Nonionizing Radiation	4.3	Extremely low	Low	Extremely Low
Electrical	4.4	Low	Medium	Low
Fire	4.5	Medium	Low	Low
Vacuum and Pressure	4.6	Medium	Low	Low
Magnetic Fields	4.7	Low	Low	Extremely Low
Cryogenic	4.8	Low	Low	Extremely Low
Chemical	4.9	Medium	Low	Low
Oxygen Deficiency	4.10	Extremely low	Medium	Extremely Low
Noxious gases				
Accelerator Systems	4.11	Medium	Low	Low
X-ray Beamlines	4.11	Low	Medium	Low
Mechanical	4.12	Medium	Low	Low
Environmental	4.13	Low	Medium	Low

Table 2.2 Hazard Probability Rating Levels

Category	**Estimated Range of Occurrence Probability (per year)**	**Description**
High	>10-1	Event is likely to occur several times during the facility or operation lifetime.
Medium	10-2 to 10-1	Event may occur during the facility or operation lifetime.
Low	10-4 to 10-2	Occurrence is unlikely or the event is not expect ed to occur, but, may occur during the life of the facility or operation.
Extremely Low	10-6 to 10-4	Occurrence is extremely unlikely or the event is not expected to occur during the life of the facil ity or operation. Events are limiting faults con sidered in design.
Incredible	<10-6	Probability of occurrence is so small that a rea sonable scenario is inconceivable. These events are not considered in the design or SAD accident analysis.

Table 2.3 Hazard Consequence Rating Levels

Consequence Level	**Maximum Consequence**
High	Serious impact on-site or off-site. May cause deaths or loss of the facility/ operation. Major impact on the environment.
Medium	Major impact on-site or off-site. May cause deaths, severe injuries, or severe occupational illness to personnel or major damage to a facility/ operation or minor impact on the environment. Capable of returning to operation.
Low	Minor on-site with negligible off-site impact. May cause minor injury or minor occupational illness or minor impact on the environment.
Extremely Low	Will not result in a significant injury or occupation illness or provide a significant impact on the environment.

Figure 2.1 Risk Determination

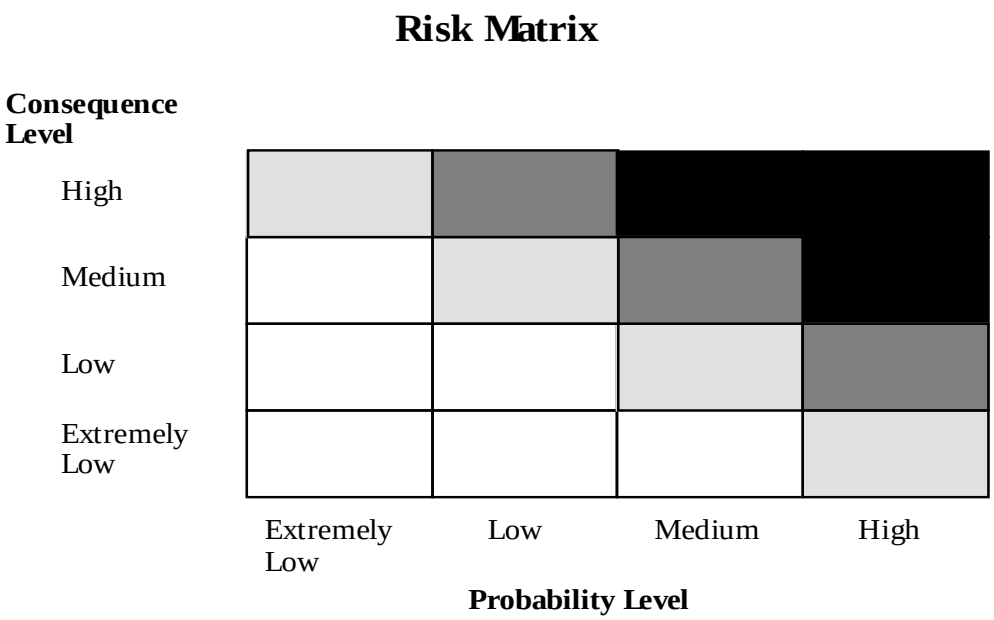

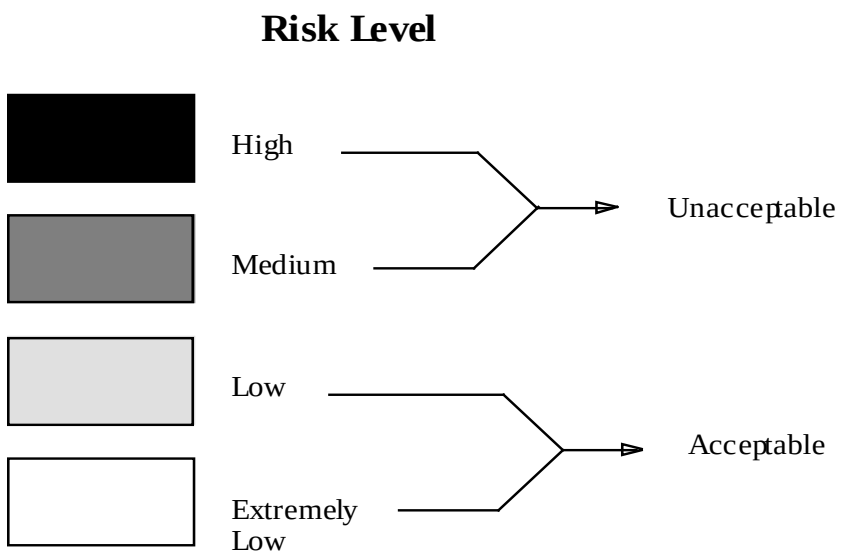

3.0 APS FACILITY, SITE AND OPERATIONS DESCRIPTION

3.1 Policy and Organization

3.1.1 APS Safety Policy

It is the policy of Argonne National Laboratory that its activities be conducted in a manner such that all reasonable measures are taken to protect the health and safety of employees and the public and to minimize accidental damage to property and the environment. The laboratory will comply with the health and safety policy regulations and requirements of the Department of Energy and other applicable government agencies as directed by DOE. All pertinent aspects of DOE Order 5480.25 (DOE 1992b) were taken into account in setting the APS safety policy. All designs, construction, and operation of APS facilities are now governed by DOE Order O 420.2A (DOE 2001a) requirements and guidance.

Safety at Argonne National Laboratory is a line responsibility extending from the director to all employees and users. APS management is fully aware of its responsibility to conduct operations in a manner that reduces the risk of injury and potential harm to personnel, property, the public, and the environment. Operations believed to be unsafe or not in compliance with established safety procedures will not be permitted to proceed. It is APS policy that new or modified systems must be reviewed for safe operations by an APS or external safety committee before authorization is given by the appropriate division director or his designee to energize the system.

The Advanced Photon Source safety policy is to give priority to environment, health, and safety concerns in its operations and to operate within DOE requirements. The APS facility was designed to the following criteria to minimize safety risks to employees and visitors.

- The APS has a reasoned combination of active, passive, and administrative measures appropriately designed and used to:

  1. Maintain personnel exposure to prompt ionizing radiation well below radiological standards and as low as reasonably achievable; and

  2. Permit bypassing in whole or in part only by means that are stringently controlled.

- The facility shall document and implement a plan for control of access to the facility during commissioning, during operations, and while nonoperational.

- APS will provide for the protection of personnel by having the following in place:

1. Physical barriers and/or radiation detectors, interlocked with the particle beam or other protective features as feasible, will be used to prevent exposure of personnel in excess of the most current DOE standards for ionizing and nonionizing radiation and other injurious environments.

2. Escort all persons entering areas of the facility where technical systems are present unless they have received those portions of the general safety orientation and facility-specific training necessary to ensure they can safely accomplish their respective missions.

3. A written statement of the shielding policy for ionizing and non-ionizing radiation.

4. A documented personnel dosimetry program.

5. Characterize, post, periodically monitor, and document the hazardous environments in and around the facility.

6. Determine and document the adequacy of the shielding and other components of the personnel protection ssytem prior to initial use and after significant modifications. This requirement shall include the capability of the system to handle the effects of errant particle beams and interceptions of the beam.

- A review of the provisions for personnel safety and health shall be conducted prior to the energization of any new or modified equipment.

- Accelerator operation shall be conducted in accordance with written procedures that will assure the safety and health of persons and the safe operation ofequipment. The procedures shall be kept current and shall be approved by the line management. The procedures shall be critically reviewed prior to approval and at intervals not to exceed 3 years thereafter to reaffirm their continued validity.

- Routine operation of accelerators shall be executed only by trained and qualified operatiors, or by trainees under the direct supervision of a qualified operator.

- During commissioning of accelerator components and during development programs employing an accelerator, the particle beam shall be controlled only by trained and qualified operators or duly designated accelerator specialists and physicists.

- Experimenters at the facility shall adhere to written and approved safety procedures that address environmental, safety, and health concerns identified by a safety analysis.

- Accelerator development programs that have a potential to exceed the approved Accelerator Safety Envelope shall be permitted only after a review conducted and documented by the contractor has found the proposed safety and health precautions to be taken during the development activities are adequate.

An important part of the APS safety policy is to implement an ALARA program for radiation exposure. ALARA goals for APS personnel are set each year, and every effort is made in the operation of the APS to ensure that these goals are met.

3.1.2 Argonne and APS Organizations

Argonne National Laboratory, operated by UChicago Argonne LLC for the U.S. Department of Energy under Contract No. DE-AC02-06CH11357, is the institution designated by DOE as responsible for the design, construction, commissioning and operation of the APS.

The Director of the Advanced Photon Source is responsible for the development and operation of the APS as a national user facility. The Director of the APS also provides overall scientific and managerial leadership for the APS organization and has line responsibility for all aspects of safety within the organization.

The responsibility for the implementation of the safety program has been delegated to divisional line management, managers, and the staff. The Director of the APS has appointed an Environment, Safety, and Health Program Manager to advise him to guide the APS Divisions in their respective safety efforts.

The APS has three divisions:

X-ray Science Division (XSD): XSD manages a multisector, multidiscipline, synchrotron radiation research program. The Division's X-ray Operations and Research (XOR) organization operates the DOE-funded, APS-managed beamlines. XSD also provides beamline technical services and administrative support to the APS user community as a whole.

Accelerator Systems Division (ASD): ASD provides for the reliable operation of the APS accelerator technical systems for the benefit of the user community. In addition, ASD supports a program of research and development in accelerator science and technology.

APS Engineering Support Division (AES): AES provides the common support services for the accelerator systems, the APS plant, and the beamlines. AES's mechanical groups provide the engineering and maintenance support, the Division's computer support groups develop and maintain the APS computing infrastructure and the interlocks group provides design, installation and maintenance of radiation safety and equipment protection systems. The User ESH Support Group, lead by the User Safety Officer, is also part of AES.

The APS Safety Overview Committee (SOC) consisting of APS Division Directors and the APS ESH/QA Program Manager monitors safety performance at the APS and oversees the activities of the other APS safety committees. The role of this committee is to establish safety policies for the management of activities within the APS and to address short-term safety problems not covered by the existing committee structure. To this end the SOC will commission ad hoc safety committees to conduct specific assessments as deemed necessary.

3.1.3 APS Users

The x-ray experimental facilities of the APS are available to a community of researchers that comes from within Argonne and from external research organizations. *User* is a collective term that refers to anyone who participates in synchrotron radiation-based research activities at the APS. Users include: researchers from Argonne and non-Argonne organizations; on-site beamline support personnel; researchers who remotely run experiments at the APS; and researchers who send samples to the APS for analysis. Users access the APS through their associations with the groups that manage the beamlines and through scientific proposal-based processes.

Though users have a variety of affiliations and apply a variety of methodologies using a variety of experimental equipment, to ensure the safety of user operations, users are required to meet the APS/Argonne standards (Argonne Laboratory Management System) for safety for their specific activities at the APS. Their on-site activities are analyzed for potential hazards, and the risks of their activities are mitigated to levels acceptable to APS/Argonne. Elements of the hazard analysis and identification of controls include: beamline-specific ESH programs; design and readiness reviews of experimental facilities constructed by/for the users; analysis of each experiment for hazards and controls; and required registration of users with the APS and completion of APS/Argonne-provided safety training tailored to their activities.

3.1.3.1 User Access and Safety Training

All APS users are required to register with the APS and receive APS-provided orientation before they receive an Argonne/APS access badge. In addition, before they can begin hands-on work at the APS, users also complete site-specific orientations and ESH training for the hazards that are associated with their work at the APS.

3.1.3.2 Sector Safety Plans

Each group that manages a beamline at the APS is responsible for providing a safe workplace and for working in an environmentally sound manner. To achieve this end, each of these organizations manages the risks its activities pose to personnel, the environment, and APS facilities by anticipating, identifying, and evaluating hazards

and then doing what is needed to reduce recognized risks to acceptable levels and to satisfy applicable safety standards. These efforts are referred to as the organization's safety program and the document describing the program is referred to as the organization's safety plan. The plan commits the team to conduct its activities in a manner that conforms to the environment, safety, and health requirements of Argonne and the APS; and includes the identification of key roles in the safety program and identifies the individuals assigned to the roles. The plans are reviewed and approved by the APS, and the sector's implementation of the plan is periodically reviewed by the APS.

3.1.3.3 User Experiment Safety Review

Using the APS web-based system, researchers are required to define the scope of all of their beamline-related experimental activities at the APS; to prepare an experiment safety assessment form (ESAF) and submit an experiment hazard control plan (EHCP).

The APS and the beamline management authorize an experiment to be conducted only after the the experiment has been defined, hazards have been identified, and adequate hazard controls have been implemented.

No experimental activities may be started at the APS without: 1) approval of the EHCP by the beamline management and the APS, and 2) the verification of safeguards as specified in the EHCP. At the beginning of the experiment an experiment authorization form must be posted at the beamline end cabinet and an EHCP must be posted at the experiment station.

Beamline management and the APS work together as partners in the review process to ensure that a safe working environment is maintained at the APS.

3.1.4 Beamline Review and Commissioning

The designs of each beamline are reviewed according to APS design review procedures to ensure they meet APS/Argonne and DOE requirements for safe operations. The reviews are coordinated by the Photon Sciences Design Review Committee (PDRC). The PDRC is a standing committee that calls upon APS technical advisory panels as well as advisors from other areas of the Laboratory when adequate expertise does not exist within the APS. TheCommissioning Readiness Review Team (CRRT) reviews the readiness of the beamline to begin commissioning. The CRRT ensures that any outstanding issues identified in the design review have been resolved and that all required safety components and/or systems are in place and functional. The PDRC and the CRRT report to and advise the AES Division Director and Deputy ALD for Operations, respectively, who have the final APS responsibility for approving the commissioning and/or operation of the beamline.

3.1.4.1 Beamline Operations Oversight

Floor Coordinators provide APS oversight of the beamline operations. Floor Coordinators are familiar with the operation of the beamlines and have the authority to suspend beamline operation if they feel that unsafe conditions may exist. They also provide assistance and/or guidance to the research groups for resolving safety issues that may arise regarding the users and other Argonne services, such as health physics, waste management, etc. A Floor Coordinator is on-site or on-call during all user beam time.

3.1.5 Safety Training

All persons who work at APS, in any capacity, are required to receive safety training with the requirements determined by the nature of the person's work. The content of the training is determined by DOE requirements and Laboratory policies and procedures. Training requirements for all employees and resident users are based on the results of an Argonne Job Hazard Analysis completed by each employee and resident user. Most courses are part of the Argonne Training Management System.

3.1.6 Argonne Safety Responsibility

As a facility within Argonne, the APS is subject to the safety policies and procedures established by Argonne. The Argonne EQO is responsible for the development and implementation of these policies and for monitoring compliance.

In addition to its monitoring and surveillance responsibilities, EQO provides a number of other safety and environmental services such as conducting site-wide training, retraining, and hazard communication, and providing emergency management services. It also maintains key health, safety, and environmental protection documents for operational and historical purposes. EQO supports project and programmatic activities through a number of formalized functions established within the division which include health physics, industrial hygiene, fire protection, and environmental project coordination.

Since its inception, the APS has enlisted the services of a radiation scientist to analyze potential radiological exposures and to recommend control and shielding specifications to protect the users, Argonne personnel, the public, and the surrounding environment.

3.1.7 Fire Protection

3.1.7.1 Introduction

The APS facility complies with the DOE fire protection guidelines established in DOE Order 5480.7A (DOE 1993c) and Argonne guidelines presented in the Factory Mutual Data Sheet 5-4 (Factory Mutual 1986) and the "Description and Status of

Site-Wide Fire Protection Systems and Programs at Argonne National Laboratory" (Futrell 1992). Fire protection systems and features have been considered for the various occupancy levels within the APS buildings, and have been provided at a level commensurate with the nature and extent of the hazards. Key elements of the fire protection provided for the APS facilities include the following:

1. All APS facilities have been provided with a complete automatic sprinkler system. These systems are of either the wet-pipe or the pre-action type and are designed to handle the anticipated occupancy hazard of the finished facility. Design of the system has met worst case parameters, considering one water source or one underground pipe break, to ensure operability of the systems under these conditions.

2. The site has been provided with a multiple-looped underground main system, fed independently from two elevated water storage locations on the Argonne site. The underground piping has sufficient valving to isolate an underground failure and maintain water service to building suppression systems except for a break in an individual sprinkler riser lead-in. The underground piping is also provided with sufficient fire hydrants to allow manual operations by the Argonne Fire Department without excessive hose runs.

3. At least two fire hydrants are provided adjacent to each building. Each hydrant is located within 92 m (300 ft) of the exterior wall of all buildings and no closer than 15.3 m (50 ft) to any building. Hydrants are supplied for the exterior 30 cm (12 in) underground combined domestic and fire mains, with minimum 15 cm (6 in) diameter branch lines to each hydrant. Each hydrant is provided with a gate valve for maintenance purposes. Hydrants and piping comply with the National Fire Protection Association (NFPA) NFPA 24 (NFPA 1992).

4. All APS facilities have been provided with fire alarm and detection systems, consisting of smoke detectors, heat detectors, manual pull stations, and audible and visual annunciation devices as appropriate for the hazard. In addition, high-value areas and radiological control areas have been provided with an air sampling smoke detection system to provide early warning of potential fire emergencies. All fire alarm signals, including supervisory conditions such as valve closures, are monitored by the APS Control Center and the Argonne Fire Department.

5. The APS site is located less than five minutes from the main Argonne fire station. The Argonne Fire Department receives detailed information on the source and type of alarm signal from the APS facility to ensure rapid response and appropriate preparation for any necessary manual fire fighting or salvage operations.

6. Buildings have been constructed primarily of noncombustible materials having appropriate fire resistance ratings where required by reference standards and DOE Orders.

7. All APS facilities have been reviewed by the facility designers for compliance with life safety requirements of NFPA 101 (NFPA 1991).

8. Exterior exposure hazards, such as transformers, have been appropriately addressed by the use of spatial separation and equipment specification.

3.1.7.2 Site-Wide Fire Protection Systems and Support Organizations

Site Water Supply and Distribution System: The site water distribution system is a combined fire and domestic system. Water supply and pressure for the site water distribution system is supplied by a 1.9-million-liter (500,000-gallon) tank located on Water Tower Road near Kearney Road, north of the site. A second 1.1-million-liter (300,000-gallon) tank is located on Bluff Road near Meridian Road, east of the site.

From each of the elevated storage tanks, 30-cm (12-in) feed mains feed the dual 30-cm (12-in) loops around the site. The first 30-cm (12-in) loop encircles the experiment hall and attached structures, while a second 30-cm (12-in) loop is contained in the infield of the experiment hall building. The 30-cm (12-in) loops have cross connections with full isolation valving to assure water supply in all of the buildings in case of shutdown or single-point failure.

For additional information on the site-wide water supply and distribution system, see the report entitled, “Description and Status of Site-Wide Fire Protection Systems and Programs” (Futrell 1992).

Site-Wide Fire Alarm Reporting System: The fire alarm signals generated at the APS facility are transmitted to the Argonne Fire Department fire alarm center via the Argonne site fire alarm reporting system.

Argonne Fire Department: The Argonne Fire Department is available to respond to fire, medical, and other emergencies at the APS. This service facility is centrally located within the Laboratory site, is manned 24 hours a day, and has the ability to respond to any on-site location within three minutes. An initial emergency response consists of a minimum of two pieces of apparatus and six fire fighters/officers. In addition to standard training and certifications, Fire Department personnel receive site-specific training. The Fire Chief or his alternate serves as the incident commander for all on-site emergencies.

3.1.8 Waste Handling, Storage, and Disposal

APS generates waste material. Estimates of these waste volumes are within Argonne excess capacity. The APS is not expected to generate unusual, nonroutine waste products.

Conventional Waste: Conventional solid waste, primarily waste paper and packing material generated by the APS facility, is disposed of similarly to waste from other laboratories and office buildings on the Argonne site. Such waste is disposed of through a commercial waste disposal contract.

Conventional liquid waste, i.e., sewage and effluent from cooling systems, amounts to approximately 114,000 liters (30,000 gal) per day. This waste is treated in the Argonne central sewage treatment plant.

Radioactive Waste: Negligible quantities of solid radioactive waste are produced as a result of normal facility operations. Argonne waste handling procedures are applied.

Small amounts of oxygen-15 (half-life 122 seconds) are produced throughout the cooling water system, which is a closed system. Any releases of oxygen-15 will have a negligible contribution to the ambient concentration due to its short half life (2 min).

Analysis has established that other radioactive materials in the cooling water are produced, but in quantities that are significantly below threshold limits.

Hazardous Waste: Disposal of any hazardous waste will comply with DOE and Argonne hazardous waste handling procedures in accordance with the Argonne Illinois Site Waste Handling Procedures Manual (ANL onlineA).

Mixed Waste: Initially, localized lead shielding around the linac positron conversion (tungsten) target and in certain beam stops was the only potential mixed waste expected to be produced at the APS. With the removal of the positron converter target and its lead shielding, and the subsequent operation of the linac in electron mode only, the potential for production of mixed waste has been greatly reduced. This waste is handled according to the Argonne Illinois Site Waste Handling Procedures Manual (ANL onlineA).

3.1.9 Emergency Management

The APS participates in the Argonne Comprehensive Emergency Management Plan and has developed local area emergency plans for all APS buildings. The emergency management program incorporates documentation, including maps with designated tornado shelters and fire rally points, assignment of area emergency response responsibilities, and periodic drill requirements.

The Emergency Management Organization functions under the management and oversight of the Laboratory Director, Chief Operations Officer, and the various division directors. The Emergency Management Organization, under the direction of the Chief Operations Officer, is responsible for activities as defined in DOE Order DOE O 151.1C (DOE 2005a).

Additional information on the Argonne Emergency Management Organization is contained in the report titled, "Description and Status of Site-Wide Fire Protection Systems and Programs" (Futrell 1992).

3.2 APS Site

3.2.1 Introduction and Site Description

The following section describes the site location and the population surrounding the facility and identifies the agencies contacted to ensure that the APS does not adversely affect the environment. More detail on this subject area is available in the Environmental Assessment, Proposed 7-GeV Advanced Photon Source (DOE 1990b).

Argonne occupies a 516-ha (1275-acre) site of gently rolling land in the Des Plaines River Valley of DuPage County, Illinois, about 35 km (22 miles) southwest of downtown Chicago and 40 km (25 miles) west of Lake Michigan. Laboratory facilities occupy about 81 ha (200 acres) of the total Argonne site area. Surrounding the Argonne site is the 826-ha (2040-acre) Waterfall Glen Forest Preserve, a greenbelt forest preserve of the DuPage County Forest Preserve District. Nearby highways are Interstate 55 to the north and Illinois Highway 83 to the east, see Figure 3.1. About 1.6 km (1 mile) south of Argonne are the Des Plaines River, the Chicago Sanitary and Ship Canal, and the Illinois Waterway (Illinois and Michigan Canal). The principal stream on site is Sawmill Creek, which drains southward to the Des Plaines River. The forest preserve and the area between the river and Argonne are undeveloped, while urban developments predominate in other surrounding areas.

The 28-ha (70-acre) APS site is located in the southwest corner of the Argonne National Laboratory-East facility (Figure 3.2).

3.2.2 Population Distribution

The APS site at Argonne is within the Chicago Standard Metropolitan Statistical Area. This area comprises six Illinois and two Indiana counties around the southwest corner of Lake Michigan.

Figure 3.1 Argonne and Chicago Area

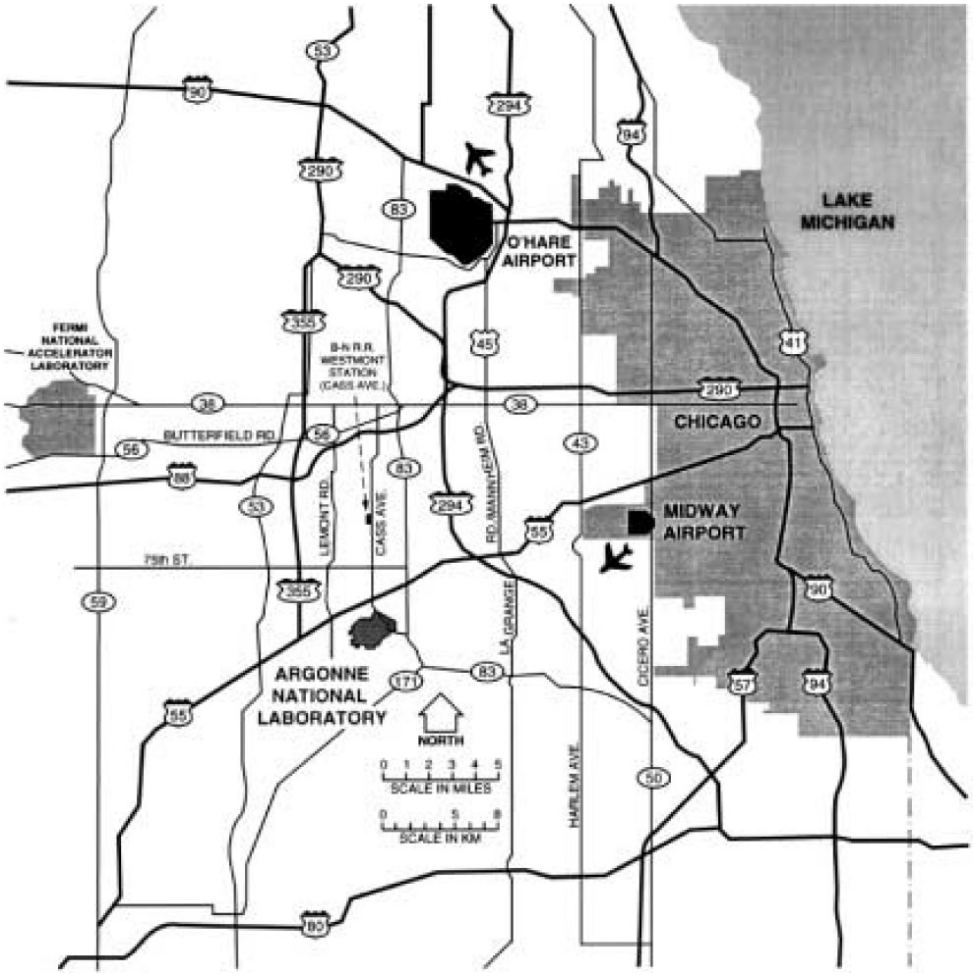

The estimated population by annular sector and radius within 80 km (50 miles) of Argonne at the time the APS construction began is shown in Table 3.1. More than 3.5 million people live within 32 km (20 miles) of Argonne. About 8 million people live within the 80-km (50-mile) radius, which includes portions of Lake and Porter counties in Indiana; portions of Kankakee, Grundy, LaSalle, DeKalb, McHenry, and Lake counties in Illinois; and all of DuPage, Will, Cook, Kendall, and Kane counties in Illinois.

Beyond the forest preserve at the Argonne perimeter, the population density increases rapidly, especially to the northeast. A high-density residential area (with several thousand residents) is 610 m (2000 ft) east of the perimeter.

Figure 3.2 APS Site within Argonne

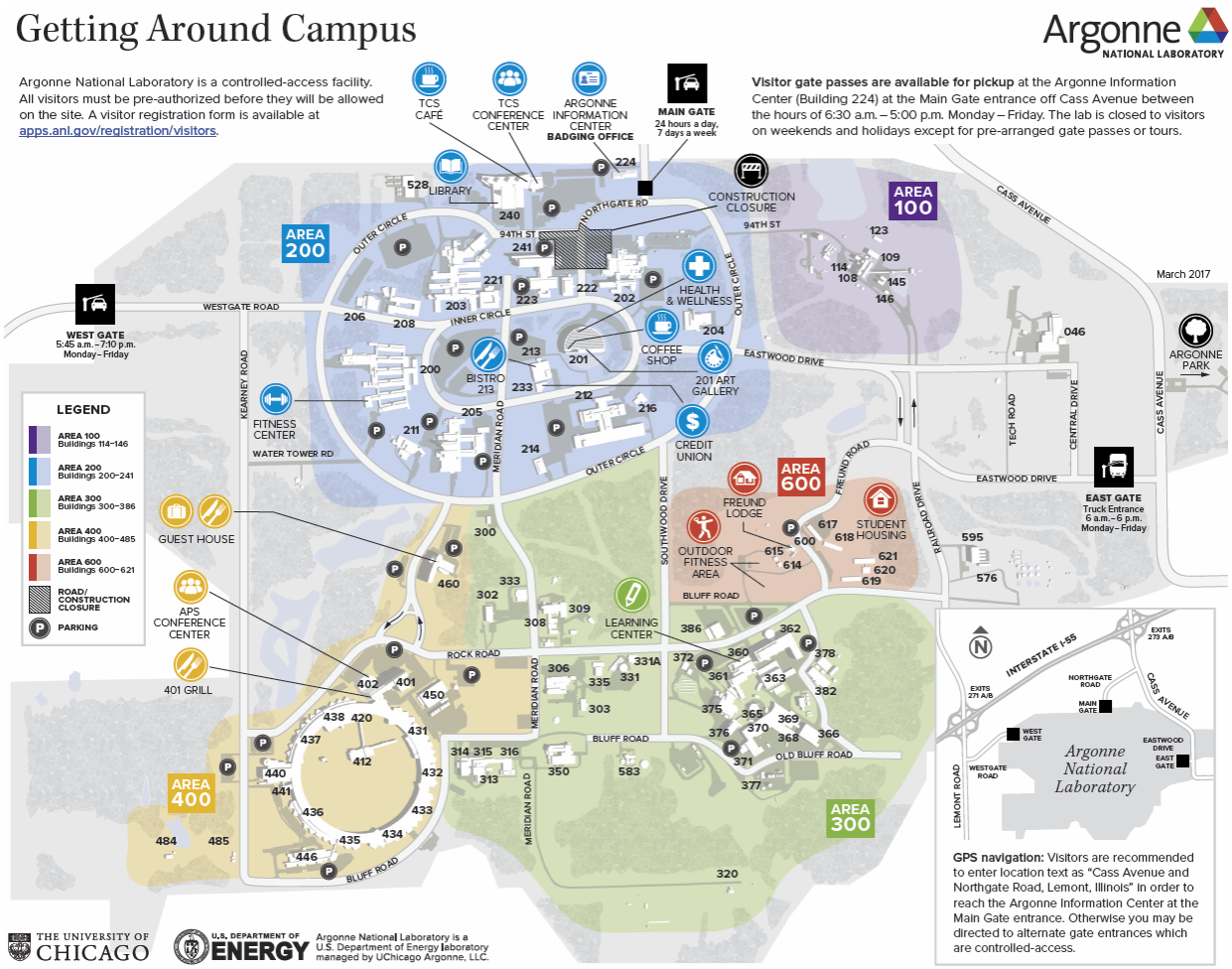

At the time of the initial construction of the APS, the closest residence was SSW of the project site, approximately 1.5 km (0.9 mile) from the project centerline. The closest large, populated subdivision is located northwest of the project site, west of the Argonne West Gate entrance, on the west side of Lemont Road. The center of this development is approximately 2.1 km (1.3 miles) from the project centerline. Lemont (population 6080) to the southwest and Darien (population 16,390) to the north are the urban populations closest to the project site.

Table 3.1 Incremental Population Data

	Population					Population (in thousands)				
Distance, miles	0-1	1-2	2-3	3-4	4-5	5-10	10-20	20-30	30-40	40-50
Distance, km	0-1.6	1.6-3.2	3.2-4.8	4.8-6.4	6.4-8.0	8-16	16-32	32-48	48-64	64-80
Direction										
N	0	661	4199	5602	8783	44.7	172.1	336.7	187.5	221.3
NNE	0	22	3684	5925	5287	38.8	302.3	485.8	86.7	0
NE	0	737	2293	2431	1689	40.9	674.4	866.3	0	0
ENE	0	1117	2495	1460	1482	33.5	598.7	178.9	0	0
E	0	16	10	1	42	40.8	467.0	199.8	13.0	25.8
ESE	0	0	55	331	306	22.4	186.1	282.0	245.0	80.9
SE	0	2	219	425	198	19.8	103.2	114.2	28.6	12.2
SSE	0	72	401	221	1800	12.0	22.1	7.7	11.0	16.8
S	0	105	2298	921	860	3.7	23.4	2.0	35.3	35.0
SSW	0	33	3504	1229	759	14.7	89.8	10.8	17.6	7.1
SW	0	80	20	87	79	11.6	36.7	9.4	16.2	9.1
WSW	0	215	86	620	1646	4.8	7.6	3.7	8.0	7.2
W	0	779	1237	8338	9056	26.2	67.2	19.0	14.8	6.7
WNW	0	254	224	5867	4433	44.3	104.6	20.7	6.6	52.9
NW	0	552	2602	6979	6779	41.6	69.1	95.5	18.2	16.7
NNW	0	492	2774	4521	9390	33.4	188.5	225.2	130.6	96.5
Tota	0	5137	26101	44958	52589	433.2	3112.8	2857.7	819.1	588.4
Cumulative Total	0	5137	31238	76196	128785	561.9	3674.7	6532.4	7351.5	7939.9

Source: Golchert, Duffy and Moos 1992.

3.2.3 Environmental Features

Meteorology: The regional climate around the APS site is characterized as being continental, with relatively cold winters and hot summers, and is slightly modified by Lake Michigan.

The predominant wind direction is from the south, and wind from the southwest quadrant occurs almost 50% of the time (DOE 1982). The average wind speed at Argonne at a height of 5.8 m (19 ft) is 3.4 m/s (7.6 mph), with calm periods occurring 3.1% of the time.

The average annual precipitation at Argonne is 800 mm (31.5 in) and is primarily associated with thunderstorm activity in the spring and summer. The annual average accumulation of snow and sleet at Argonne is 830 mm (32.7 in) (DOE 1982). Snowstorms resulting in accumulations greater than 150 mm (5.9 in) occur only once or twice each year on the average, and severe ice storms occur only once every 4 or 5 years (Denmark 1974).

The area experiences about 40 thunderstorms annually (NOAA 1980). Occasionally these storms are accompanied by hail, damaging winds, and/or tornadoes. From 1957 to 1969 there were 371 tornadoes in the state with more than 65% occurring during the spring months (NOAA 1970). The theoretical probability of a 67-m/s (150-mph) tornado strike at Argonne is 3.0×10^{-5} each year, a recurrence interval of one tornado every 33,000 years (Coats and Murray 1984). The Argonne site has been struck by milder tornadoes, with minor damage to power lines, roofs, and trees.

Hydrology: Four drainages that may have intermittently flowing water are located on the APS site. One originates just west of the site, crosses Kearney Road, and drains north to Freund Brook, which flows near the northwest corner of the site. Freund Brook flows to the east-northeast and enters Sawmill Creek, which flows south to the Des Plaines River. Another drainage in the northeast part of the site also drains northward to Freund Brook. Raw flow data for Freund Brook are not available. However, field observations of the stream size and channel configuration suggest that the discharge averages less than 0.08 m^3/s (3 ft^3/s) and peaks at less than 0.6 m^3/s (21 ft^3/s) during the maximum flood stage.

The remaining drainages originate in the south half of the site and drain southeast to a marsh along the Des Plaines River flood plain. The Argonne site in general has a network of ditches and culverts that transport surface runoff, without treatment, toward the streams.

3.2.4 Geology and Seismology

Stratigraphy: According to Soil and Material Consultants, Inc. (1986), the APS site is underlain by 34-37 m (113-123 ft) of glacial till (Wisconsin stage of the Pleistocene series). Lineback (1979) mapped this unit as the Wadsworth Till Member of the Wedron Formation and described it as a clayey to silty-clayey till with few pebbles and cobbles. Sasman et al. (1981) observed, however, that the base of this unit is locally rich in gravel. Gravel deposits are probably confined to valleys carved in the bedrock surface which now lies buried beneath the Pleistocene sediments (alluvium and glacial till). Lithologic logs of 12 exploratory holes are consistent with Lineback's description. The till is overlain by less than 0.3-0.6 m (l-2 ft) of loess and modern soil.

Strata immediately underlying the till are identified as probably belonging to the Kankakee Formation of the Alexandrian Series lowermost Silurian System. The subcropping weathered zone is up to 10 m (33 ft) thick. This zone shows significant evidence of solution weathering and fracturing, below which rock is generally unfractured and unaltered.

Silurian aquifers (including the Kankakee Formation) are separated from deeper Cambro-Ordovician aquifers by an aquitard, the Maquoketa Group (Ordovician). This group consists primarily of shale units. The top of the Maquoketa Group lies 75

m (246 ft) beneath the surface, and it is about 45 m (148 ft) thick in the vicinity of the APS site according to maps published in Suter et al. (1959).

Detailed geological and geotechnical measurements have been undertaken at the site to identify any variations in the physical properties of the glacial drift that might affect the design, construction, or exact location. In particular, a geotechnical investigation has been accomplished for the purpose of determining general subsurface soil types, ground water conditions, and various soil characteristics. Borings, some of which were to bedrock, have been made at the site. Soil profiles were determined in the field, and soil samples were tested in the laboratory to determine moisture content, dry unit weight, and unconfined compressive strength.

Test results have shown that the surface soils are glacial tills composed predominantly of clay-silt mixtures with lesser portions of sand and gravel. At the deeper elevations, rock debris is frequently present. The underlying bedrock consists of a thin- to medium- grained grayish-white dolomite. The site soils are preconsolidated and are usually high in density and strength. The site is stable and well suited to meet the low vibration and low settlement requirements for the construction of the APS facility.

Soils: According to the USDA (ANL 1979, USDA 1979), the site consists mainly of upland soils belonging to the Morley Series. These soils formed in silty clay loam glacial till. Locally, a thin layer of overlying silty material is present. In the site area, surfaces on these soils generally range from nearly flat to about 15% slope. These upland soils are deep, well drained, and moderately slow to slowly permeable. Small marshlands, ponds, and moderate erosional features are on the vicinity of the construction site.

Other soil series in and adjacent to the construction site are the Sawmill silty clay loam (along a tributary to Sawmill Creek) and isolated areas of Blount silt loam, Ashkum silty clay loam, and Peotone silty clay loam. These soils differ from the Morley Series in that they are all poorly or very poorly drained and are in localized low-lying areas within the upland till plain.

Seismicity: No tectonic features within 100 km (62 miles) of Argonne are known to be seismically active. The longest of these features is the Sandwich Fault. Smaller local features are the Des Plaines disturbance, a few faults in the Chicago area, and a fault of apparently Cambrian age (DOE 1982).

Although a few minor earthquakes have occurred in northern Illinois, none has been positively associated with a particular tectonic feature. Most of the recent local seismic activity is believed to be caused by isostatic adjustments of the earth's crust in response to glacial loading and unloading, rather than by motion along crustal plate boundaries.

There are several areas of considerable seismic activity at moderate distances (hundreds of kilometers) from Argonne (Hadley and Devine 1974). These areas include the New Madrid Fault zone (southeastern Missouri), the St. Louis area, the Wabash Valley Fault zone along the southern Illinois-Indiana border, and the Anna region of western Ohio. Although high-intensity earthquakes have occurred along the New Madrid Fault zone, their relationship to plate motions remains speculative at this time.

According to estimates by Algermissen et al. (1982), ground motions induced by near and distant seismic sources in northern Illinois are expected to be minimal. However, peak accelerations in the Argonne area may exceed 10% of gravity (approximate threshold of major damage) once in about 600 years, with an error range of -250 to +450 years.

3.2.5 Cultural Resource Compliance

A programmatic agreement was reached with the Illinois State Historical Preservation Officer (ISHPO) to identify, evaluate, and report the findings of cultural interest in the construction area. Field reconnaissance and data collection for the entire site is complete. Six of the archeological sites impacted by construction have been fully analyzed and reported to the Illinois Historic Preservation Agency (IHPA) and the Advisory Council on Historic Preservation (ACHP). At this time, the APS Project is in full compliance with the conditions of the programmatic agreement.

Eleven archaeological sites and tens of thousands of artifacts were analyzed. Six of those sites were directly impacted by the construction of the APS facility. Two of the remaining five sites (ANL-29, ANL-32) are protected from construction activities, one site (ANL- 33) was avoided by construction activities, and the fourth site (ANL-38) still awaits final clearance from IHPA. The fifth site (ANL-6/Feature 270) has been cleared by the IHPA and the ACHP, and is no longer eligible for the National Register of Historic Places. The Argonne Cultural Resource Management Program administered by Midwest Archeological Resource Services, Inc. will continue to monitor the protection of sites ANL-29, ANL- 32, and ANL-33, as well as perform Phase II evaluations at site ANL-38 when required.

In accordance with the programmatic agreement, the artifactual materials and records resulting from data recovery at the APS sites are being curated at the Illinois State Museum’s Research and Collections Center in Springfield, Illinois. This material is contained in 58 boxes at the museum facility; a large volume of noncultural and redundant pieces were removed to consolidate the collection per guidance from the IHPA.

3.2.6 Environmental Compliance

The following federal environmental statutes and executive orders have been addressed to ensure compliance and to meet DOE guidelines for compliance with the

National Environmental Policy Act (NEPA) in accordance with DOE Order 5440.1C (DOE 1985). An environmental assessment (DOE 1990b) was submitted to DOE in October 1989. A finding of No Significant Impact notice was published in the Federal Register, Vol. 55, No. 95 (5/16/90). In 2003 a review and update of the APS environmental assessment was completed, with a finding of no significant impact issued in June 2003.

Clean Air Act: The only potential impact to air quality is from fugitive dust emitted during construction activities. Discussions with the Illinois EPA indicate that fugitive dust from this site, if managed prudently, is not a problem violating total suspended particulate air quality standards. An Illinois EPA permit (standard process emissions) application for construction was approved on November 2, 1989 for the construction of the APS. Additionally, a Federal National Emission Standards for Hazardous Air Pollutants (NESHAP) permit application was submitted, addressing anticipated radiological air emissions upon operation of the facility. A NESHAP permit was issued to proceed with construction. A NESHAP operating permit was issued by the Illinois Environmental Protection Agency on July 27, 1993.

Clean Water Act: Only normal facility discharges are anticipated such as storm-water runoff, cooling tower blowdown, and sanitary wastes. Cooling tower blowdown is discharged into the existing Argonne sanitary sewer system and treated at the laboratory's wastewater treatment facility, which has a National Pollutant Discharge Elimination (NPDES) permit. Argonne's current NPDES permit has been modified to include the increased load on the laboratory system since current operating capacity plus APS project usage will not exceed total approved discharge volumes. Constituents consist of phosphate-based inhibitors, microbiocides, and chlorine compounds. All additives are biodegradable and can be treated at the existing water treatment facility. Domestic water is monitored quarterly and reported in the annual site environmental surveillance report (Golchert 2003).

Coastal Zone Management Act: The project is not located in a designated coastal zone.

Fish and Wildlife Coordination Act: Consultation was undertaken with the U.S. Fish and Wildlife Service (FWS) pursuant to the Fish and Wildlife Coordination Act. The FWS recommended that any small wetland losses should be mitigated (see section 3.2.7).

Endangered Species Act: Consultation with the Endangered Species Office of the FWS office in Rock Island, Illinois has indicated that there are no threatened and endangered species in the APS site area. In addition, the steward for the Waterfall Glen Forest Preserve (DuPage County, Illinois) was also contacted for information on the presence of protected species in adjacent areas. Information on the presence of protected species (both federal and state) was included in section 2.2.3.3 of the Environmental Assessment for Argonne National Laboratory published in August

1982 (DOE 1982). This remains the most up-to-date, published information on the Argonne site and immediate vicinity. The FWS has determined that no action by APS is necessary to protect endangered species (Nelson 1988).

Resource Conservation and Recovery Act (RCRA)/Hazardous Wastes: Any hazardous wastes generated by the APS project are handled in accordance with established Argonne procedures. The laboratory has interim status (Part A) under the IEPA-RCRA regulations and has applied for a RCRA Part B permit. The Argonne Waste Handling Procedures Manual is adhered to. The quantity of hazardous wastes, if any, is expected to be small and readily managed within the existing hazardous waste management program. Hazardous wastes are placed into appropriate receptacles, labeled, and documented for pickup by Argonne Waste Management Operations personnel. Handling, treatment, storage, and disposal of the hazardous wastes by the Waste Management Operations Department is in accordance with RCRA regulations.

Safe Drinking Water Act (SDWA): All APS facility drinking water is obtained from existing laboratory systems. There are no existing or proposed drinking water wells within the APS site.

Corps of Engineers Permits: Construction impacts to several small wetlands (0.73 ha [1.8 acres] total) were unavoidable. These wetlands provided some wildlife habitat, but were of relatively low hydrological importance. The U.S. Army Corps of Engineers (COE) has issued a permit for construction in the wetlands in accord with Section 404 of the Clean Water Act. As part of this permit, DOE consulted with the COE on implementation of a plan to mitigate wetland loss of 0.73 ha (1.8 acres) (see section 3.2.7).

Flood Plains/Wetland Executive Order: A Flood Plain and Wetland Involvement Notice was published in the Federal Register (54 FR 18326) on April 28, 1989. By terms of the COE permit, engineering specifications for the replacement wetlands were reviewed with the COE before implementation. With mitigation in place, no significant impacts to the flood plains or wetlands were identified.

3.2.7 Wetland Mitigation Monitoring

Construction of a replacement wetland (Figure 3.3, Wetland “R”) was completed during the initial phase of facility construction and protected from subsequent construction activity by fencing and erosion control measures. Another wetland (Figure 3.3, Wetland “C”) was avoided by the construction and subsequently mitigated through an Argonne wetland bank.

Figure 3.3 APS Cultural Resources

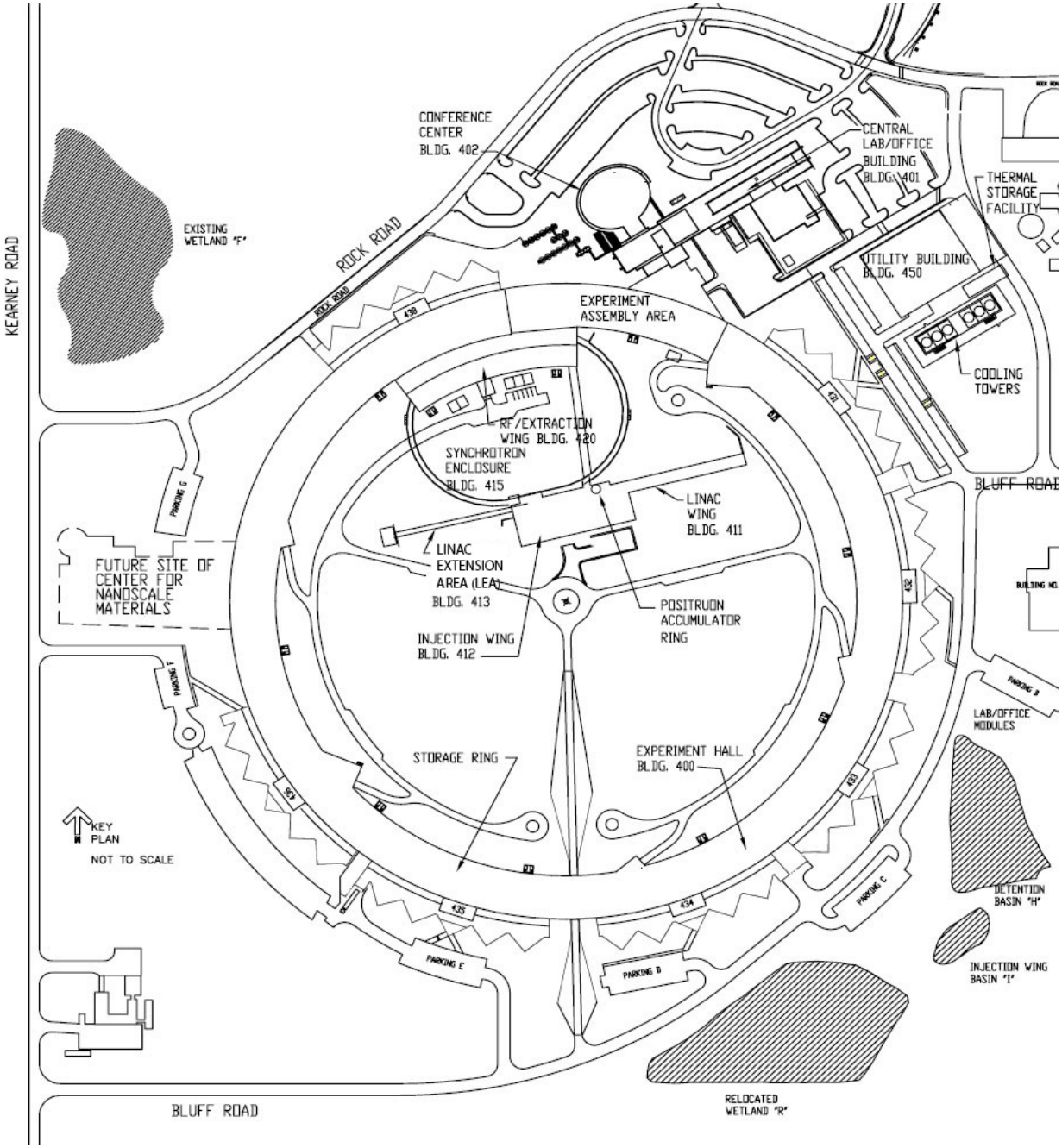

3.3 APS Linac System Technical Facilities Description

3.3.1 General Overview

The APS linac system includes 1) technical components consisting of equipment necessary to accelerate electrons to an energy of 700 MeV, and 2) conventional facilities, consisting of the buildins which house the technical components and the utilities required for the operation of the equipment. The linac system is located within the infield of the experiment hall building. Personnel access to the linac system is provided through the experiment hall building, and vehicular access is provided through the vehicular tunnel which routes traffic unter the floor of the experiment hall building.

The process of creating, accelerating, and transporting a particle beam inherently creates a situation where hazards will exist. A hazard's consequences, but not necessarily the risks, increase with increasing beam power (intensity times energy). The primary hazards associated with accelerators are electrical hazards and ionizing radiation, although other hazards including nonionizing radiation, magnetic fields, toxic gases and materials, fire, industrial accident, etc., frequently can and do exist. Barriers and physical and administrative controls are put into place to ensure that the hazard risk and the consequences of the hazard are reduced or eliminated.

All of the components containing accelerated particle beams are located within shielded enclosures, usually consisting of standard concrete, but including other materials, such as high-density concrete, lead, steel, plastic and earth, as appropriate. The shielding and personnel access controls are adequate to maintain radiation exposure levels outside the shielding well within the present exposure guidelines (DOE 2009). The APS Access Control Interlock System (ACIS) provides protection by ensuring that no one may be in, or able to enter, an area where prompt radiation may be present. The system is designed to turn off the source of radiation and will allow the linac/PAR combination and synchrotron to operate independently of one another under specific, predefined conditions by partitioning the areas with beam stops and other safeguards. The ACIS is described in detail in section 3.11.1.

The associated buildings of the APS, with their numeric designations, are the inac building (411), the synchrotron injection building (412), the Linac Extension Area (LEA) building (413), the booster/injector synchrotron (415), the rf/extraction building (420), the storage ring, Experiment Assembly Area, and the experiment hall (400). The utility building (450) is not located in the infield, but is mentioned in this document since it is the source of all of the utilities for both the technical and conventional facilities of the APS.

The linac system is housed in the linac building (411). The building contains the concrete-shielding enclosure for the beam-carrying components and an adjoining klystron gallery. The klystron gallery contains linac components which do not have to be located within the shielding, but which may require observation or access

during linac operation. The concrete tunnel housing the linac is 75 m long with inner dimensions of 2.7 m × 2.7 m. The beam height is 1.4 m above floor level. The roof and wall opposite the klystron gallery are 30-cm-thick concrete covered with enough earth berm to be the shielding equivalent of 2 m of concrete. The wall adjoining the klystron gallery is 2 m of concrete. Two access mazes with interlocked doors are provided from the klystron gallery into the linac enclosure. One access door is at the electron gun, the other is located downstream of the linac. The low-energy (east) end of the shielding enclosure and a section of wall next to the electron-gun access door are constructed from 1 m of removable concrete blocks to provide larger openings, when required, than the standard access doors. Penetrations through the shield wall for equipment interconnections, cables, conduit, etc., into the klystron gallery are made at the top of the shield wall to ensure that no direct line-of-sight path exists to the beam centerline.

Additional building-specific information is provided in section 3.10. The following text describes the technical components of the linac system.

3.3.2 Electron Gun Systems

There can be a number of different electron gun systems in use at the APS. The availability of multiple gun systems allows interleaved operation of the linac for both filling the storage ring, providing a high-brightness electron beam to the LEA, and to help insure high availability of the APS injector system. The electron gun systems used are two thermionic rf electron guns and the photocathode rf electron gun.

3.3.2.1 Thermionic rf Electron Gun Systems

Each of the thermionic rf electron gun systems produces a 1.5-A, < 50-ns-long electron bunch train at a repetition rate of up to 10 Hz. Each consists of a thermionic cathode mounted in the first cell of a 1-1/2 cell, side-coupled, standing-wave rf structure operated at the 2856 MHz of the APS linac. With 8 MW of power (1.7 ms pulse width at 10 Hz) directed into the rf guns, they will accelerate the 1.5-A average current up to 3 MeV. The electron beam emitted from these guns is transported by a series of quadrupoles and compressed longitudinally during its traversal of an alpha magnet to peak microbunch currents of 150 A. Finally the beam from one of these guns is guided into the accelerating structure of the APS linac. Figure 3.4 shows the thermionic rf electron gun systems installed in the linac.

A tungsten dispenser cathode is used in these rf guns. It has a flat, circular surface of 6 mm diameter and is capable of producing current densities up to 140 A/cm^2 when heated. The nominal cathode surface temperature for emission is close to 950° C. This requires a cathode filament power of approximately 16 watts supplied by a 5-A, 16-V DC constant voltage power supply.

Figure 3.4 Upstream Linac Plan View with Both rf Guns and PC Gun in Place

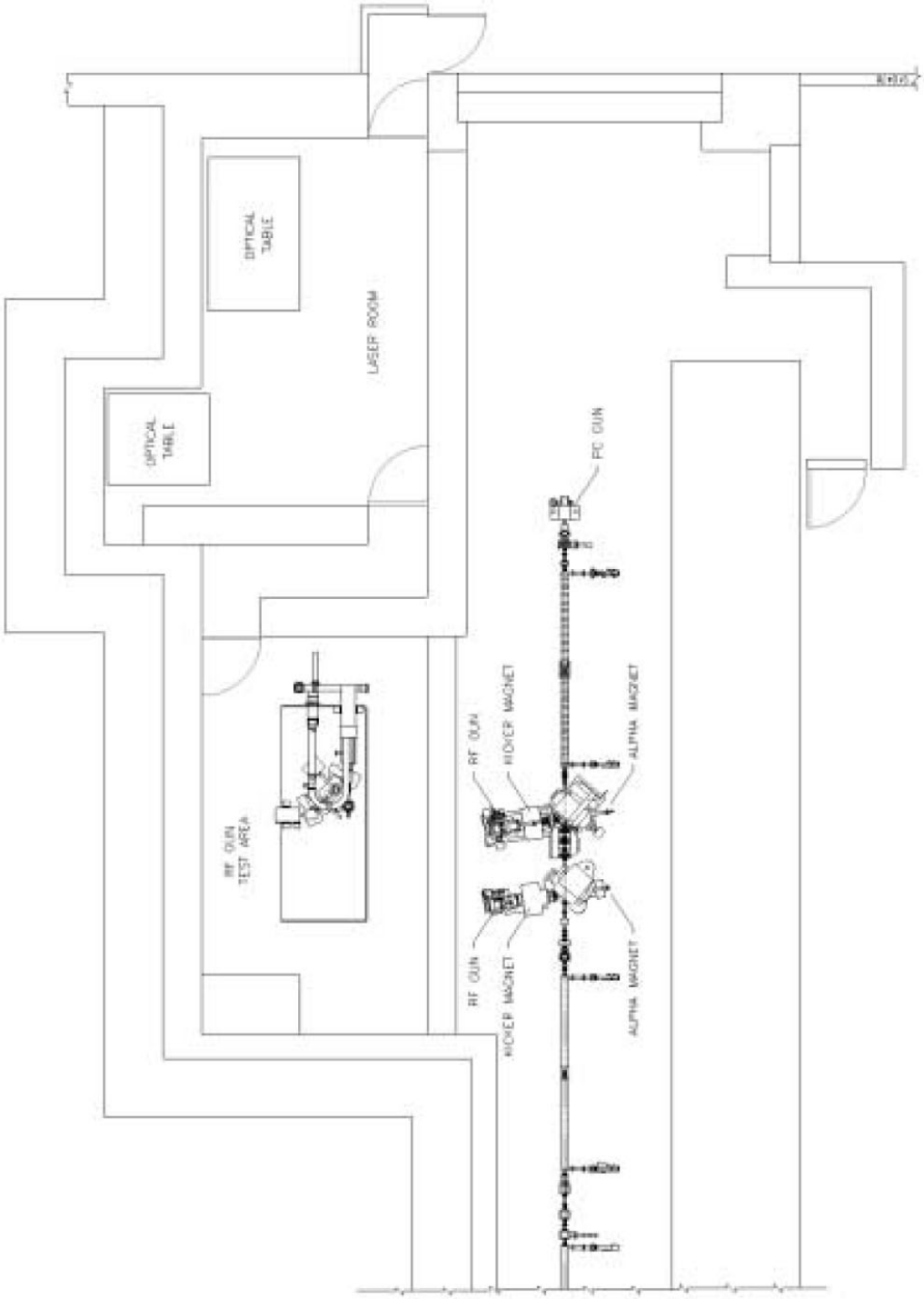

During steady state operation the rf guns emit a packet of electrons every 350 ps for the duration of the rf pulse. To limit the total charge delivered and further accelerated by the APS linac, a fast kicker system is incorporated into each of the beam transport lines. They are used to pass a small portion of the available beam. This kicker consists of crossed DC magnetic and pulsed electric fields. The magnetic dipole field is generated by a permanent magnet and has a peak field of < 0.01 T. The electric field is generated by two plates each attached to its own pulse-forming network (PFN) and charged to the same potential. The PFNs are then discharged through a single fast switch. Due to length differences of the PFNs connected to the plates, there is a momentary imbalance in the electric field; this provides the necessary force to overcome the magnetic force and so allow the beam to continue. This beam gate is open for less than 50 ns and is limited by the fixed length of these PFN cables. The PFNs can be charged up to 30 kV DC, and the stored energy is 1 J. The high-voltage power supply used to charge the PFNs is rated to 500 W at 30 kV DC. The stored energy at the output of the supply is less than 1.5 J.

Trace amounts of barium and cesium in the tungsten dispenser cathode make it a good photocathode, and so it can be triggered to release electrons by striking the surface with photons of sufficient energy. A pulsed laser system can be used to gate the cathode on and off. This promises even better rf gun performance than operation in thermionic mode. We will attempt operation of the thermionic rf gun in this photocathode mode. This is very similar to the mode of operation described below for the photocathode rf gun operation.

Details of the other components considered part of each of the thermionic rf electron gun systems are listed below.

- Seven quadrupole magnets: Each has a bore radius of 20 mm and produce a maximum gradient of under 5 T/m, giving a maximum pole-tip field of under 1.0 T. The magnets are individually energized by bipolar 5-A, 20-V DC power supplies.

- Five steering magnets: These are of a window-frame design and produce fields of under 0.01 T. Each provides steering in either the vertical or the horizontal plane. The magnets are individually energized by bipolar 2-A, 4-V DC power supplies.

- One alpha magnet and trim: This magnet is used to longitudinally compress the beam and to redirect it on to the centerline of the linac. It produces a vertical quadrupolar field of under 4.0 T/m and a bending angle of 278.6° in the horizontal plane. It is powered by a 330-A, 30-V DC power supply. A trim winding is provided for fine adjustment and degaussing. This winding is powered by a 5-A, 20-V DC bipolar DC power supply.

- Three ion pumps: These maintain high vacuum in the rf gun and beamline. Voltages up to 6 kV are used.

- One gate valve: This is used to isolate the rf gun from the linac. It is activated by a pneumatic actuator that can be remotely controlled. This actuator uses 90-psi compressed air.

- One vacuum ion gauge: The gauge monitors the pressure in the rf gun beamline. Voltages up to 75 V are used.

- Two beam toroids: These are used to quantify the charge emitted from the gun as well as the amount of charge passing through the alpha magnet and on into the linac.

- One combination Faraday cup/fluorescent screen: This is positioned in-line with the rf gun and is used to both quantify the charge emitted from the gun and to monitor beam shape and position when it exits the gun. A video signal camera is used for imaging.

3.3.2.2 Photocathode rf Gun System

The photocathode rf gun consists of a metallic photocathode plate (copper or magnesium) mounted in the first cell of a 1.6-cell, p-mode, standing-wave rf structure operated at the 2856 MHz of the APS linac. Electrons are emitted when the cathode is struck by photons of sufficient energy. These are generated by a high-power pulsed laser system. The electron beam emitted from the rf gun is then focused by a solenoid magnet, further transported along the beamline, and finally guided into the accelerating structure of the linac. Figure 3.4 shows the photocathode rf electron gun system as arranged in the linac tunnel.

This rf gun can provide a single pulse with 300-A peak current for each incident laser pulse, at 5 MeV with 10 MW of rf power (1.7 µs pulse width at 10 Hz) into the gun. This corresponds to a delivered charge of less than a few nC each linac cycle.

Within the linac tunnel and alongside the photocathode rf gun system is a small optical table that holds the final optics for transporting, controlling, and monitoring the laser beam. During normal operation the optical path for this transport system is fully enclosed with light pipes or shields to prevent personnel from exposure to the laser beam.

Details of the other components considered part of the photocathode rf electron gun system are listed below.

- One solenoid magnet: This magnet can produce an on-axis central longitudinal field of 0.28 T. It is water cooled and is energized by a single 250-A, 30-V DC power supply.

- One steering magnet: This is of a window-frame design, and produces a field of under 0.01 T. It provides steering in either the vertical or the horizontal plane. The magnet is energized by a bipolar 2-A, 4-V DC power supply.

- Two ion pumps: These maintain high vacuum in the rf gun and beamline. Voltages up to 6 kV are used.
- Two gate valves: These valves are used to isolate the rf gun from the beamline and linac accelerating structure. They are activated by pneumatic actuators that can be remotely controlled. These actuators use 90-psi compressed air.
- One fluorescent screen: This is used to monitor beam shape and position when it exits the gun. The insertion actuator for this screen uses 90-psi compressed air. A radiation-hardened camera is used for imaging.
- An in-vacuum mirror for directing the laser beam from an off-axis viewport onto the photocathode.

3.3.2.3 Laser System

A high peak power light pulse in the UV part of the spectrum, ≤ a few picoseconds long, must be generated by the laser system used for the photocathode rf electron gun system. A laser oscillator operating in the infrared (IR) portion of the spectrum emits a pulse train. A single pulse is selected from the emitted IR pulse train and is sent to the laser amplifiers. There the single, low-power pulse is amplified, attaining peak powers in the gigawatt range and energies of less than 30 mJ. This infrared pulse is successively passed through two harmonic generation crystals. These crystals convert part of the IR pulse up into the UV portion of the spectrum. This UV pulse is then sent into an optical transport system to the photocathode rf gun. To insure this pulse arrives at the photocathode at precisely the correct phase of the rf, the laser oscillator is locked to a subharmonic of the 2856-MHz linac rf frequency.

There are various hazards associated with the laser system. The two most significant hazards are the high-power optical pulse, which ranges from the infrared to the ultraviolet portion of the spectrum, and the high-voltage power supplies (10 kV) used for Pockels cells and laser amplifier heads. The risk of exposure to the laser is reduced by enclosing the optical path as much as practicable. Procedures are used for operating and working on the high-voltage systems.

Other equipment used for the proper operation of the laser system and final optics table include standard optics such as lenses and mirrors (some of which may be driven remotely by low-voltage, low-current, stepper motors or piezoelectric drives) and optical diagnostics such as CCD cameras, photodiodes, position-sensitive detectors and optical spectrometers (all of which require small, low-voltage, low-current power supplies).

The laser system is housed in a separate, shielded laser room adjacent to the electron guns (Figure 3.4). This room is a laser-controlled area and is designed and equipped accordingly as stated in section 4.3.2.2.1.

3.3.3 Linac rf Accelerating System

The rf power system which generates and transmits rf power to the beam is replicated several times. Therefore the common aspects of the system are described here, and only particular details unique to each area are described in the other sections.

Acceleration of the electrons in the linac is accomplished by a series of 86-cell, constant gradient, travelling wave accelerating structures operating at a frequency of 2856 MHz. Each structure is approximately 3 m in length and made of oxygen-free high-conductivity (OFHC) copper. The rf power is supplied to the accelerating structures through transmission waveguides made of OFHC copper and operating under vacuum conditions. Included as part of the transmission waveguides are sections having special functions, such as hybrid splitters, couplers, transitions, etc., as required to transfer the proper amount of rf energy at the correct phase to the accelerating structure. Vacuum ion pumps are located throughout the waveguide system to provide the required vacuum level in the waveguides. The pumps require 6-kV high-voltage input power, and for safety reasons, these high voltage conductors are encased in conduits.

The rf energy source is either a 35-MW or a 45-MW pulsed klystron located in the klystron gallery. The klystron, together with its magnet and pulse transformer, is installed in a steel tank filled with nonflammable dielectric cooling oil. X-ray shielding is incorporated into this assembly to reduce the x-rays produced by the klystron to acceptable levels. The rf energy from the klystron is either a) transmitted to a single accelerating structure, or b) transmitted to a Stanford Linear Accelerator Center (SLAC) energy doubler (SLED) cavity and then the power is split between four accelerating structures. A SLED cavity compresses the rf power pulse in time, thereby increasing the rf peak power by a proportional amount The SLED cavities can potentially generate x-rays; therefore, lead shielding has been incorporated into the support enclosure.

The pulsed DC power required to operate the klystron is provided by a high-power (100-MW peak) pulsed modulator. Each klystron requires its own modulator power supply. The modulator power supply and its associated low level electronics are located in the cabinet and racks next to the klystron tank in the klystron gallery. All of the high-voltage cabinet access doors are locked and interlocked to provide high-voltage protection.

Automatic shorting relays are incorporated and ground sticks are provided to allow the operator to physically ensure that the high voltage is grounded before any work is begun. The ground stick return interlock is only satisfied when the ground stick is returned to its designated location.

Each klystron requires a 400-W power amplifier to provide rf drive at sufficient level to drive the klystron. The amplifier is interlocked to the main personnel safety

system, and the rf drive signal to the klystron is disabled on a fault condition. In addition, the amplifier is interlocked to the equipment protection system, with the klystron rf drive being disabled on a fault condition (e.g., waveguide arc).

The rf gun water stations act as secondary pumping systems, with the primary system being DI water that originates from the utility building 450. This filtered DI water, used throughout the APS, is controlled at approximately 75 degrees F and therefore can be used to control temperatures of heated secondary water systems. The new rf gun water systems developed in 2011 achieve this by mixing water of two different temperatures.

Both rf gun and injector test stand water stations essentially consist of a pump, mixing valve and electric heater. The gun water system mixes the 75 degree F primary water with heated re-circulating water through a mixing valve to control temperature ± 0.05 ° F of setpoint to achieve gun tune frequency of 2856 MHz.

Situated by each klystron tank is a water pumping and heating station. The station provides a flow of thermally stabilized (45° ± 0.05° C [113.0° ± 0.1° F]) deionized water to the accelerating structures, SLED cavities, and vacuum transmission waveguides. The station is capable of providing 302.8 l/min (80 gpm) at 552 kPa (80 psi). The station contains filters and water quality polishing canisters to maintain the low water conductivity.

The generation and transmission of the substantial amount of rf energy creates a nonionizing radiation hazard. However, all of the rf energy is contained within the rf components, and the risk of exposure to personnel is small. The analysis of the exposure potential is presented in section 4.3.

3.3.4 Linac RF Waveguide Switching System

The linac is equipped with an rf waveguide switching system to allow klystrons to assume backup roles in the case of failure. In the current switch configuration, the L3 klystron is used as a hot spare for L1 and L2, to power operation of the Injector Test Stand for RF gun off line testing, and is configured to be available to power a photocathode rf gun to support LEA operation when the Storage Ring is not running in a top-up mode. The WR-340 waveguide switches operate at a maximum peak power of 38 MW, which is the greatest practical power output that can be provided by the combination of the existing modulators driving the 45 MW peak rated klystrons. The waveguide switches are pressurized with sulfur hexafluoride (SF6) to 30 psig.

Additional switching configurations are planned and will undergo appropriate review before becoming operational.

3.3.5 Upstream Electron Linac

The upstream electron linac has five accelerating structures to accelerate the electrons from approximately 2.5 MeV to energies up to 250 MeV. The upstream electron linac uses two klystrons, one feeding the first accelerating structure, the second feeding the next four through a SLED structure. A plan view of the upstream electron linac is shown in Figure 3.4.

The linac has a number of vacuum components, including vacuum ion pumps, flanges, bellows, etc. The base operating pressure of the electron linac is 13 mPa (10^{-7} Torr). Vacuum ion pumps require 6-kV high voltage input power from power supplies located in the klystron gallery, and for safety reasons, these high voltage conductors are encased in conduits. Vacuum gate valves isolate sections of the electron linac. They are interlocked to close if the vacuum on either side of the valve degrades below a preset limit. Vacuum valves are interlocked to the gun pulser to disable the electron gun whenever a valve is closed. The valves are opened and closed using compressed nitrogen, controlled by solenoids powered by 24 VDC. The solenoids are energized to open the gate valves. A loss of power results in closing of the gate valves.

A dipole spectrometer magnet is located at the end of the upstream electron linac and is energized to permit beam energy measurements. During normal operation, this magnet is off. The bend angle of the electrons through this magnet is a function of the beam momentum and the magnetic field strength. The magnet is powered by a 10-kW power supply at 16 VDC and a current of less than 600 A. Temperature sensors on the magnet coil are interlocked to the power supply. An aluminum beam stop enclosed in a lead and plastic housing absorbs the electron beam during energy measurements when the dipole magnet is energized. The beam stop was designed for power levels up to 600 W, and is composed of 25 cm of aluminum, backed by 15 cm of lead. The beam stop is not water cooled, but is equipped with a thermal interlock to prevent energizing the electron guns in the unlikely event that the aluminum temperature exceeds 100° C. The beam stop is read out as a Faraday cup, allowing for cross calibration with the other beam diagnostic instruments, and optimization of beam parameters.

3.3.6 Bunch Compressor

The linac bunch compressor, the components of which are shown in Figure 3.5, is located between the upstream and downstream electron linacs and is used to increase the peak current of an electron bunch. To increase the peak current, an incoming bunch is prepared with a defined positive energy chirp, or small energy spread, with the leading portion of the electron bunch having a lower energy than the trailing portion. The head of the bunch takes a longer path through the compressor magnets than the tail. The tail therefore catches up to the head, the bunch length is decreased, and the peak current is increased.

The APS bunch compressor consists of four dipole magnets and two “tweaker” quadrupoles. The central two dipoles can be translated perpendicular to the axis of the linac, in the horizontal plane, to vary the dispersion from 0 mm to 65 mm. The possible displacements range is from -185 cm (to the right, when looking downstream) to +9 mm. The last dipole can be translated longitudinally along the linac axis to vary the symmetry of the chicane from completely symmetric to a 2:1 symmetry. (That is, the final two dipoles are spaced, longitudinally, twice as far apart as the first two dipoles.) The maximum displacement is 620 mm, and minimum displacement is 48 mm. The tweaker quads are used when the chicane is in an asymmetric configuration, to allow for proper dispersion correction.

There are several diagnostics associated with the bunch compressor. These include five dual-resolution cameras that allow low-resolution imaging of high-emittance (large) beams and high-resolution imaging of low-emittance (small) beams, energy scrapers, and various beam position monitors (BPMs). One dual-resolution camera, one BPM, and the energy scrapers are located between the second and third dipoles of the chicane. One dual-resolution camera is located at the exit of the last chicane dipole. The remaining three dual-resolution cameras are arranged after the chicane but before the entrance to the downstream linac’s first accelerating section to permit emittance measurement, transverse wakefield correction, and Twiss parameter matching. A spectrometer dipole is located after the chicane. The spectrometer branch line contains one dual-resolution camera and one standard linac camera; these cameras are used for beam energy, energy spread, and longitudinal wakefield tuneup to the bunch compressor.

Figure 3.5 Linac Bunch Compressor

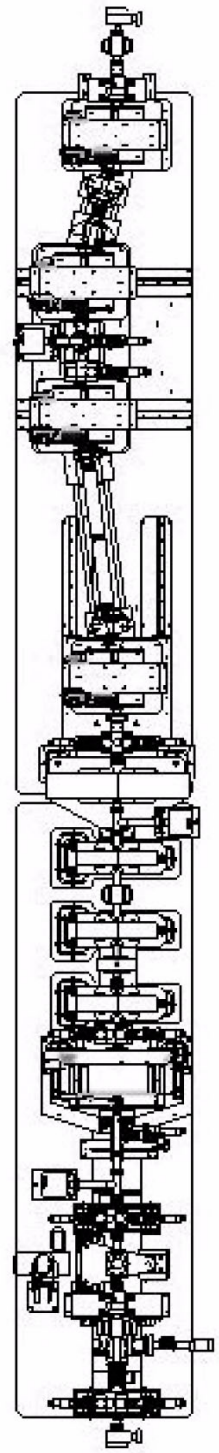

The bunch compressor employs three types of magnets: correctors, dipoles, and quadrupoles. The power supplies are sized to accommodate the specific requirements. The first magnets the beam encounters are correctors L2:SC4:VL and L2:SC4:HZ. Each is powered by a 20-V, 5-A bipolar DC supply. Next are two bending magnets, L3:BM1 and L3:BM2. These are wired in series to have the same current in both magnets and are powered by a 60-V, 80-A unipolar DC supply. The trim winding of these magnets, L3:BM2T, is powered by a 20-V, 5-A bipolar DC supply. Next are two quadrupoles, L3:QM1 and L3:QM2, that are each powered by a 10-V, 4-A bipolar DC supply. Next are the final two bending magnets, L3:BM3 and L3:BM4. These are also wired in series to have the same current in both magnets and are powered by a 60-V, 80-A unipolar DC supply. The trim winding of these magnets, L3:BM4T, is powered by a 20-V, 5A- bipolar DC supply. Next in the beam path are four more quadrupoles—L3:QM3, L3:QM4, L3:QM5, and L3:QM6—each of which is powered by a 40-V, 250-A unipolar DC supply. Next is a dipole, L3:AM1, that is used as a spectrometer magnet. It is powered by a 30-V, 65-A unipolar DC supply. The trim coil of this magnet, L3:AM1T, is powered by a 20-V, 5-A bipolar DC supply. Finally, there is a pair of corrector magnets, L3:SC2:VL and L3:SC2:HZ, each of which is powered by a 20-V, 5-A bipolar DC supply.

3.3.7 Downstream Electron Linac

The electron linac downstream of the bunch compressor is responsbile for accelerating electrons for today's operating energy of 325 MeV. The two sectors, known as linac four (L4) and linac five (L5), each consist of a dedicated klystron and SLED cavity capable of producing rf power to accelerate electrons to the designed energy of 700 MeV. The plan view of the downstream electron linac is shown in Figure 3.6.

Eleven large-bore quadrupole magnets surround the accelerating structures downstream of the bunch compressor. They produce a maximum gradient of 4 T/m. The power supplies for each quadrupole are located in the klystron gallery, and are 10-kW supplies operating at 32 VDC, with a current of less than 310 A. Small steering coils are located after most accelerating structures. These are powered by 20-V, 5-A bipolar power supplies.

Beam diagnostic and vacuum equipment are identical to the equipment already described under the upstream electron linac description in section 3.3.5 and their descriptions will not be repeated here.

Figure 3.6 Downstream Linac Plan View

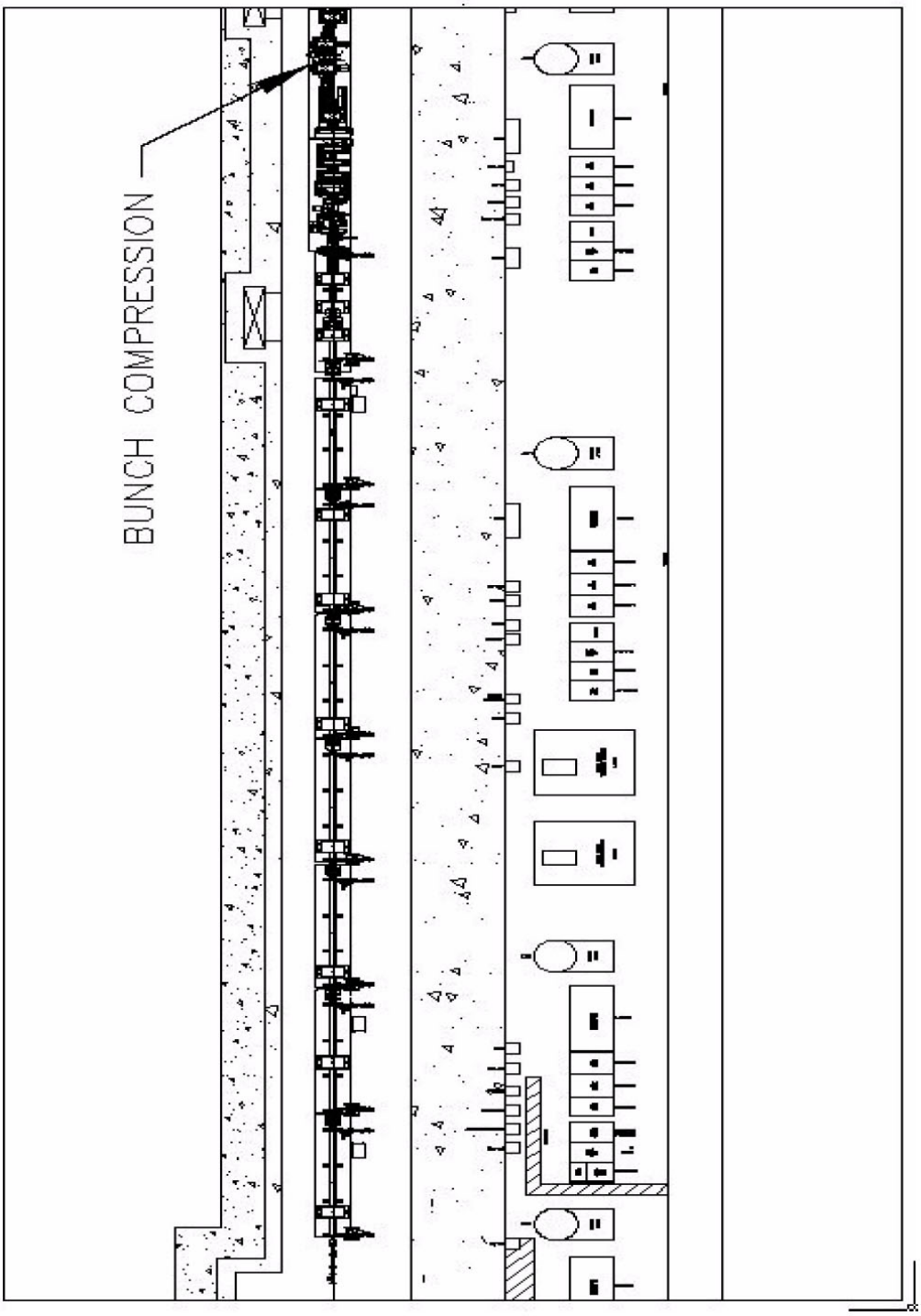

A dipole spectrometer magnet is located in the LET line near the end of the upstream linac and is energized to permit beam energy measurements. During normal operation, this magnet is off. The bend angle of the electrons through this magnet is a function of the beam momentum and the magnetic field strength. The magnet is powered by a 20- kW power supply at 16 V DC and a current of less than 600 A. Temperature sensors on the magnet coil are interlocked to the power supply. Two shielded aluminum beam stops absorb the electrons and electron beams during energy measurements when the dipole magnet is energized. The beam stops are not water cooled, but are equipped with thermal interlocks to prevent energizing of the electron gun in the unlikely event that the temperature exceeds 100° C. The beam stops function as Faraday cups, allowing for cross calibration with the other beam diagnostic instruments, and optimization of beam parameters.

3.3.8 Linac Operating Conditions

The linac will operate under one or more of the following nominal conditions:

- 325-MeV e^- injected to the PAR for eventual use by the synchrotron
- up to 700-MeV e^- on the lead beam stop in the LTP line
- up to 700-MeV e^- injected into the PAR bypass line and on into the LEA vault

3.4 APS Linac Extension Area (LEA) - Technical Facilities Description

3.4.1 General Overview

The APS Linac Extension Area (LEA) is a general purpose facility that can be used for testing diagnostics and other accelerator hardware with an electron beam. The LEA consists of:

- A high-brightness electron source (a thermionic or photocathode rf electron gun system) located at the head of the linac.
- Two beam transport lines, similar to the LET and HET lines, that allow the electron beam to bypass both the PAR and booster synchrotron. These are known as the PAR Bypass (PB) and Booster Bypass (BB) transport lines, respectively.
- A beam tunnel (Building 413).
- A flexible beam transport system to deliver beam to devices under test.
- An end-station building suitable for instrumentation, preparation etc.

During LEA operation, the APS linac (section 3.3) accelerates electrons to beam energies of up to 700 MeV into the beam tunnel. (Operation at 700 MeV assumes 45-MW klystrons are installed and operated at maximum power with SLED

operations enabled, the sector phasing is set for maximum energy gain, and the bunch compressor is moved to an in-line configuration.)

3.4.2 PAR and Booster Bypass Beamline Systems

After acceleration through the APS linac, the electron beam enters the linac-to-PAR (LTP) transport line. In LEA operation mode, rather than being directed by a dipole magnet (LTP:B1) towards the PAR, the electron beam is allowed to proceed in a new, short transport line section, bypassing the PAR. This line is called the PAR bypass line and is shown in Figure 3.7.

Installed at the upstream end of the PAR bypass line is a double beam stop. This is composed of two separate 3" tungsten cubes each on their own pneumatic actuators. These are inserted into the path of the beam to prevent radiation from entering the booster vault if the booster tunnel is not in Beam Permit Mode. The upstream tungsten block is electrically isolated and monitored to determine if it is being struck by the electron beam. These tungsten blocks are not meant to be full-power beam stops, and consequently all operational electron gun systems are disabled if the double stop is inserted and the upstream LTP:B1 dipole is off. Compressed air at 90 psi is used to retract these beam stops.

The PAR bypass (PB) line enters the booster enclosure and directs the beam into a short section of the PAR-to-booster (PTB) transport line. Ordinarily the PTB line would, by means of a pulsed dipole magnet (PTB:B2), direct the beam to the booster injection septum magnet. However, during LEA operation the dipole magnet is off and the beam proceeds into a new line allowing it to bypass the booster. This line

Figure 3.7 PAR Bypass Beam Transport Line

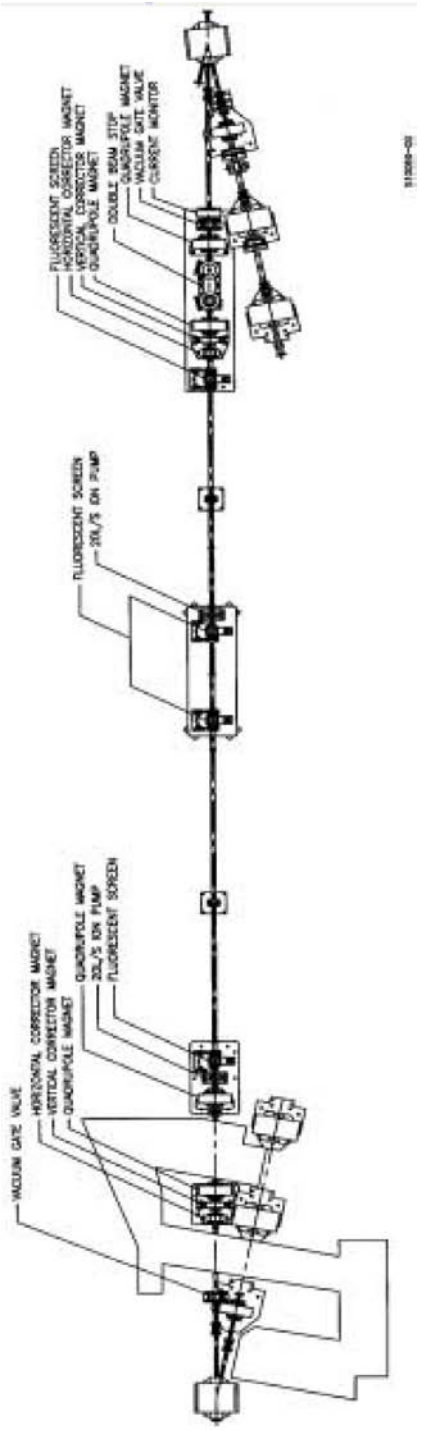

is called the booster bypass (BB) line and is shown in Figure 3.8. During its transit of the booster enclosure, the booster bypass portion of the LEA translates the beam upward one meter using a pair of vertical bending magnet systems spaced approximately 40 m apart. These two bending magnet systems also function as controlled equipment to prevent the electron beam from reaching the LEA enclosure while it is occupied. The geographical end of the booster bypass line terminates at the shield wall separating the booster radiation enclosure from that of the LEA tunnel.

Installed at the downstream end of the booster bypass line is a beam radiation stop. This is composed of one 3" tungsten cube on its own pneumatic actuator. This is inserted into the path of the beam to prevent radiation generated within the booster vault from entering the LEA tunnel while the LEA tunnel is in Authorized Access Mode. Compressed air at 90 psi is used to retract beam stop.

Just beyond the connection between the PTB and the BB lines and just beyond the first set of vertically upward bending magnets lies an intermediate beam dump. A vertical bending magnet directs the beam downward to a heavily shielded water-cooled beam dump. This intermediate dump can handle the 1- kW beam power and is used to tune up the beam prior to sending it into the LEA enclosure.

3.4.2.1 PB and BB Beam Transport Line DC Magnets

- Thirteen quadrupole magnets: These magnets have a bore radius of 20 mm and produce a maximum gradient of under 23.4 T/m, giving a maximum pole-tip field of under 0.47 T. The magnets are individually energized by 60-A, 10-V DC power supplies.

- Eight steering magnets: The four horizontal steering magnets have clear apertures of 4 cm and effective lengths of 12 cm. They produce peak fields of under 0.15 T and are energized by 12-A, 36-V bipolar DC power supplies. The four vertical steering magnets have clear apertures of 7 cm and effective lengths of 15 cm. They produce peak fields of under 0.12 T and are energized by 12-A, 36-V bipolar DC power supplies.

- Two vertical bends: Each vertical bend is composed of three vertical steering magnets as used elsewhere along the beamlines, wired in series. The first bend pitches the beam upward at an angle of 1.43°. After approximately 40 m the beam has gained 1 m in altitude and is pitched -1.43° back to horizontal by the second vertical bend. These magnets have a 70-mm gap and produce a maximum horizontal field of 0.12 T. Each set is wired in series and energized by separate 20-A, 100-V DC power supplies.

Figure 3.8 Booster Bypass Beam Transport Line Schematic including the Intermediate Beam Dump

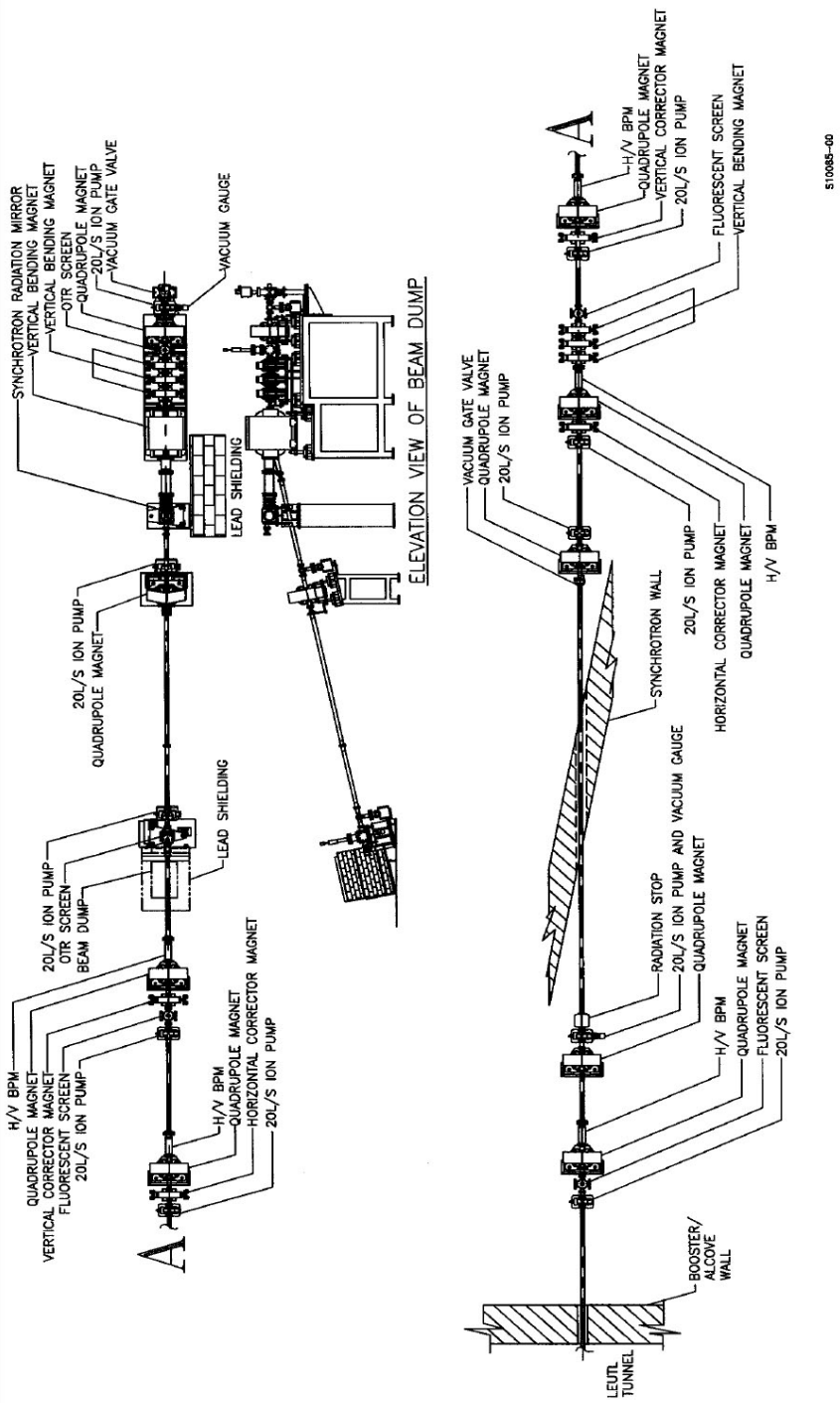

- One beam dump dipole magnet: This magnet deflects the beam vertically to a beam dump on the floor of the synchrotron enclosure. It has a 40-mm gap and produces a maximum horizontal field of 0.75 T. The vertical bend angle is 11.4°. The magnet is powered by a 200-A, 20-V DC power supply.

3.4.2.2 PB and BB Beam Transport Line Vacuum Systems

- Eleven ion pumps: These pumps maintain high vacuum in the PB and BB lines. Voltages up to 6 kV are used.

- Four gate valves: These valves are used to isolate the PB and BB lines from other sections of the linac, PAR, and booster beamlines. These valves use 90- psi compressed air.

- Five vacuum ion gauges: The gauges monitor the pressures in the PB and BB lines and also at the booster beam dump. Voltages up to 1500 V are used.

3.4.2.3 PB and BB Beam Transport Line Diagnostics

- Ten beam position monitors: These are nonintercepting rf beam position monitors similar to those used in the linac.

- Nine fluorescent/optical transition radiation (OTR) screens: These screens are provided to monitor beam shape and position in the beamlines. The insertion actuators for these screens use 90-psi compressed air.

3.4.3 LEA Tunnel Beam Transport Line System

After traversing the PB and BB lines, the beam travels through a vacuum tube in the shield wall that separates the LEA tunnel from the radiation environment of the booster. This defines the start of the LEA-tunnel transport line. By its nature, the LEA system is highly flexible and may be used in a variety of configurations. Regardless of the configuration, at the downstream end of any vacuum or beam transport system that may be installed in LEA there is adequate space for an appropriate beam dump, ensuring that beam can be safely dumped. This minimizes radiation hazards in occupied areas. One configuration of the LEA beam transport line system is shown in Figure 3.9.

Figure 3.9 Schematic of the LEA Beam Transport Line System

Figure to be added

3.4.4 LEA End Station

An end-station room is located in the building at the end of the LEA tunnel. This building is outside of the radiation environment, allowing people free access while beam is in the LEA tunnel.

3.4.5 LEA Operating Envelope

The operating envelope is identical to that of the APS linac operating with electrons at its maximum energy of 700 MeV and at a total average beam power of 825 W. (This is equivalent to an average beam current of 1.18 μA at 700 MeV.) This envelope encompasses the full length of the LEA system from the electron source and linac through the PB and BB lines, and through the LEA beam transport line to the beam dump within the LEA tunnel.

3.5 APS Particle Accumulator Ring Technical Facilities Description

3.5.1 General Overview

The APS particle accumulator ring (PAR), located in Building 412, is a 450-MeV electron storage ring that accumulates electrons from the linear accelerator for injection into the synchrotron. (Normally the linac and PAR are operated at 325 MeV for use with the synchrotron.) Figure 3.10 shows a plan view of the PAR, which has a circumference of 30.6667 m, 1/12 that of the synchrotron. The magnetic "lattice" comprises 8 45-degree bending magnets, 16 quadrupole magnets, and 10 combined sextupole/steering magnets. Injection and ejection are accomplished using a single pulsed septum magnet, along with three fast kicker magnets. Two rf systems are present in the PAR; one a 9.77-MHz fundamental system, the other a 117.3-MHz twelfth-harmonic system.

Two beam transport lines are used to bring the beam to the PAR from the linac and to take the beam from the PAR to the injector (booster) synchrotron. The former is known as the LTP (linac-to-PAR) line, and is shown in Figure 3.11. The latter, known as the PTB (PAR-to-booster) line, is shown in Figure 3.12. Together the LTP and PTB comprise 3 dipole magnets, 21 quadrupole magnets, and 15 steering magnets. Each of the beamlines is approximately 19 m long. Figure 3.13 shows how the lines are situated relative to the PAR.

Figure 3.14 shows the operating cycle of the PAR, which lasts 500 ms and is repeated every time charge is injected to the booster and storage ring. At the beginning of the cycle, there is no stored beam, and only the fundamental rf system is on. During the next 200 ms, up to 6 electron pulses from the linac are injected via the LTP into the PAR at a maximum rate of 30 Hz . After the last bunch of the train is injected, the twelfth-harmonic rf system is activated. During the remaining 283 ms of the cycle, the beam is damped by synchrotron radiation and compressed by the twelfth- harmonic rf. Satellite bunches are removed by bunch cleaning. At the end

of the cycle, the beam is ejected into the PTB for transport to the injector synchrotron.

3.5.2 Particle Accumulator Ring Components

The PAR is comprised of the following components, as shown in Figure 3.10.

Figure 3.10 Positron Accumulator Ring Plan View

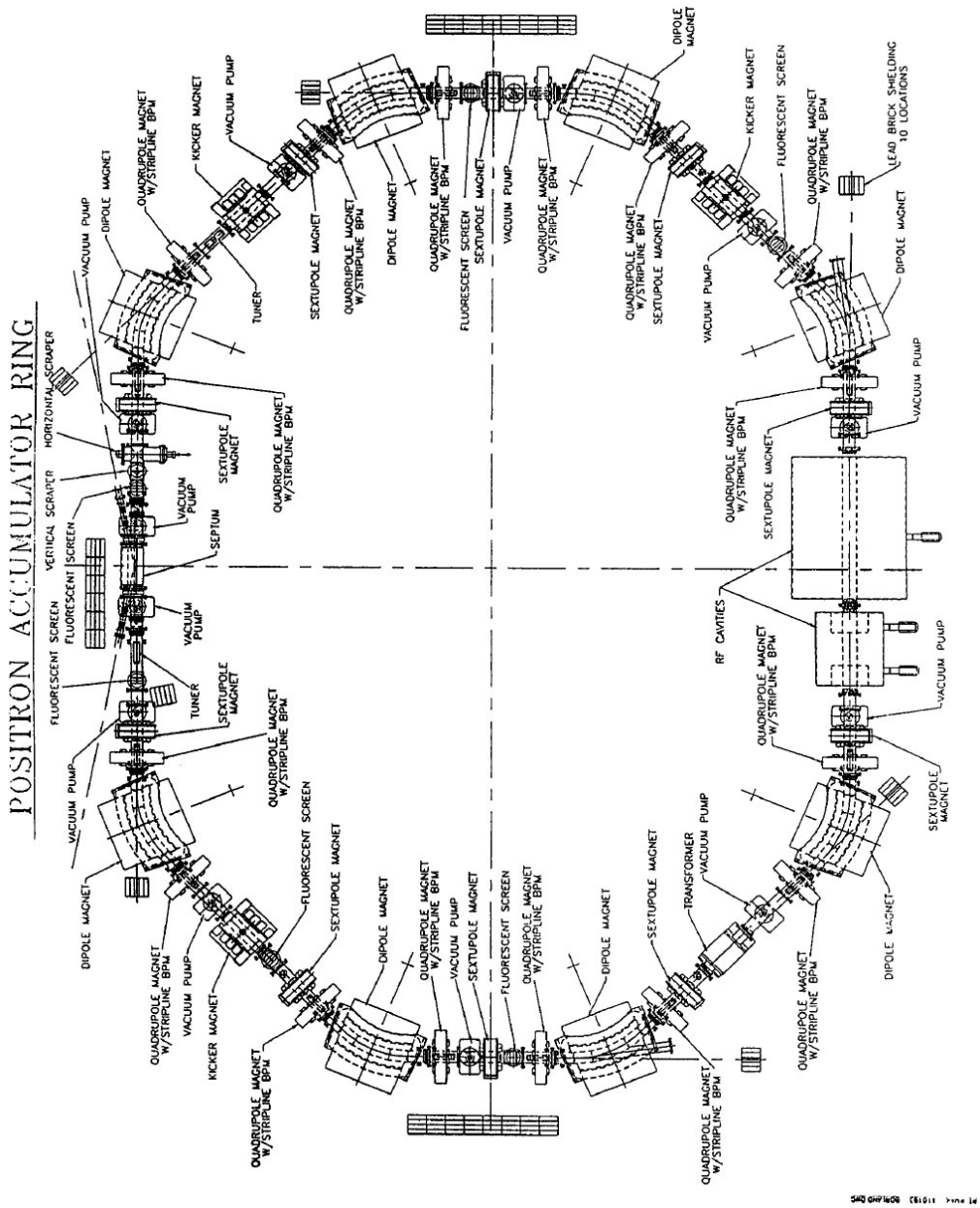

Figure 3.11 Linac-to-PAR (LTP) Beam Transport Line

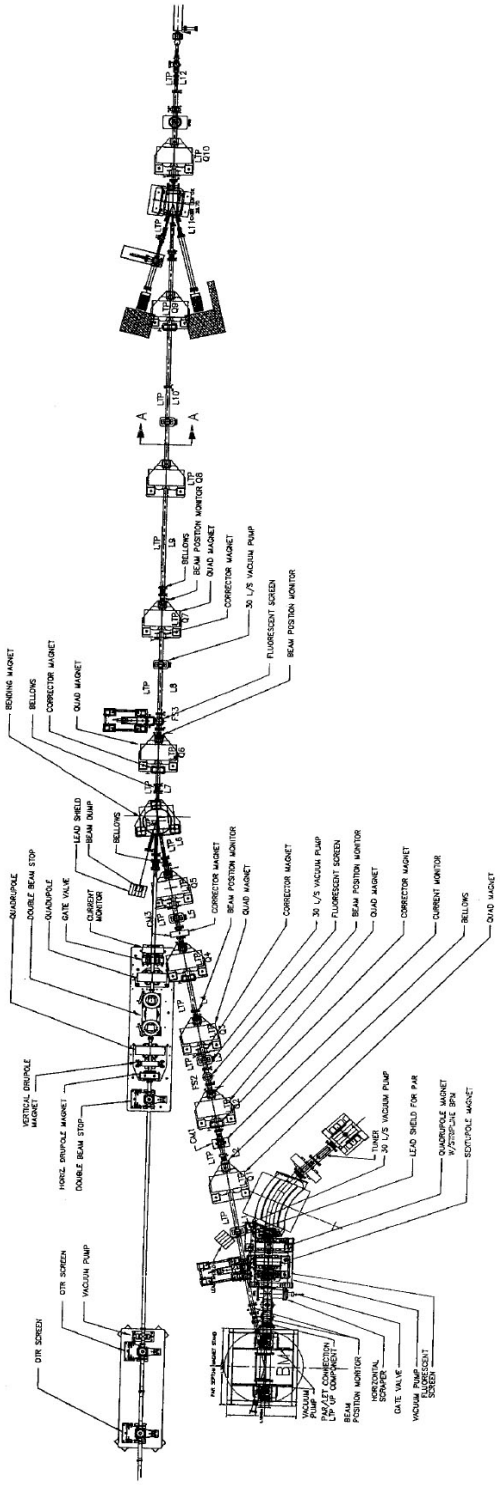

Figure 3.12 PAR-to-Booster (PTB) Beam Transport Line

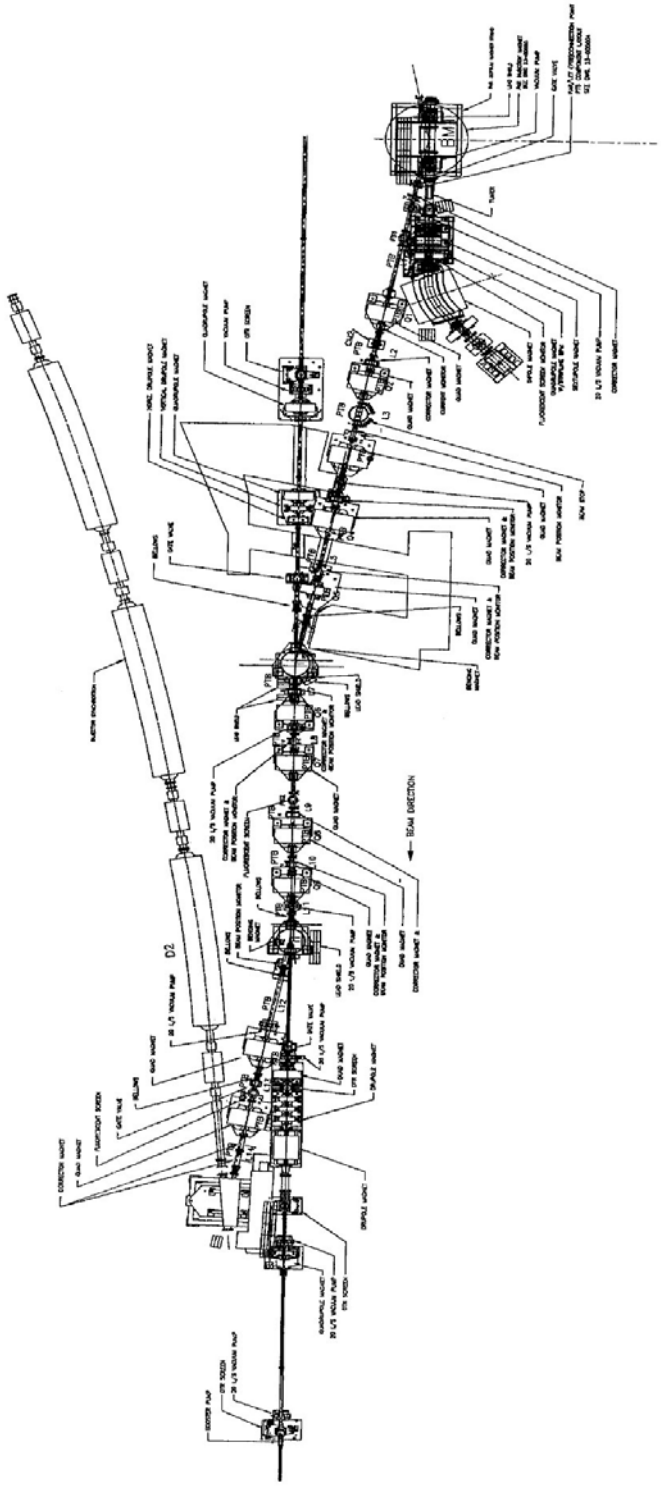

Figure 3.13 Location of Beamlines Relative to the PAR

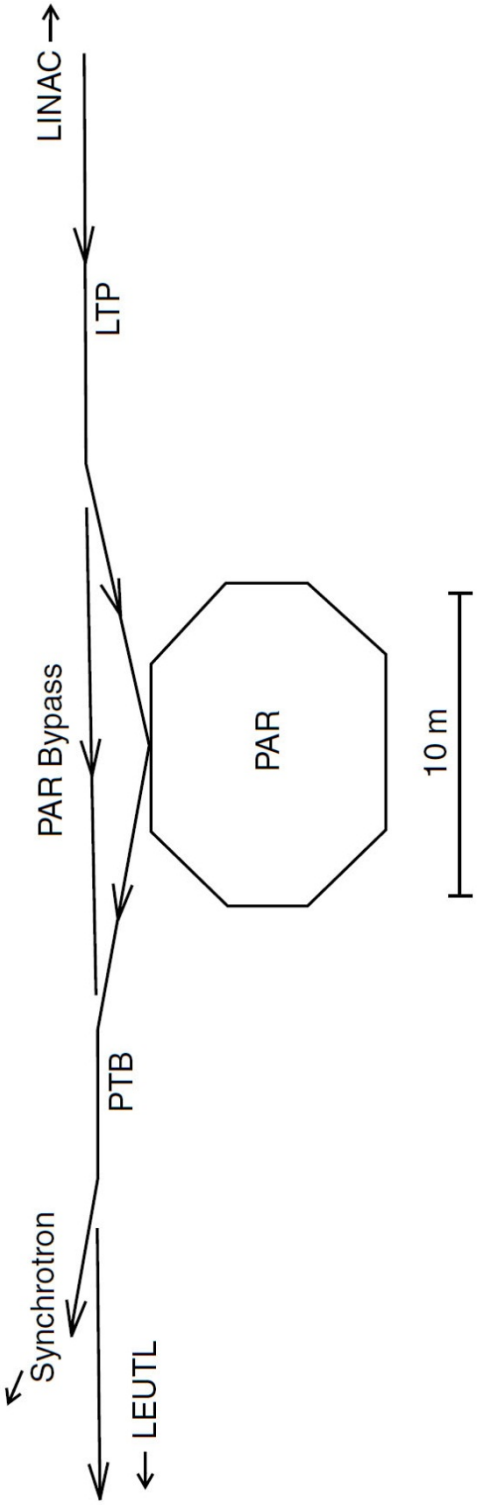

Figure 3.14 PAR Operating Cycle

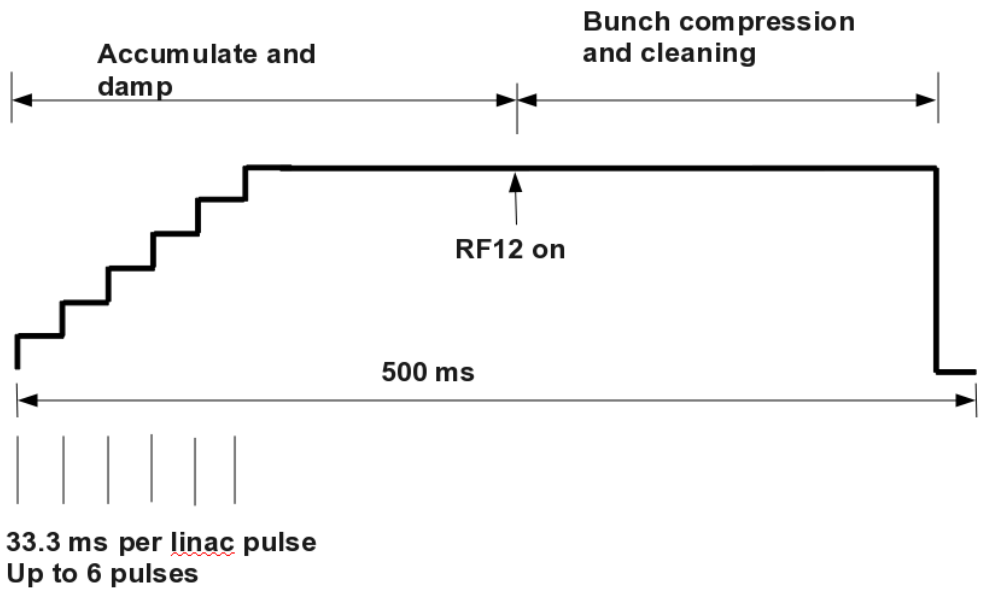

3.5.2.1 PAR DC Magnets

- Eight dipole magnets: The dipole magnets have a 45-mm gap and produce a field of 1.47 T, bending a beam of 450-MeV electrons through a 45-degree angle. The magnets are energized by a single 420-A, 335-V DC power supply. In addition, each dipole has a trim winding, which is individually powered by a ± 10-A, ± 20-V DC power supply.

- Sixteen quadrupole magnets: These magnets, organized into four families of four magnets each, provide focusing of the electrons, with a maximum gradient of 4 T/ m. With a 65-mm bore radius, the maximum pole-tip magnetic field is 0.26 T (2.6 kG). Each of the families is energized by a separate 160-A, 60-V DC power supply.

- Ten sextupole/steering magnets: These magnets are used both to produce sextupole and dipole fields. The sextupole windings are configured to produce three families (two with four members, one with two members). The dipole windings are independent between magnets, giving ten independent steering elements per transverse plane. The pole-tip magnetic field is under 0.3 T (3 kG). The sextupole windings are powered by three 5-A, 55-V power supplies. Each of the steering dipole elements is powered by a separate ± 20-A, ± 20-V DC power supply.

3.5.2.2 PAR Pulsed Magnets

- Pulsed septum magnet: This magnet is pulsed with a 1.5-kHz half sine-wave at a 30-Hz rate during injection and ejection. The maximum magnetic field is 0.75 T (7.5 kG). The peak current into the magnet is 14.2 kA. The maximum power supply output voltage is 2 kV.

- Three fast kicker magnets: These magnets are pulsed for injection and ejection at a 60-Hz rate with a 200-ns FWHM waveform producing a maximum magnetic field of 0.6 T (6 kG). There are separate supplies for each magnet, each providing a peak current of 2.5 kA and a peak voltage of 50 kV.

3.5.2.3 PAR rf Systems

- First-harmonic rf system: This is the primary rf system, used to restore the energy that electrons lose to synchrotron radiation and to perform most of the bunch length compression. The cavity is a quarter-wavelength folded coaxial configuration. The system operates at 9.78 MHz with maximum gap voltage of 40 kV, requiring under 5-kW of rf power.

- Twelfth-harmonic rf system: This secondary rf system is used to complete compression of the bunch length. The cavity is a half-wavelength design with the accelerating gap in the center. The system operates at 117.3 MHz with a maximum gap voltage of 30 kV, requiring under 2-kW of rf power.

3.5.2.4 PAR Diagnostics

- Six fluorescent screens: These beam-intercepting diagnostic devices are used to determine the spatial profile and position of the beam, principally during commissioning. Pneumatic actuators are used to insert and remove the screens.

- Two photon beam ports: These ports allow synchrotron radiation from two of the dipole magnets to be brought outside the PAR vacuum chamber, where the visible portion can be directed outside the PAR enclosure and used to produce images of the beam profile.

- Sixteen beam position monitors: These non-intercepting diagnostics devices provide for measurement of the closed orbit of a circulating beam. Each consists of four stripline pickup elements.

- Two tune measurement striplines: These non-intercepting diagnostics devices provide for measurement of the horizontal, vertical, and longitudinal tunes. One of the pair is driven using a signal generator, while the response of the beam is monitored on the other device.

- Two current monitors: These non-intercepting diagnostics devices provide measurement of the average beam current and the bunch current profile. They consist of toroids of wire-wound ferrite material next to a ceramic break in the vacuum chamber, and hence act as transformers with the beam providing one circuit.

3.5.2.5 PAR Vacuum System

- Twelve vacuum ion pumps: These devices are used to pump-down and maintain the pressure in the PAR. A voltage of 6 kV is used.
- Four vacuum pressure gauges: These devices are used to monitor the pressure in the PAR, and have 75 V applied to them.
- Chamber bakeout system: In order to allow a lower vacuum pressure to be achieved, the PAR chamber is equipped with electrical heating tapes capable of bringing the temperature of the chamber to 150° C.

3.5.3 Low Energy Transport Line Components

The LTP and PTB transport lines, collectively known as the low energy transport or LET, are comprised of the following components, as shown in Figure 3.11 and Figure 3.12.

Included in this section are those components of the low-energy transport line used to transport beam from the linac to the PAR and from the PAR to the synchrotron. Those components used to bypass the PAR and to transport beam from the LET to the LEA facility are described in section 3.4.2.

3.5.3.1 LET DC Magnets

- Three dipole magnets: The dipole magnets have a 40-mm gap and produce a maximum field of 1.2 T. The nominal bending angle is approximately 12 degrees. The magnets are individually energized by 350-A, 600-V DC dual level pulsed power supplies.
- Twenty-one quadrupole magnets: The quadrupole magnets have a bore radius of 32 mm and produce a maximum gradient of under 12 T/m, giving a maximum pole-tip field of under 0.4 T. The magnets are individually energized by 23-A, 105- V DC power supplies.
- Sixteen steering magnets: The steering magnets are of a window-frame design. Each produces either a horizontal or a vertical field of under 0.2 T, providing steering in either the vertical or the horizontal plane, respectively. The magnets are individually energized by ± 5-A, ± 20-V DC power supplies.

3.5.3.2 LET Diagnostics

- Six fluorescent screens: These beam-intercepting diagnostic devices are used to determine the spatial profile and position of the beam, principally during commissioning. Pneumatic actuators are used to insert and remove the screens.

- Eighteen beam position monitors: These non-intercepting diagnostic devices provide for measurement of the trajectory of a beam. Each consists of two stripline pickup elements, and measures the beam position in either the horizontal or vertical plane.

- Two current monitors: These non-intercepting diagnostics devices provide measurement of the amount of charge in each beam bunch. They consist of integrating current transformers (ICTs), with the beam acting as the primary circuit. The ICTs produce an output pulse that is processed to obtain an accurate measurement of the beam current in milliamperes.

3.5.3.3 LET Vacuum System

- Eleven vacuum ion pumps: These devices are used to pump-down and maintain the pressure in the LET. A voltage of 6 kV is used.

- Four gate valves: These remotely-controlled valves are used to isolate the vacuum in the LET from that in the linac, PAR, and synchrotron. They are inserted and removed by pneumatic actuators.

3.5.4 PAR Operating Envelope

The operating envelope is the range of beam energies and intensities within which the ring will be operated. It is relevant to the safety of operation in that beam energy and the potential amount of beam loss per unit time determine the total radiation produced. Since the PAR and its associated transport lines neither create nor accelerate electrons, their operating envelope is limited by that of the linac.

More specifically, the stored current in the PAR is not a directly relevant parameter. It is relevant only insofar as the linac current is determined by the circulating current desired at the end of each PAR cycle. The circulating current design performance goal for the PAR is 6.0 nC stored charge. This requires an average current of 12 nA from the linac at 450 MeV, which defines the performance goal for the linac. The average beam power under these conditions is 5.4 W.

The PAR operating envelope is defined as the maximum average beam power that will intentionally be delivered to the PAR. It has been chosen to be 10 W, which is 50% of the safety envelope defined in section 5.1.2. At 500 MeV, this corresponds to a maximum average current injected into the PAR from the linac of 20 nA, equivalent to a maximum stored charge of 10 nC every 0.5 second PAR cycle.

The design performance goal energy of the PAR is 450 MeV. The dipole power supply is capable of providing current sufficient to bring the PAR to no more than 500 MeV.

3.6 APS Injector Synchrotron Technical Facilities Description

3.6.1 General Overview

The APS injector synchrotron, Building 415, is used to raise the electron beam energy from 325 MeV to 7 GeV. A complete cycle occurs in 500 ms with the actual acceleration lasting only 225 ms. The typical operating parameters of the synchrotron are shown in Table 3.2.

The machine is 368 m in length. Its shape roughly resembles a racetrack with two identical arcs 147.2 m in length, two long straight sections of length 18.4 m, and four sections of length 9.2 m which are distinguished by a “missing” dipole. The straight sections are used for injection, extraction, and some diagnostics. They also contain the rf cavities (see Figure 3.15).

A single cycle of the machine proceeds as follows: The electron beam from the PAR is injected into the synchrotron by way of the PTB (PAR-to-booster) transfer line. On-axis injection is accomplished by proper timing and amplitude adjustment of the injection pulsed septum and kicker magnets. The primary synchrotron magnets are energized to levels proper for accepting the 325-MeV incoming beam.

Table 3.2 Synchrotron Operating Performance Goals

Circumference	368.0	m
Revolution Time	1.228	μs
Design Performance Goal Energy	7.0	GeV
Maximum Attainable Energy	7.7	GeV
Injection Energy	> 300 MeV	MeV
Cycle Period	500	ms
Acceleration Time	225	ms
Average Beam Current	4.9	mA
Nominal Charge per Cycle	6	nC
Injected Beam Emittance	0.36	mm-mrad
Natural Emittance at 7 GeV	0.132	mm-mrad
Energy Loss/Turn at 7 GeV	6.33	MeV/turn

The bunch of electrons are captured by the rf in one of the 432 rf buckets. The magnet fields are ramped up linearly and, simultaneously, the rf fields are increased. The energy of the electrons is raised to 7 GeV. A typical ramp cycle of the dipole magnets is shown in Figure 3.16. When the beam energy has reached 7 GeV, the bunch is extracted from the synchrotron, directed into the 65.09-m-long high energy transport (HET) line (see Figure 3.18), and then guided into the storage ring. Extraction from the synchrotron is accomplished similarly to injection; the extraction kicker and septum magnets are pulsed at the correct time and with the correct amplitudes to change the beam orbit in such a way that its trajectory goes into the HET line.

Figure 3.15 Layout of the Injector Synchrotron

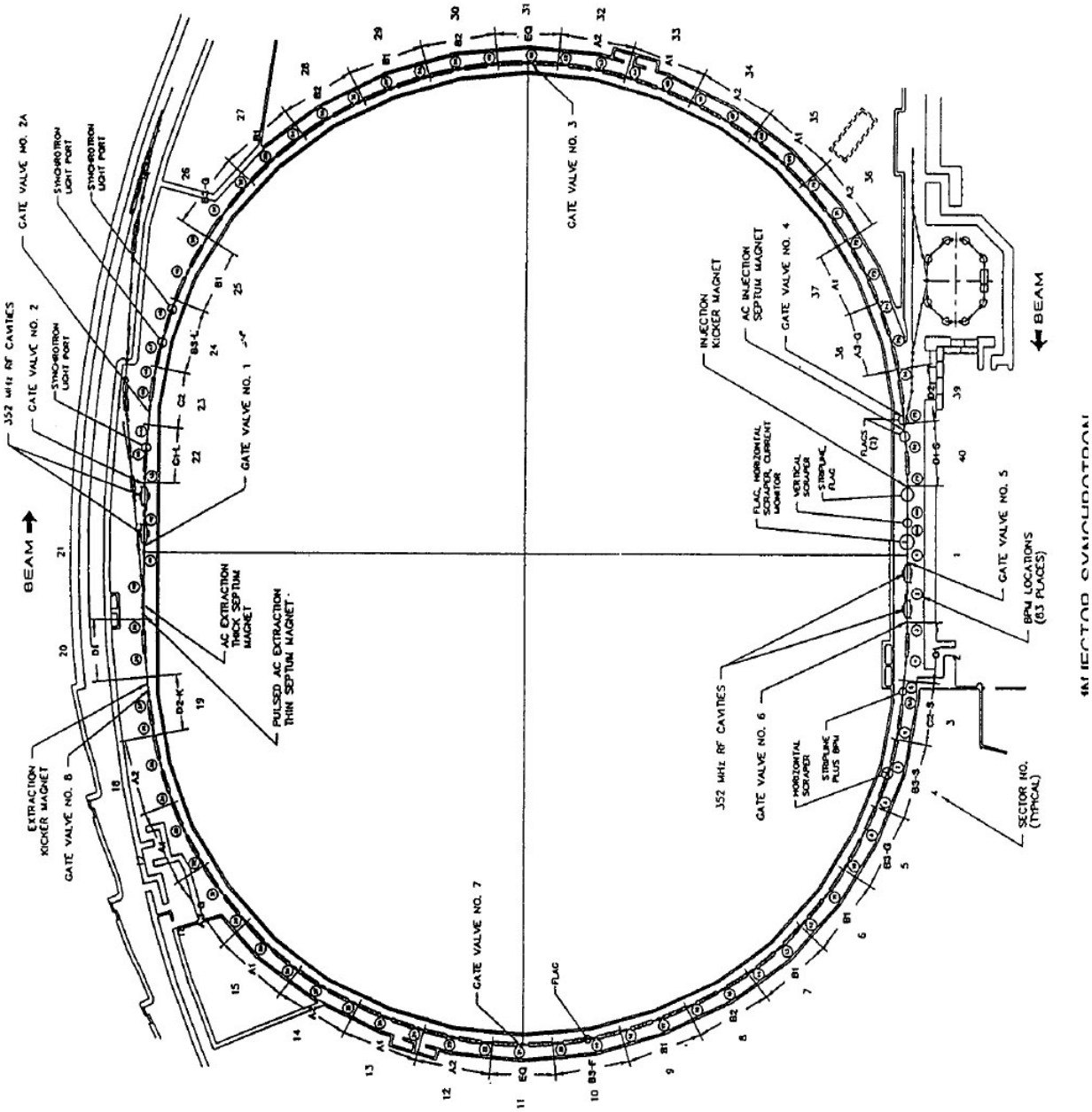

3.6.2 Injector Synchrotron Components

3.6.2.1 Synchrotron Magnets and Power Supplies

The primary magnets in the machine are the dipole, quadrupole, and sextupole magnets. Each is of a conventional lamination design and is constructed in two halves thus permitting the coils to be installed around each pole and also allowing the magnets to be assembled around the vacuum chamber. Each magnet has one coil per pole made of hollow copper conductor insulated with fiberglass which is vacuum impregnated with epoxy resin. The magnets are water cooled.

- Synchrotron Magnet Descriptions

  There are 297 magnets in the synchrotron. Of these, 68 dipole magnets are used to bend the beam through 360°. Eighty quadrupole magnets provide the horizontal and vertical focusing required to keep the beam in the vacuum chamber. The 64 sextupole magnets compensate for the chromatic effects of the quadrupole magnets. There are 40 horizontal and 40 vertical corrector magnets. These are used to correct orbit errors caused primarily by variations in the strength of the dipole magnets and by errors in the position of the quadrupole magnets. The five pulsed magnets are used to inject and extract the electrons from the synchrotron.

  Solid copper conductor is used for the magnet coils in the 40 horizontal and 40 vertical corrector magnets. Cooling is provided by a water-cooled plate which runs through the coil.

  The parameters for the injector synchrotron magnets are listed in Table 3.3. All the magnets are optimized for operation at 7 GeV and are capable of 7.7-GeV operation.

  The magnets are supported on stands made of box beams. Except for the dipole magnet, each magnet rests on a riser which allows complete adjustment to align the magnet to the desired position.

Figure 3.16 Injector Synchrotron Dipole Ramp Cycle

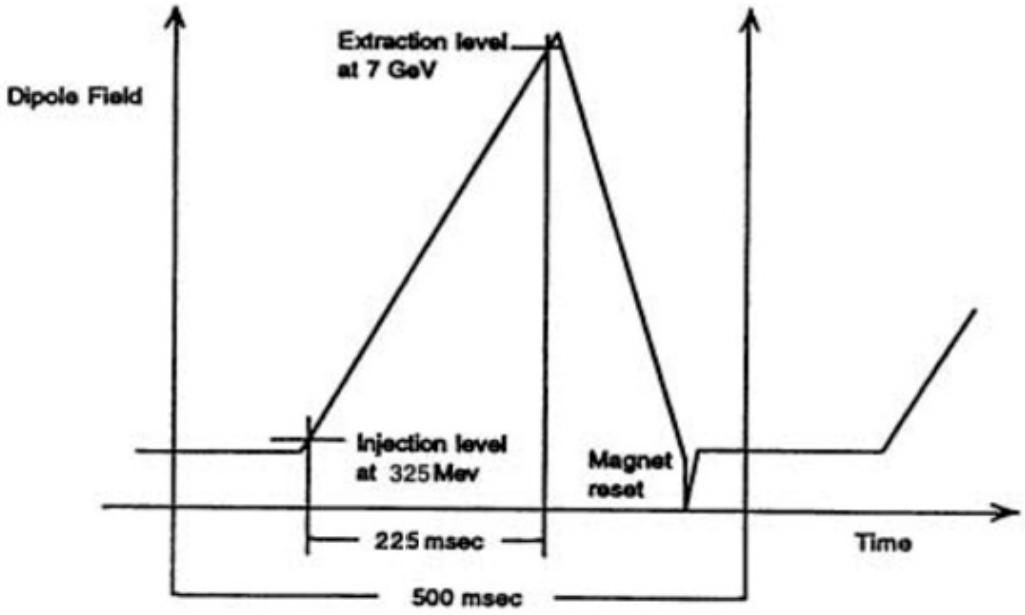

The injector synchrotron dipoles are rigid, welded structures with sufficient stiffness to be supported directly on 2-ton jacks with both vertical and horizontal adjustment capabilities. The jacks are mounted on magnet stands. Dipoles bridge the gap between two adjacent stands. The quadrupole, sextupole, and corrector magnets are mounted onto individual supports which in turn are mounted onto a magnet stand. A standard cell is shown in Figure 3.17.

- Synchrotron Magnet Power Supplies

Various power supplies are used to energize the ramping synchrotron magnets. Two identical supplies are used for the 68 dipole magnets. They operate in a master/slave mode. The dipole magnets are connected in series with two power supplies connected at the opposite points across the ring in a push-and-pull configuration. There are also two identical quadrupole power supplies. Each supply provides current for 40 quadrupoles and both operate independently. The sextupole power supplies are arranged similar to the quadrupole supplies; each powers 32 sextupoles and both run independently of one another. Each of the 80 corrector magnets has its own independent supply. Independent arbitrary function generators (AFGs) are used to control all magnet power supplies. The AFG FIFO memories are loaded so that each family of magnets has the desired fields during the course of the ramp. Table 3.4 lists the characteristics of the supplies. All supplies are located outside the synchrotron tunnel.

Table 3.3 Injector Synchrotron Magnet Parameters at 7-GeV Operation

	Dipole	**Quadrupole**	**Sextupole**	**H Corrector**	**V Corrector**	
Number Required	68	80	64	40	40	
Strength at 7 GeV	0.701 T	16.6 T/m	248 T/m2	0.12 T	0.14 T	
Effective Length	3.077	0.5	0.1	0.12	0.15	m
Gap Height or Diameter	40	56.56	70.0	40	70	mm
Supply Current						
max	1044	659	155	± 20	± 10	A
min	61	38	9.1	--	--	A
rms	548	357	84	19	15	A
Voltage Drop/ magnet	49	14.2	4.2	+26	±36	V
Power Loss/ magnet	5.4	2.3	0.2	0.5	0.5	kW
Total Water Flow	7.2	4.9	0.8	0.8	0.8	ℓ/min
Water Temp. Rise	13	7	5	10	10	° C
Stored Energy	302 kJ per family	12.59 kJ per family	292 J per family	14.5 J per magnet	25.6 J per magnet	

Figure 3.17 Injector Synchrotron Standard Cell

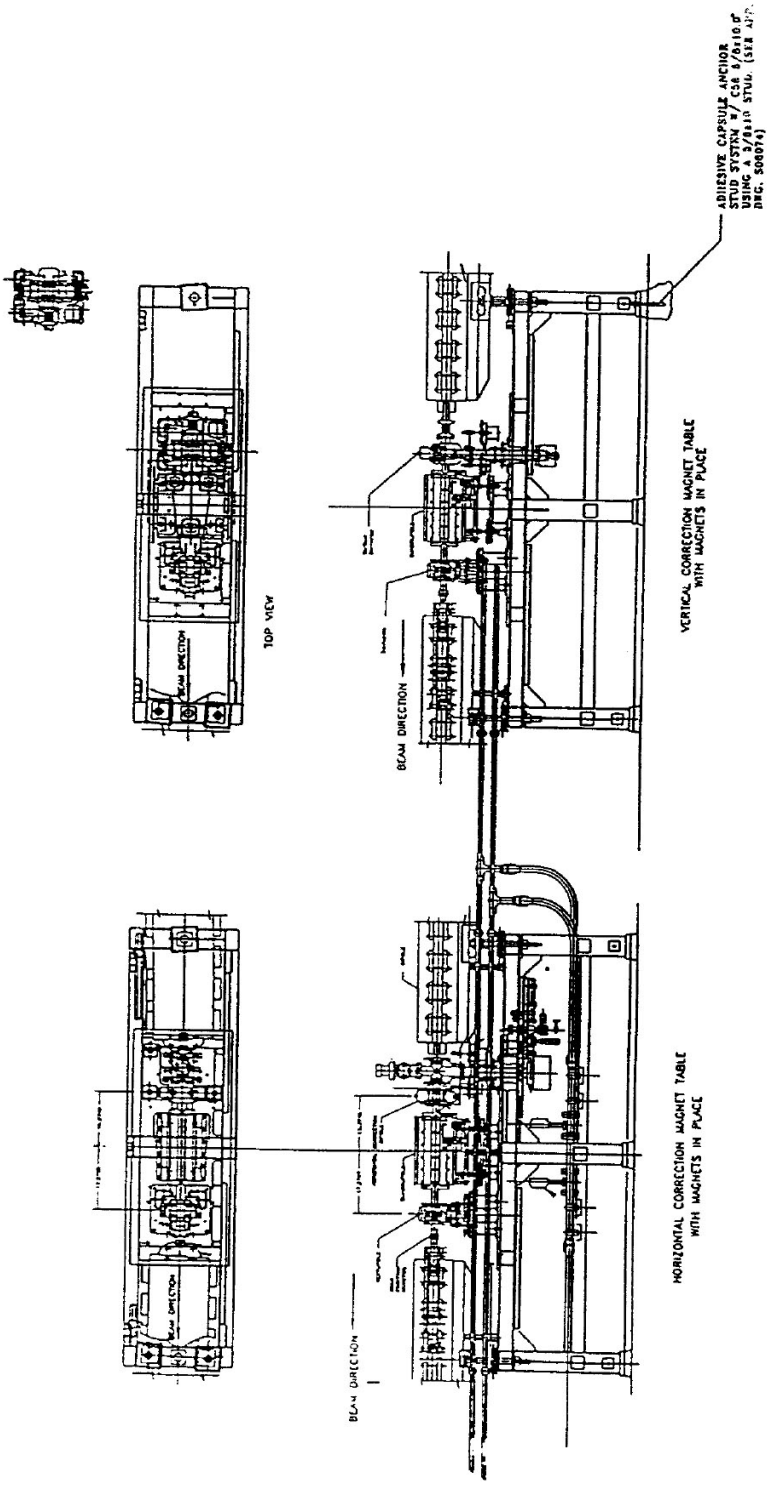

Table 3.4 Injector Synchrotron Magnet Power Supply Parameters

Magnet	Number of Units	I_{max} (A)	V_{max} (V)	P_{max} (kW)	P_{rated} (kW)	$\Delta I/I_{max}$ Repro-ducibility	$\Delta I/I_{max}$ Current Ripple	$\Delta I/I_{max}$ Tracking Error	Ref. Resol. (bits)
Dipoles	2	1044	+1822 -1055	1902	700	$\pm 1 \times 10^{-4}$	$\pm 2 \times 10^{-4}$	$\pm 5 \times 10^{-4}$	15
Quadrupoles	2	659	+681 -54	449	223	$\pm 1 \times 10^{-4}$	$\pm 2 \times 10^{-4}$	$\pm 5 \times 10^{-4}$	15
Sextupoles	2	155	+144	23	11	$\pm 2 \times 10^{-4}$	$\pm 3 \times 10^{-4}$	$\pm 5 \times 10^{-4}$	14
H Corr. Mag.	40	± 20	± 29	0.55	± 0.5				
						$\pm 1 \times 10^{-3}$	$\pm 1 \times 10^{-3}$	$\pm 4 \times 10^{-3}$	12
V Corr. Mag.	40	± 20	± 40	0.50	± 0.5				

3.6.2.2 Synchrotron Pulsed Magnets and Power Supplies

- Synchrotron Pulsed Magnets

Of the five pulsed magnets in the machine, two are used for injection and three for extraction. For injection, one septum magnet and one kicker magnet are used; for extraction, one kicker and two septum magnets are used.

The kicker magnets are of similar design, the primary difference is the lengths and the required field. The injection kicker is 25 cm long while the extraction kicker is 80 cm. The peak fields desired are 0.023 T (230 G) and 0.061 T (610 G), respectively. They are single-turn (two half turns of copper plate) ferrite core magnets with a picture-frame design. The kickers are enclosed in grounded conducting boxes in order to eliminate any possible disruption to nearby sensitive electronics when the kicker is pulsed. Tabe 3.5 lists the properties of these magnets.

There are two distinctly different septum magnet designs used. The injection and the first extraction septum magnets are thin transformer-type magnets with a single secondary and a single-turn, hollow conductor, water-cooled primary winding. The thickness of the septum wall is 2 mm. These magnets are typically referred to as the thin septum magnets. The second extraction septum is of a more conventional direct-drive design. The actual septum wall of this magnet is 30 mm thick. It is usually referred to as the thick septum magnet. Table 3.6 lists the properties of these three magnets.

Table 3.5 Kicker Magnet and Supply Parameters

	Injection Kicker	**Extraction Kicker**	
Rise Time	500	500	ns
Flat Top	29	29	ns
Fall Time	500	500	ns
Peak Voltage	2.9	19.0	kV
Peak Current	980	1970	A
Peak Field	0.031	0.062	T
Magnet Dimensions			
Gap Height	40	40	mm
Gap Width	57.5	57.5	mm
Effective Length	250	800	mm

- Synchrotron Pulsed Magnet Power Supplies:

  Each pulsed magnet has its own independent supply. These are located very close to the magnet itself but are outside the tunnel enclosure.

  The short current pulse for the kickers is generated using a pulse forming network (PFN). The PFN is charged up to the desired voltage and discharged through the magnet coils into terminating loads when the thyratron switch is triggered. Six parallel cables from the PFN, connected to a terminating load, make up the load.

  For the pulsed transformer septum magnets, the primary pulse is provided by a capacitor discharge power supply. These supplies produce a pulse that is approximately half-sine-wave in the case of the thin septum and full-sine-wave in the case of the thick septum. Relevant specifications for these supplies are shown in Table 3.6.

Table 3.6 Septum Magnet and Supply Parameters

	Inj. Thin	**Ext. Thin**	**Ext. Thick**	
Min. Septum Thickness	2	2	30	mm
Peak Field	0.49	0.73	0.979	T
Effective Length	850	1050	1750	mm
Gap Height	30	20	30	mm
Gap Width	40	34	40	mm
Number of Turns	1	1	36	
Total Inductance	0.002	0.003	5.51	mH
Peak Supply Current	11.816	11.740	0.656	kA
Peak Supply Voltage	185	299	1258	V
Pulse Frequency	1500 (1/2 sinewave)	1500 (1/2 sinewave)	50 (full sinewave)	Hz
Pulse Repetition Rate	2	2	2	Hz
Peak Power	30	62	80	kW
Average Power	0.020	0.042	0.797	kW

3.6.2.3 Synchrotron rf System

Four 5-cell rf cavities provide the accelerating voltage and longitudinal focusing to the beam. They also replenish the energy lost due to synchrotron radiation. These cavities are tuned to 351.929 MHz, the 432nd harmonic of the revolution frequency, and are essentially copies of the LEP/PEP 5-cell $\lambda/2$ resonant cavity. The four cavities are driven by a single 1-MW klystron identical to those used for the storage ring. Power is transmitted through waveguides from the klystron in the rf building to the rf cavities in the synchrotron tunnel. Injection is into a stationary bucket with a peak rf voltage of 400 kV (100 kV per cavity). The rf voltage is increased during the energy ramp cycle to match the increasing synchrotron radiation losses. At 7 GeV extraction, the rf voltage is 9.4 MV, and the synchrotron radiation loss is 6.33 MeV per turn. The energy gain per turn, over most of the cycle, is negligible compared to the synchrotron radiation losses. Table 3.7 lists the machine and beam properties relevant to the rf system.

Waveguide switches are provided to allow one of the storage ring klystron systems to be used in place of the synchrotron klystron system. A redundant pair of waveguide shutters are used to isolate the storage ring klystron system from the synchrotron cavities when the synchrotron's klystron is not in use. These shutters are monitored both by a dedicated control system and by the two interlock chains of the access control interlock system (ACIS) that provide personnel safety related to the tunnel enclosures.

Table 3.7 The rf System Parameters

rf Parameters		
Frequency, f	351.930	MHz
Harmonic Number	432	h
Voltage, V, at 7 GeV	9.5	MV
Synchrotron Frequency, f_s, at 7 GeV	21.1	kHz
Machine Parameters		
Circumference	368.0	m
Revolution Time	1.228	μs
Injection Energy	0.325	GeV
Nominal Energy	7.0	GeV
Maximum Energy	7.7	GeV
Repetition Time	0.5	s
Acceleration Time	0.225	s
Energy Loss Per Turn at 7 GeV	6.33	MeV/turn
Average Beam Current	4.9	mA
Energy Gain per Turn	38	keV

3.6.2.4 Synchrotron Diagnostics

Beam diagnostics systems are located about the entire ring. These are used to monitor the beam at all times. The types and quantities of the diagnostic instrumentation is listed in Table 3.8.

Table 3.8 Injector Synchrotron Beam Diagnostic Systems

Quantity	Component
1	Current monitor
80	Beam position monitors
3	Striplines for tune measurement and bunch cleaning
5	Fluorescent screen monitors for injection
2	Synchrotron light ports for photon beam monitor instruments

- Beam Position Monitor: Beam position in the synchrotron is measured using the 80 beam position monitors (BPMs) located around the machine. Each BPM consists of four button-type electrodes extending into the vacuum system. Coaxial cables connect these electrodes to the processing electronics. The electrodes and electronics are similar to those found in the storage ring. The monitors can measure beam position to an accuracy of better than 0.1 mm, with a total circulating current in the synchrotron of 5 mA.

- Current Monitor: A non-intercepting integrating current transformer (ICT), along with associated electronics, provides a measurement of the beam bunch charge. The ICT produces an output pulse which is processed to obtain an accurate measuremnt of the beam current in milliamperes.

- Stripline: Striplines are used to measure the tunes of the beam. Two sets of striplines are installed in the synchrotron. One set is used for very sensitive beam position detection. The other stripline is used to drive the beam over a broad range of frequencies.. This tune measurement system is similar to that used for the PAR and storage ring.

- Fluorescent Screens: A total of five pneumatically actuated fluorescent screen monitors are used for initial injection steering and tune-up of injection performance. These beam intercepting monitors are similar to those found around the rest of the facility.

- Synchrotron Light Monitor: Two special vacuum chambers are located in the northeast (quadrant 3) area of the machine. These allow the synchrotron radiation, which is generated in a bending magnet, to travel out of the vacuum

chamber. The visible to UV portion of this light is then guided by mirrors through holes in the synchrotron tunnel ceiling and on to optical stations outside the synchrotron tunnel. This light is used to directly view and characterize the beam in a noninvasive manner.

3.6.2.5 Synchrotron Vacuum System

The beam circulates within a vacuum chamber which extends around the entire length of the machine. The normal vacuum chamber is constructed from 1-mm-thick 316L stainless steel tubes formed to an elliptical cross-section with horizontal and vertical inner dimensions of 6 and 3.7 cm, respectively. This results in a thin metallic chamber without corrugations, which is smooth inside, allows maximum beam space in the magnets, and withstands atmospheric pressure.

Special ceramic chambers are used in the region of the kicker magnets. This is done to prevent the normal vacuum chamber from shielding, by eddy currents, the rapidly changing magnetic fields of these magnets. These ceramics are ≈5-mm-thick vacuum chambers with interior cross sections similar to the standard vacuum chamber. The insides of these chambers are coated with a partially conductive coating to reduce the impedance seen by the beam and to prevent static charge buildup on the ceramics.

To pump down from atmospheric pressure, portable oil-free mechanical pumps evacuate the vacuum system to ~6.7 kPa (~50 Torr) after which sorption pumps reduce the pressure to the turbomolecular pump starting pressure. Mobile turbomolecular pumps are then used to reduce the pressure to the ion pump starting pressure. Ion pumps are used as the primary pumping source to maintain an average pressure of 1.33 μPa (10 nTorr). These are spaced by ~4.6 m. The ion pumps require 6-kV power supplies for operation and are equipped with heaters for back-out.

Since ion pumps are uniformly distributed around the machine, monitoring their currents provides adequate pressure measurement. As a supplemental measurement of the vacuum quality, ionization gauges are also distributed uniformly around the ring. Pneumatically actuated ring isolation gate valves periodically spaced along the vacuum chamber eliminate the need for venting the entire ring to the atmosphere should repair in any one quadrant or rf station be necessary. Small isolation valves within each quadrant permit the mounting of gas analyzers or other monitoring equipment.

3.6.3 High Energy Transport Line Components

3.6.3.1 HET Magnets

There are 28 magnets in the HET line. The breakdown of specific types is as follows (see Figure 3.18):

- Four dipole magnets plus one extra are located along the line. The four are used to bend the beam into the direction of the storage ring. The extra magnet is used to bend the beam out of the primary HET line and into an auxiliary line leading to a beam dump up against the synchrotron tunnel wall.

- Twelve quadrupoles are used to focus the beam and match the machine functions between the synchrotron and storage ring.

- Eleven corrector magnets, identical in design to the synchrotron vertical correctors.

The dipole and quadrupole magnets are of conventional design. Both are constructed as two half cores thus permitting the coils to be simply installed around each pole and also allowing the magnets to be assembled around the vacuum chamber. Each magnet has one coil per pole made of hollow copper conductor insulated with fiberglass which is vacuum impregnated with epoxy resin. They are water cooled. These magnets were designed to operate in a DC mode; however, the extra dipole magnet may be ramped up and down more frequently in order to facilitate tune-up of the injection chain without the need to inject the beam into the storage ring. The parameters and power supply requirements of these magnets are listed in Table 3.9.

Figure 3.18 Layout of the HET Line

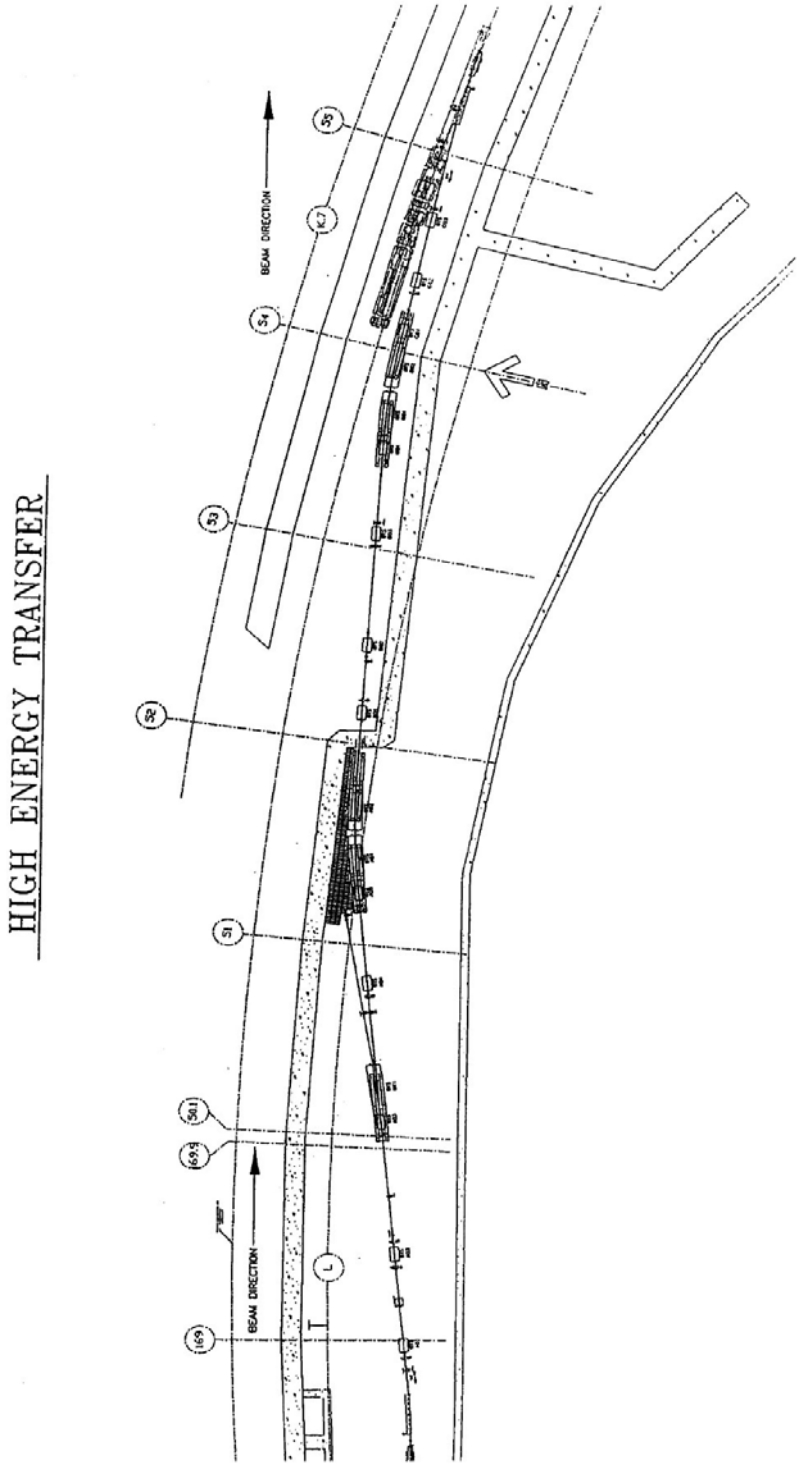

Table 3.9 HET Line Magnet Parameters

	Dipole	**Quadrupole**	**H Corrector**	**V Corrector**	
Number Required	5	12	6	5	
Strength at 7 GeV	0.899 T	17.73 T/m	0.14 T	0.14 T	
Effective Length	2.0	0.6	0.15	0.15	m
Gap Height or Diameter	33.34	33.34	70	70	mm
Supply Current Max	450	65	± 15	± 15	A
Peak Voltage	20	30	± 26	± 26	V
Power	9.0	1.95	0.5	0.5	kW

3.6.3.2 HET Diagnostics

Beam diagnostics systems are located all along the HET line. These are used to monitor the beam at all times. The types and quantities of the diagnostic instrumentation are listed in Table 3.10.

- Beam Position Monitor: Beam position in the HET line is measured using 15 single-plane stripline beam position monitors (BPMs) located along the line. Eight of these are dedicated to horizontal measurement and seven to vertical. These BPMs and their associated electronics are identical to those found in the PTB transfer line and have similar accuracy and resolution.

- Current Monitor A non-intercepting integrating current transformer (ICT), along with associated electronics, provides a measurement of the beam bunch charge. The ICT produces an output pulse which is processed to obtain an accurate measuremnt of the beam current in milliamperes.

- Fluorescent Screens: A total of six pneumatically actuated fluorescent screen monitors is used for initial steering and tune-up of synchrotron extraction and storage ring injection. These beam intercepting monitors are similar to those found around the rest of the facility.

Table 3.10 HET Line Beam Diagnostics Systems

Quantity	Component
1	Current monitor
8H × 7V	Beam position monitors: Single plane, stripline type
7	Fluorescent screen monitors for extraction/injection tune up

3.6.3.3 HET Vacuum System

The HET line vacuum chamber is made up primarily of 5.1-cm (2-in) O.D. 316L stainless steel pipe identical to that used in the PTB line. Within magnets, vacuum chambers of slightly smaller apertures are used. In the quadrupoles this consists of 4.9-cm (1-15/16-in) O.D. SS pipe, and in the dipoles a tube with 3.3-cm (1-5/16-in) vertical and 5.1-cm (2-in) horizontal clearance is used.

To pump down from atmospheric pressure, portable oil-free mechanical pumps are used to evacuate the vacuum system down to ~6.7 kPa (~50 Torr) after which sorption pumps reduce the pressure to the turbomolecular pump starting pressure. Mobile turbomolecular pumps are then used to reduce the pressure to the ion pump starting pressure. Ion pumps are used as the primary pumping source to maintain an average pressure of 1.33 ∝Pa (10 nTorr). The ion pumps require 6 kV for operation and are equipped with heaters for bake-out.

Since ion pumps are approximately uniformly distributed along the line, monitoring their currents provides adequate pressure measurement. As a supplemental measurement of the vacuum quality, ionization gauges are also distributed uniformly along the line. Pneumatically actuated isolation gate valves are installed at each end in order to facilitate repair and maintenance without contamination of the synchrotron or storage ring vacuum. Small isolation valves within each section permit the mounting of gas analyzers or other monitoring equipment.

3.6.4 Synchrotron Operating Envelope

The operating envelope for the synchrotron is 154 W at an energy of 7.7 GeV. This allows operations above the design performance goal of 84 W at 7 GeV without additional internal review, and is a factor of two below the safety envelope.

3.7 APS Storage Ring Technical Facilities Description

3.7.1 General Overview

The APS storage ring (SR) accelerator technical components can be broken down into eight major subsystems: magnets, power supplies, vacuum, radio frequency systems (rf), diagnostics, controls, insertion devices, and front ends. The accelerator itself is constructed from 40 sectors, each including five girders upon which magnets and vacuum chambers are supported, and terminated by long straight sections (approx. 5 meters). Thirty-five of these straight sections are configured for undulators or wigglers (insertion devices), which produce the high brightness x-ray beams. Additionally, 35 of the 80 dipole magnets are configured for extraction of synchrotron radiation. The ring circumference is 1104 meters.

Four rf stations are located along the ring circumference, each of which is composed of four rf cavities located in the long straight sections. Diagnostics are located periodically, most notably at more than 400 beam position monitor stations (9 to 12 per sector) mounted on the vacuum chambers. An additional straight section is reserved for injection hardware including pulsed magnets and special vacuum chambers. Inside the accelerator, but radially outboard of the accelerator proper are the x-ray front ends. These provide aperturing and shuttering of the high intensity x-rays and bremsstrahlung prior to their exit out onto the experiment hall floor.

The accelerator is located within a concrete shielded enclosure. Power supplies, vacuum diagnostics, beam diagnostics electronics, controls hardware, insertion device and front end controls, in addition to other instrumentation, are positioned outside, on top of the tunnel in electronics racks. Electrical connections to the accelerator are facilitated by S- shaped conduit penetrations through the enclosure roof, which prevent line of sight to the accelerator. The rf high power systems located in the rf/extraction building are connected to the cavities inside the tunnel with waveguides through specially shielded straight vertical penetrations in the tunnel roof. Shown in Figure 3.19 is the sector layout of typical storage ring in-tunnel components, including the girder/magnet/vacuum chamber assemblies and front-end components. Although no insertion devices are shown, the source points for both insertion device and bending magnet radiation are indicated. Also shown is the configuration of the tunnel shield wall and experiment hall floor outside of the tunnel. Parameters of interest for the storage ring are given in Table 3.11.

Figure 3.19 Sector Layout of Storage Ring In-Tunnel Components

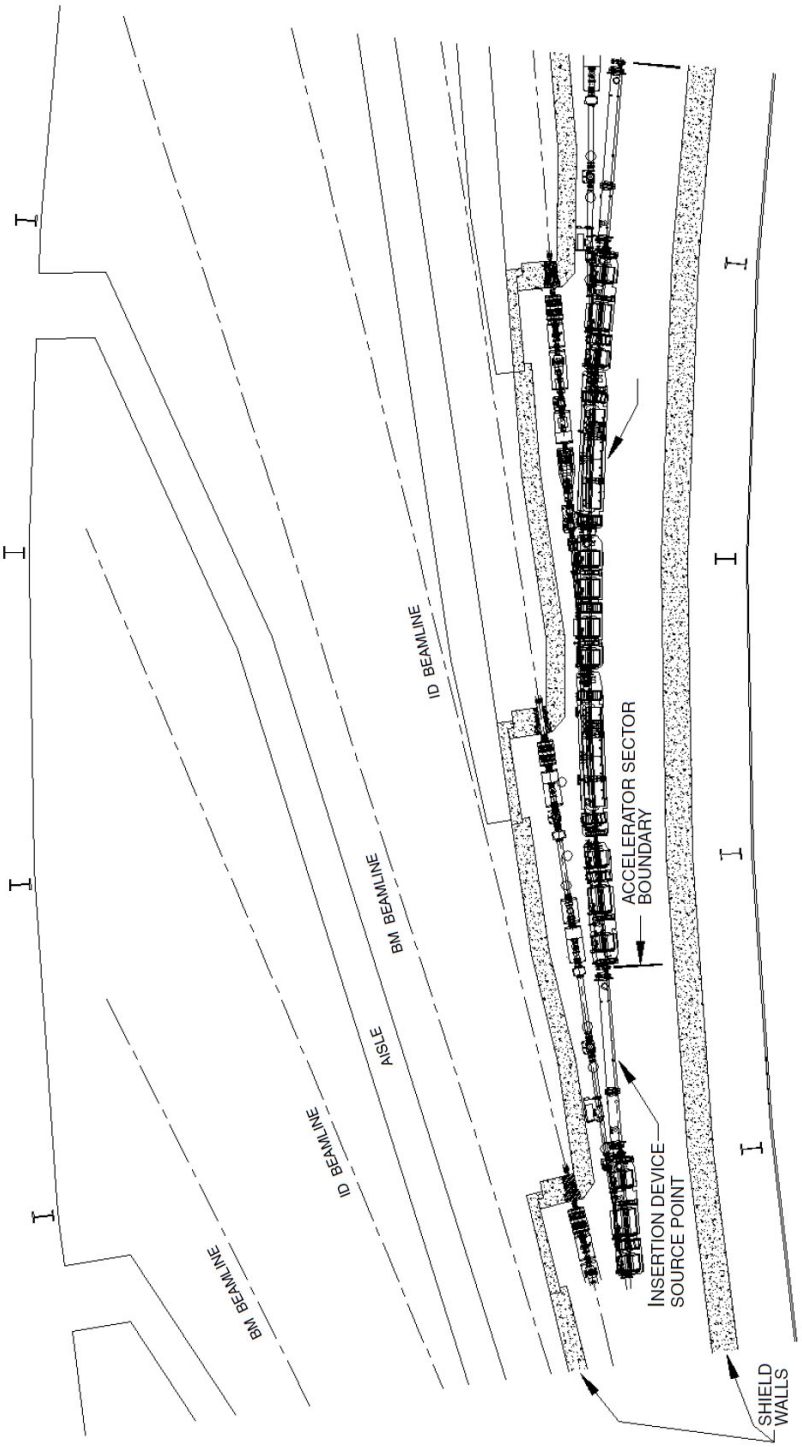

Table 3.11 Nominal Storage Ring Accelerator Operating Parameters

Nominal Energy	7.0	GeV
Operating Current	100	mA
Filling Time (to 100 mA)	< 2	min
Max. Bunch Current	16	mA
Ring Circumference	1104	m
Revolution Period	3.683	µs
Bending Radius	38.96	m
Mean Radius	175.1	m
Number of Sectors	40	
Effective Emittance	3.1	nm-rad
Beam Size at Insertion Straight Symmetry Point		
Horizontal	275	µm rms
Vertical (1.5% coupling)	12	µm rms
Natural Bunch Length	5.3	mm rms
Average Ring Vacuum (@100 mA)	<1	nTorr
Beam Lifetime	7	hours
Momentum Compaction	2.77×10^{-4}	

The source of electrons is the APS injector system, namely the linac, particle accumulator ring (PAR), low energy transport lines, injector synchrotron, and high energy transport line. These systems supply a design performance goal of 6 nC of 7-GeV electrons in a sub-nanosecond pulse at a repetition rate of 2 Hz to the storage ring. These pulses are injected into various storage ring rf buckets, forming different bunch patterns around the circumference. During normal operations, as much as 60 nC of charge is stored in a single bunch, with approximately 20 or more bunches filled, for a total of 370 nC, equivalent to 100 mA of stored beam current. This beam charge is stored with a beam lifetime typically designed to exceed 7 hours, and is periodically replenished from the injector.

3.7.2 Storage Ring Components

3.7.2.1 Storage Ring DC Magnets and Power Supplies

Each of the 40 sectors of the storage ring contains ten quadrupole magnets, seven sextupole magnets, two dipole magnets, and up to eight combined function horizontal/ vertical correction dipole magnets. All magnets except for the dipoles are powered individually by DC-to-DC converters ("choppers"), which in turn are powered by two raw DC power supplies per sector. The dipole magnet main windings are all powered in series by a single power supply. Each dipole also has a trim winding with its own chopper supply. The coils for all of the above magnets are water cooled, with thermal sensors interlocked to the appropriate power supply. One other dipole magnet is located in the tunnel next to the storage ring and is powered in series with all of the ring dipoles. This magnet has a field probe installed and is used to calibrate the ring energy. Nineteen small skew quadrupole magnets with chopper supplies are distributed around the ring for correction of beam vertical/horizontal coupling. These small magnets do not require water cooling. Shown in Table 3.12 are typical parameters for storage ring DC magnets and power supplies.

3.7.2.2 Storage Ring Pulsed Magnets and Power Supplies

Injection into the storage ring requires the use of a total of six pulsed magnets: two septum magnets (thick and thin) and four bumpers. Each septum magnet is designed to momentarily subject the beam extracted from the synchrotron to a vertical magnetic field while leaving the nearby stored beam unaffected. At the point of injection, the two beams are separated by a thin metal partition (the thin septum) carrying a large pulsed current, which produces a large magnetic field on one side only. The thin septum carries a peak current of 3854 A with a pulse width of 333 ms and a voltage of 2 kV, while the thick septum values are 720 A, 10 ms, and 1.4 kV, respectively. The injection thin and thick septa are very similar in design to those used for injector synchrotron extraction.

Table 3.12 Storage Ring Magnet and Power Supply Parameters for 7.0-GeV Operation

Magnet Circuit	Number of Power Supplies	Number of Magnets	Typical Magnet Current I (Amps)	Typical Magnet Strength	Typical Stored Energy/ Magnet (kJ)	Total Stored Energy (kJ)	Max. Voltage Drop/ Magnet (V)	Max. Total Power (kW)
Main Dipole	1	80+1	454	0.599 T	5.3	426	20.5	826
Dipole Trim	80	80	± 54	---	---	---	14.0	60
0.5 m Quadrupoles	240	240	392	18.9 T/m	1.3	158	15.0	1661
0.6 m Quadrupoles	80	80	370	18.2 T/m	1.4	110	18.0	646
0.8 m Quadrupoles	80	80	307	14.9 T/m	1.3	102	22.0	812
Sextupoles	280	280	220	560 T/m	0.6	10	25.0	1400
H/V Corr. Dipoles	318 (H) 318 (V)	318	± 140 ± 136	± 0.146 T ± 0.168 T	--- ---	--- ---	20.0 35.0	890 1526
Skew Quadrupoles	19	19	± 7.7	3.0 T/m	---	---	24	3.8

During the injection process, the beam already circulating in the storage ring must be quickly moved near the thin septum for a single turn to minimize the amplitude of the injected beam betatron oscillation. The oscillation amplitude is proportional to the distance between the stored and injected beams at the point of injection. To accomplish this beam motion, four specially designed fast bumper magnets are used. They are much faster than the septa, with a pulse width of 5 ms. Although the bumpers may require currents as large as 4000 A and have voltages as high as 15 kV, they have less stored energy than the septa due to their required speed. All of the pulsed magnets operate at the same repetition rate as the injector, namely 2 Hz nominal.

3.7.2.3 Storage Ring rf Systems

For stored beam operation in the storage ring, decreases in beam energy resulting from the emission of synchrotron radiation are compensated by rf cavity fields. A total of four sets of four cavities are installed in the ring in Sectors 36, 37, 38, and 40. Associated with the four sets of cavities are four klystron/modulator high power systems, each capable of generating 1 MW of cw rf power. Each klystron is housed in an interlocked enclosure that provides shielding from x-ray radiation produced by the klystron. Opening the enclosure will disable the modulator system and prevent high voltage from being applied to the klystron. These systems are located in Building 420 (rf/extraction) together with the injector synchrotron klystron and modulator system. The transmission of rf power from the klystrons to the cavities is accomplished using rf waveguides which penetrate the storage ring tunnel roof, with one waveguide per cavity. Parameters of the storage ring rf system are given in Table 3.13, and Figure 3.20 shows the layout of the rf power system and waveguides.

Three motorized waveguide switches and a group of motorized phase shifters are provided to allow flexible application of rf power from the klystron systems to the storage ring cavities. The four groups of cavities are organized into two groups of eight and one or the other of two klystrons can be connected to these 8-cavity groups. Additionally, the two associated klystron systems can be combined to allow them to jointly power an 8-cavity group.

Two of the waveguide switches allow one of the storage ring klystron systems to be used in place of the synchrotron klystron system to power the synchrotron cavities. One waveguide switch can be used to switch one of the storage ring klystron systems into a cavity test stand.

Figure 3.21 is a schematic drawing showing the logical relationship of these rf components and their approximate physical locations with respect to Figure 3.20.

All waveguide switches and motorized phase shifters are monitored by a dedicated control system. The access control interlock system (ACIS), which provides personnel safety for the accelerator tunnels and the rf test stand, monitors the position of dual waveguide shutters used for isolation of the rf test stand and the interconnection between the storage ring and synchrotron rf waveguide systems.

Table 3.13 Parameters of the Storage Ring rf System

Harmonic Number	$1296 = 2^4 \times 3^4$	
rf Frequency	351.93	MHz
Peak Voltage per Turn	9.50	MV
Synchrotron Radiation Loss per Turn (no insertion devices)	5.45	MV
Loss per Turn for One Undulator A	38.0	kV
Loss per Turn for One Wiggler A	213.0	kV
Number of Cavities	16	
Max. Voltage/Cavity	1.0	MV
Typical Voltage/Cavity	594	kV
Number of rf Power Sources	4	
Max. Power/rf Power Source	1.0	MW

Figure 3.20 Storage Ring rf Power System and Waveguide Layout

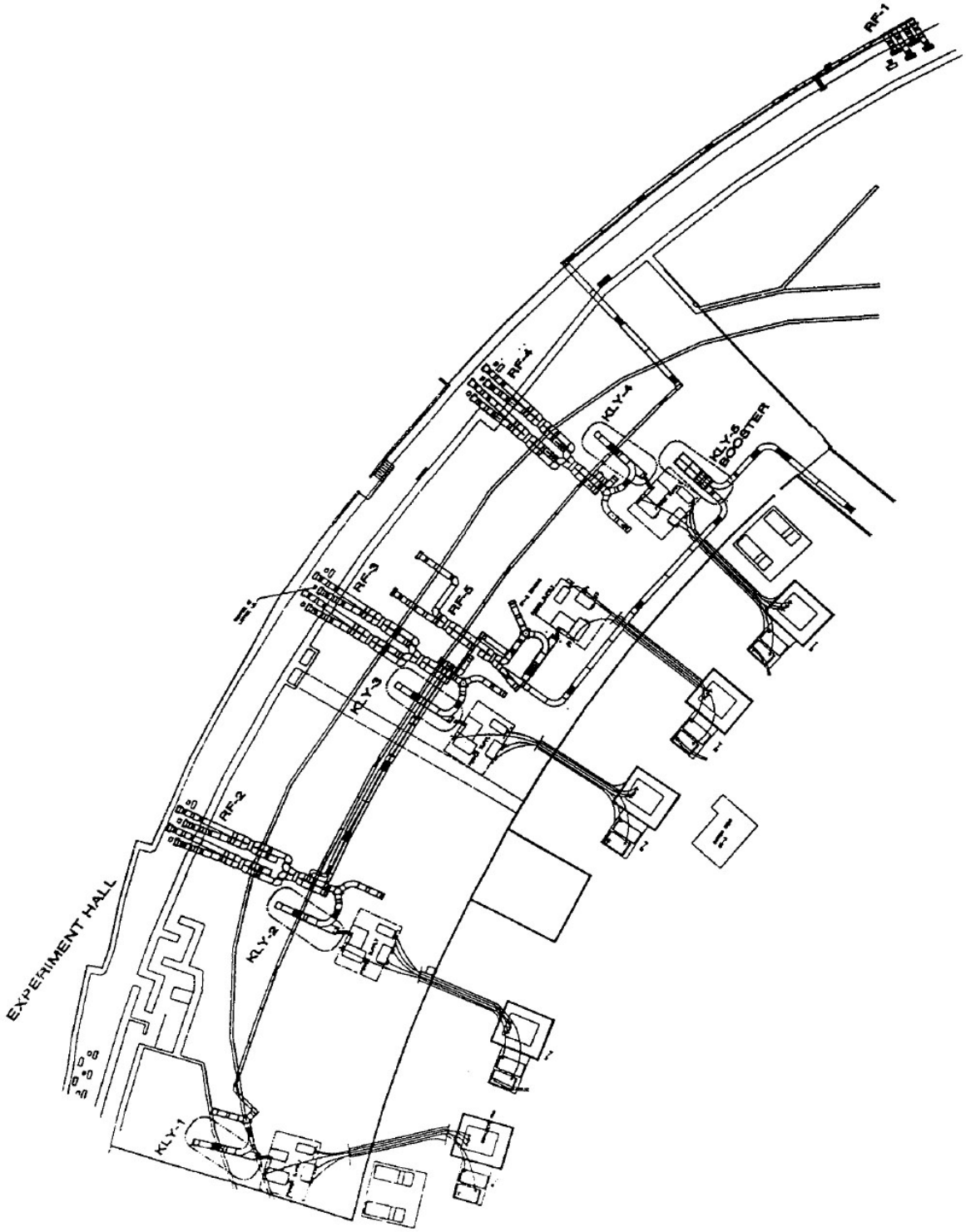

Figure 3.21 Waveguide Switching System Schematic

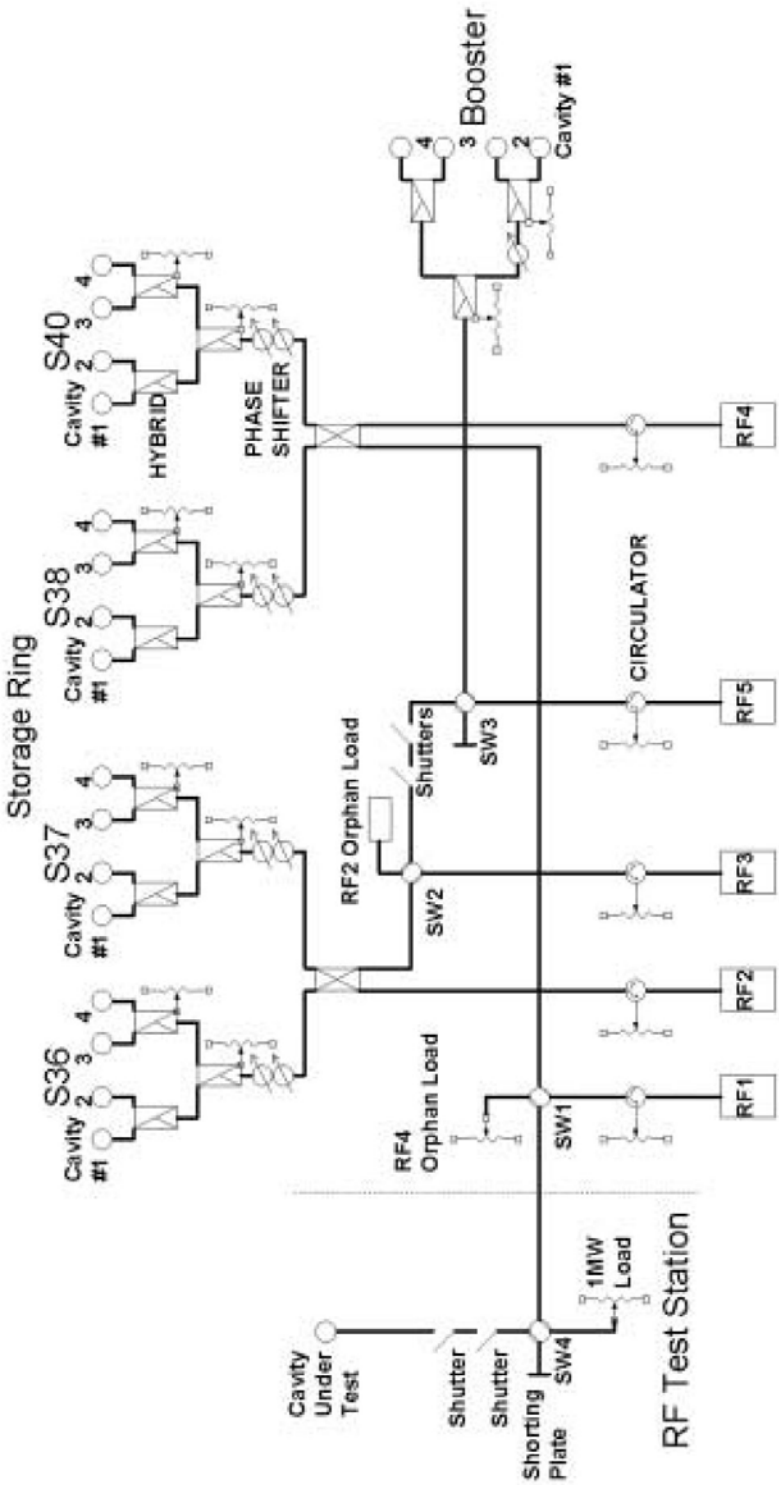

3.7.2.4 Storage Ring Diagnostics

Storage ring beam diagnostics supply the control system with the information required to provide the necessary beam stability, emittance, and intensity for the x-ray users. The types and quantities are listed in Table 3.14.

Examples of locations for beam position monitors and fluorescent screens in Sector 40 and Sector 1 are given in Figure 3.22.

Table 3.14 Storage Ring Beam Diagnostic Systems

Quantity	Component
1	Average (DC) current monitor
1	Integrating current monitor
2	Top-up stored beam monitors
427	RF beam position monitors
104	X-ray beam position monitors
5	Striplines for tune measurement, damping, and bunch charge monitoring
10	Fluorescent screen monitors for injection
5	Scrapers: 3 horizontal, 2 vertical
2	Synchrotron radiation beamlines: one bending magnet; one diagnostics undulator

- Beam Position Monitors: Electron beam position in the storage ring is measured directly by 427 radio-frequency beam position monitors (RFBPMs). The RFBPMs are of two types: Broadband (10 MHz bandwidth), which excel at providing precise time resolution of the beam; and Narrowband (300 Hz bandwidth), which provide precise position information. Both types of RFBPMs utilize four button-type pickup electrodes that extend into the vacuum chamber. x-ray beam position data from 104 x-ray beam position monitors, located at the front-end of each x-ray beamline, provide additional information related to the electron beam position. Information from the beam position monitors is used for both DC and AC closed orbit feedback. The feedback system reduces the effects of equipment vibration and electrical noise on the beam posistion.

Figure 3.22 Beam Diagnostics for the APS Storage Ring in the Injection Region

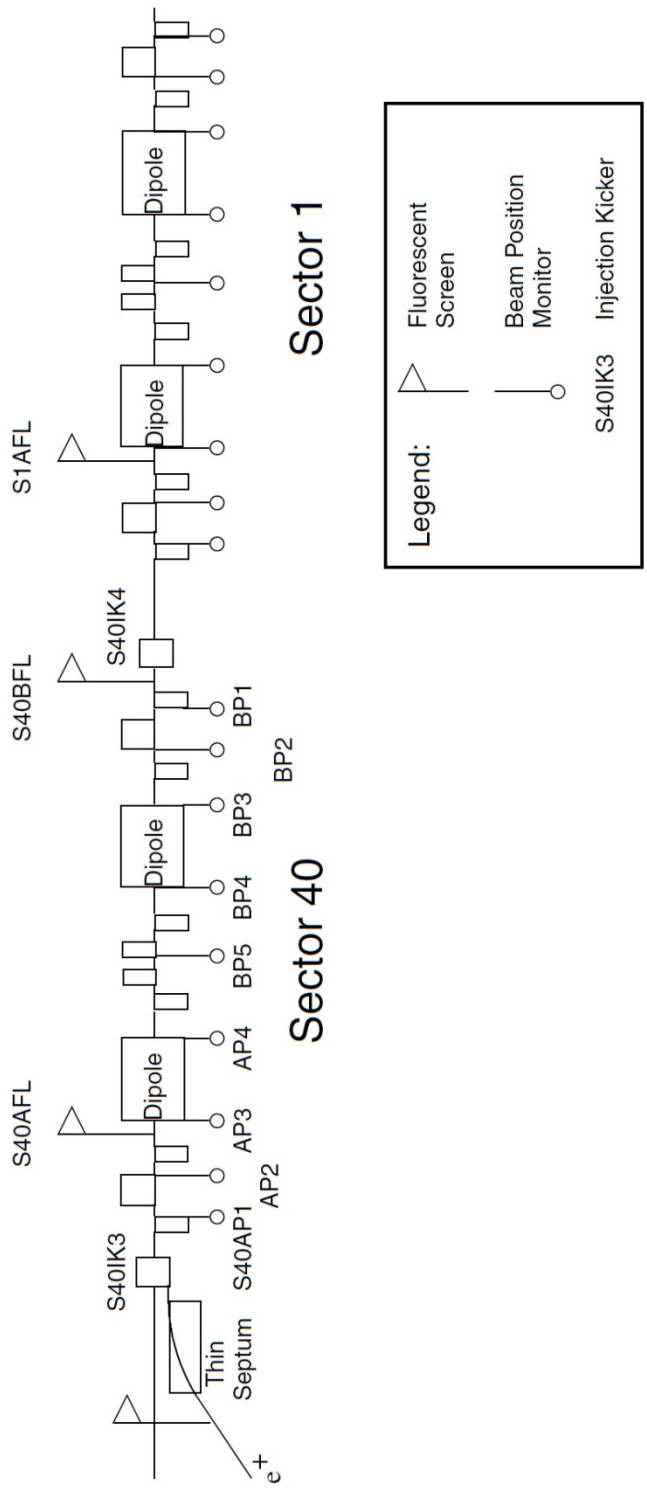

- Scrapers: Five sets of movable, beam-intercepting scrapers are provided to define the horizontal and vertical machine aperture. One horizontal scraper in Sector 37 is used to define localized, controlled beam dump points in the arc. Stepper-motor-controlled drivers are used to accurately position the scraper. An LVDT is used to measure the actual position of the scrapers down to better than 10 μm. Limit switches are installed on the scaper to protect the device from exceeding travel limits.

- Current Monitor: A single DC parametric current transformer (DCCT) is used to measure the average circulating beam current. Two simple rf current-sensitive monitors known as top-up stored beam monitors are also installed in the ring. They are designed to detect the presence or absence of circulating beam, rather than for use in a precise measurement of current. The top-up stored beam monitors are connected to the storage ring Access Control and Interlock System (ACIS). They must both indicate the presence of stored beam before top- up injection can begin. Additionally, an integrating current transformer (ICT) is used for single-bunch measurements.

- Stripline: Stripline pickups and kickers are used to measure the tunes of the beam and to damp fast beam instabilities. Additionally, the output from one pair of striplines is split off and summed to provide signal for a bunch charge monitor. For tune measurement, one stripline is used for very sensitive beam position detection while the other is used to drive the beam. This tune measurement system is similar to that used for the PAR and injector synchrotron. A total of five striplines are installed.

- Fluorescent Screens: A total of ten pneumatically actuated fluorescent screen monitors are used for initial injection steering, beam size measurements, and tune-up of injection performance. These beam-intercepting monitors are similar to those found around the rest of the facility. A video camera senses the 2-D information, and the video is sent to the control room.

- Synchrotron Radiation Monitors: The scope of this document includes transport of synchrotron radiation x-rays into the experiment hall floor in the beam diagnostic beamlines. Two beamlines, comprised of the bending magnet line 35-BM and the insertion device line 35-ID, both located in Sector 35, are used for the purpose of characterizing the stored electron beam. The bending magnet line makes use of both ultraviolet and x-ray wavelength radiation, while the insertion device line uses only x-rays. The hazards associated with the commissioning and operation of other beamlines are fully treated in Chapter 4.

Shown in Figure 3.23 is the floor plan for the 35-BM and 35-ID diagnostics beamlines. The front end of the ID line is identical to the design which is described section 3.9. The BM front end is designed to meet the requirements of the photon diagnostics optics. The components of the BM front end are:

1. All-metal ring isolation valve
2. Bremsstrahlung shield
3. Fixed mask 1
4. Photon shutter 1
5. All-metal slow valve
6. M0 mirror
7. Fixed mask 2
8. X-ray pinholes
9. All-metal fast valve
10. Photon shutter 2
11. Integral safety shutter/collimator
12. Ratchet wall penetration
13. Window

The operational philosophy of the BM front end is the same as the ID front end. The power and power density that are handled by various components in the BM front end are significantly smaller.

The bending magnet line includes two x-ray experimental stations 35-BM-A and 35-BM-C (with the potential of adding stations 35-BM-D) in addition to the UV experimental station 35-BM-B. Ultraviolet light is transported out of the accelerator enclosure via a shielded penetration and a system of mirrors and pipes, arriving in 35-BM-B without line of sight to the accelerator. While no x-ray measurements are performed in 35-BM-B, the well-collimated hard photon beam (white x-rays and bremsstrahlung) will pass through, confined within an evacuated, shielded pipe. The ray-tracing analysis (Figure 3.24) shows how bremsstrahlung photons are vertically collimated and confined within the transport pipe, finally arriving at a bremsstrahlung stop. The shielding and collimators have been similarly designed to confine bremsstrahlung radiation horizontally so that it cannot strike the beampipe inner wall. The insertion device line 35-ID has one x-ray station, 35-ID-A and has a bremsstrahlung beam stop at the end of the beamline. There is also a provision to add another station 35-ID-B.

Figure 3.23 Floor Plan for the 35-BM and 35-ID Diagnostics Beamlines. Beamlines connecting 35-BM-D with 35-BM-C and 35-ID-B with 35-ID-A as well as stations 35-BM-D and 35-ID-B do not exist presently.

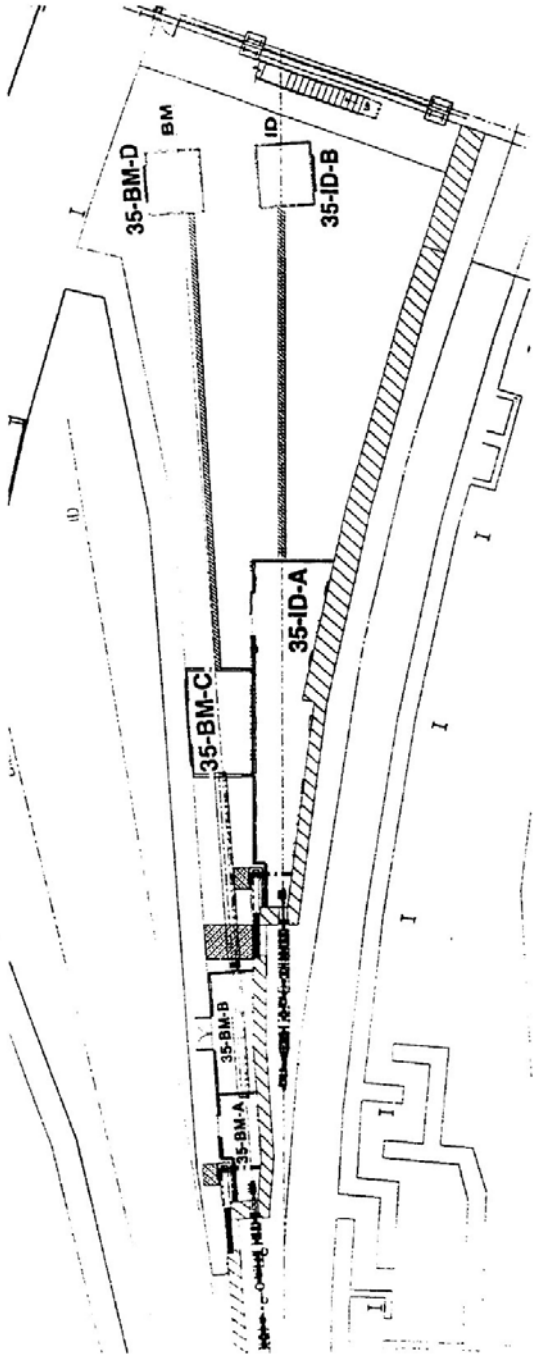

Figure 3.24 Diagnostics Sector BM Beamline Bremsstrahlung Ray-Tracing Analysis (elevation view). The heavy lines indicate lead shielding. Presently, the beam line ends at the backwall of 35-BM-C with the bremsstrahlung stop.

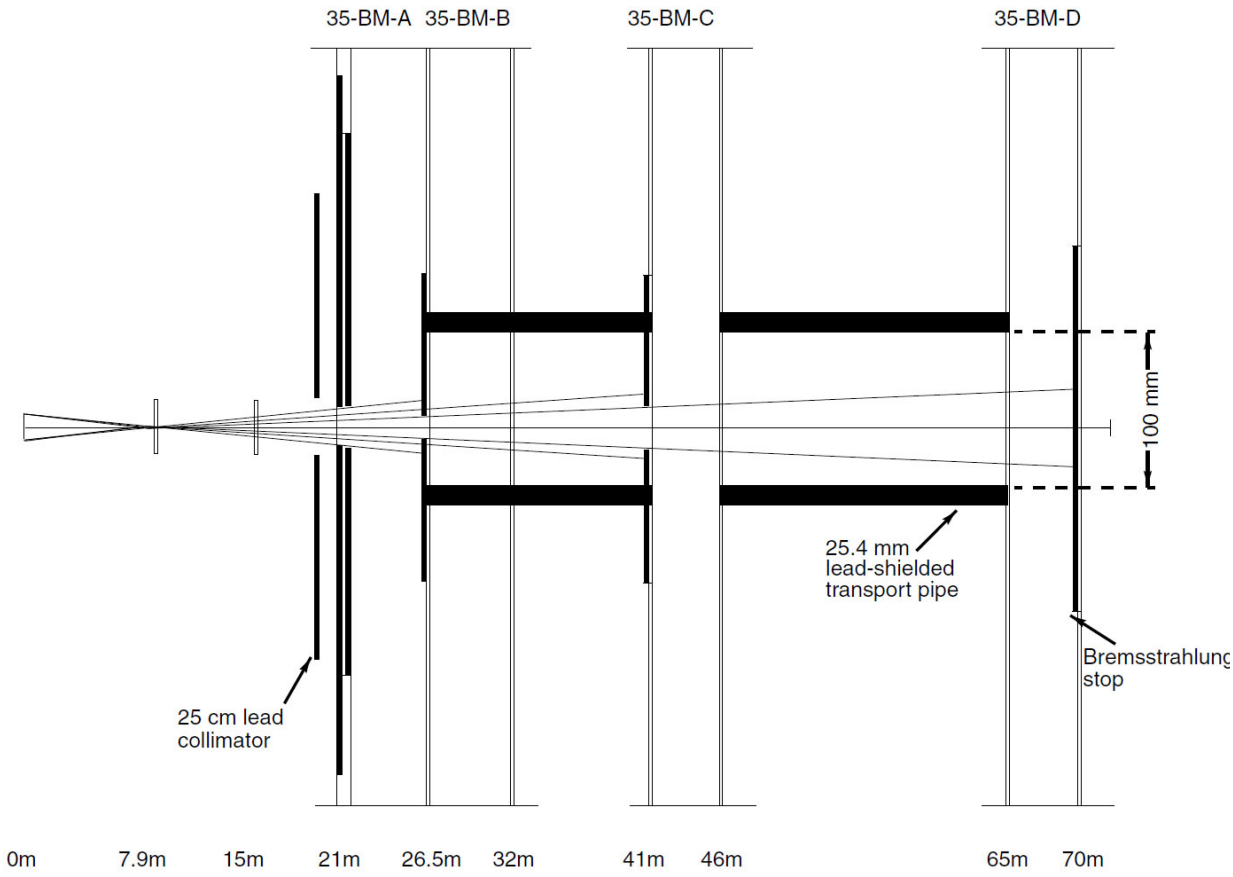

The x-ray experimental stations on 35-ID are shielded using 25 mm (1 in) of lead on the side walls, at least 50 mm (2 in) on the back wall, and 12.7 mm (0.5 in) for the roof. The x-ray experimental stations on 35-BM are shielded using 12.7 mm (0.5 in) on the side walls, at least 50 mm (2 in) on the back wall, and 9.5 mm (0.375 in) for the roof.

3.7.2.5 Storage Ring Vacuum Systems

The storage ring vacuum system consists of the 200 vacuum chambers mounted on girders together with 35 stand-alone chambers located at insertion device straight sections, and various special chambers such as those required for injection. To maintain the ultra-high vacuums needed to yield good beam lifetime, a large number of ion pumps are used together with both distributed and lumped nonevaporable getter (NEG) pumps. A total of 80 gate valves allows maintenance on individual sectors or insertion device straight sections to take place with minimal effect on

nearby vacuum components. Vacuum ion gauges, residual gas analyzers, and the ion pumps themselves are used to monitor vacuum quality. The gate valves, which are actuated with compressed air, are interlocked to close if the nearby vacuum degrades beyond a preset threshold.

The vacuum chambers must be baked periodically at 150° C after maintenance to accelerate outgassing and provide an adequately low base pressure at room temperature. This is accomplished by use of a high temperature water circulation system with a pump/heater station installed in every other sector.

3.7.3 Storage Ring Operating Envelope

The operating envelope for the storage ring in injection mode is the same as that for the synchrotron: 154 W at an energy of 7.7 GeV. This power is a factor of 2 below the safety envelope. In stored beam mode, the operating envelope is stated in terms of the total stored energy in the beam, equal to the product of beam energy and charge. The operating envelope corresponds to a 7-GeV beam with 300 mA of current, equivalent to 7733 J of stored beam energy.

3.8 APS Insertion Device Technical Facilities Description

3.8.1 Introduction

The Advanced Photon Source (APS) is a new generation synchrotron radiation source that provides a large number of insertion device (ID) radiation sources and high quality bending magnet (BM) radiation sources. Of the 40 straight sections in the APS storage ring, 35 are configured for IDs. The remaining five sections are reserved for storage ring hardware. Although the ring incorporates 80 bending magnets (BMs), only 40 of the ones designated as BMs can be used to extract radiation. The accelerator components occlude five of the 40 bending magnet sources, so the maximum number of BM sources on the lattice is 35.

Insertion devices—wigglers and undulators—are devices placed in the straight section of the storage ring that produce intense beams of x-ray radiation. Whenever a charged particle is accelerated, as it is when its direction of travel changes, it emits radiation. In an insertion device, alternating magnetic fields are generated which cause the electron beam to undulate/wiggle back and forth a number of times. Radiation is emitted at each wiggle, and since the emitted radiation is directed along the electron beam, all the radiation from all the wiggles adds up to produce a very intense beam of x-rays. Typical insertion devices are 2.4 m (8.2 ft) in length, but one or more may utilize available space along the storage ring straight section. In a typical insertion device, the magnetic field is vertical and alternates polarity along the device. Since a magnetic field makes charged particles bend in a direction perpendicular to both the magnetic field direction and the trajectory of the particles, the beam wiggles back and forth horizontally (Figure 3.25).

As the magnetic field increases, the amplitude of the electron beam excursions also increases as does the amount of x-ray power. The spectrum of the x-ray radiation—the relative amounts of radiation at each wavelength—also changes. Experimenters are able to change the strength of the magnetic field in their own insertion device to select the spectrum of x-ray wavelengths that they want, while still keeping the total amount of power in their beamlines within manageable limits. In a typical insertion device, the magnetic field is produced by permanent magnets, so that the strength of the magnetic field is changed by changing the vertical separation between the magnet arrays. The closer together the upper and lower arrays get, the higher the magnetic field between them. Future devices will replace the permanent magnets, either partially or completely, with electromagnets or superconducting magnets. In those devices, the strength of the magnetic field is adjusted by changing the current in the magnet coils.

Figure 3.25 Electron Trajectory through Insertion Device

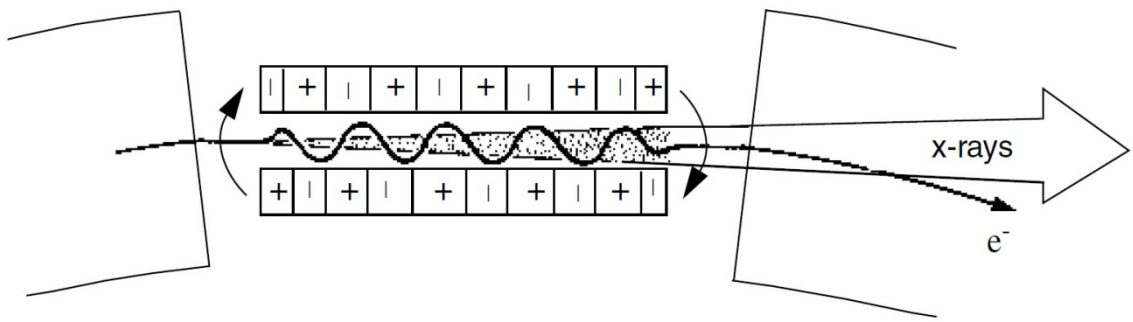

3.8.2 Insertion Device Assembly

The magnetic field of the permanent magnets used in insertion devices is extremely strong. The force between the upper and lower magnetic arrays in some wigglers may approach 7000 kg. The relative position of the two magnetic arrays must be maintained to a high degree of accuracy to ensure the spectral purity of the x-ray radiation and elimination of any adverse effects on the circulating electron beam. Simultaneously, the arrays must be moveable, with high precision, to allow tunability of the x-ray spectrum. Therefore, the support system of the insertion device is massive and the drive system is powerful. Limit switches are provided on the insertion devices that will stop the motors before damage is done. Hard stops are also provided in the insertion device drive system that will stop the motion. An Emergency Stop button, which will immediately stop the movement of the magnet arrays, is provided on the insertion device (ID) itself and at the location of the electronics controls.

The insertion device support structure is separate from that of the insertion device vacuum chamber. The structure is open along one side to permit the insertion device assembly to be moved into place around the vacuum chamber without the need to

disturb the vacuum. The support system for an insertion device includes its own set of wheels, so the device can be pushed by two or three people, or pulled along by a small tow tractor. The ID can be rolled along the inside aisle of the storage ring tunnel from the nearest superdoor to the spot where it is to be installed. A separate mounting base is bolted to the floor using the bolt holes that have already been drilled in the tunnel floor. The ID is rolled over the mounting base, then the wheels are raised and the device is lowered onto the base. The use of a separate mounting base simplifies alignment requirements. The ID needs to be surveyed into place using the position adjustment on the support only during initial installation. If it is being reinstalled, no further position adjustment should be required as long as the position adjustments on the support structure have been left undisturbed. Figure 3.26 shows an ID installed in the storage ring. Most of the electronics that are needed to control the IDs are located in electronics racks on top of the storage ring tunnel. Cables to connect to the ID are run through the penetrations in the tunnel roof.

3.8.3 Insertion Device Vacuum Chamber

The magnetic arrays of the insertion device surround a specially designed storage ring vacuum chamber. There is some similarity between the insertion device vacuum chamber and the primary storage ring vacuum chamber. Both incorporate two chambers connected with a slot; one for vacuum pumping, the other for the circulating electron beam. The outside vertical size of the beam chamber has been kept as small as possible to allow the separation between the magnet arrays to be made small so that the magnetic field can be as large as possible. The wall thickness of the vacuum chamber has also been kept as small as possible; it is only 1 mm (0.04 in) thick in some places, so it is somewhat fragile. Vacuum chambers with vertical beam chamber apertures of 5 mm (0.20), 7.5 mm (0.29 in), 8 mm (0.31 in), and 12 mm (0.47 in) have been designed; chambers with smaller apertures are under development.

The chambers are extruded from 6063-T5 aluminum. The outside surface is machined flat to allow the ID jaws to close to within less than 1 mm (0.04 in) of the chamber. Two nonevaporable getter (NEG) strips run the length of the pumping chamber and provide distributed vacuum pumping. The chamber contains four pairs of beam position monitors (BPMs), a pair above and a pair below the beam, at each end of the chamber.

Figure 3.26 Typical Insertion Device Assembly and Vacuum Chamber

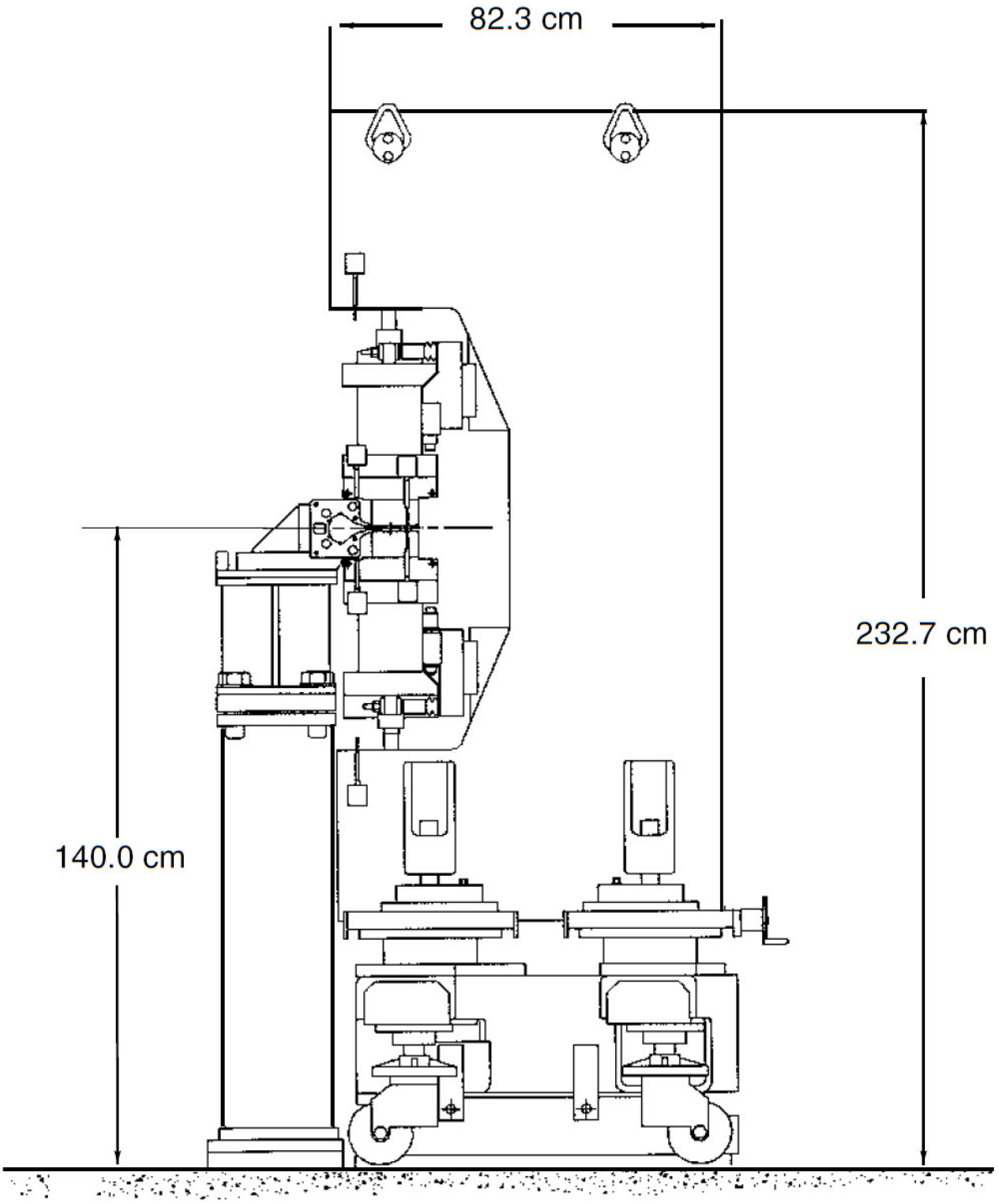

Channels run the length of the ID chamber for deionized cooling water. The cooling water is used to minimize temperature gradients over the length of the chamber. Using a different valve arrangement, the same cooling water connections can be used to bake out the chamber with 150° C deionized water although most bakeouts are performed with resistive heaters.

The existing vacuum chambers are 2.5 m (8.2 ft) and 5 m (16.4 ft) in length with beam apertures of either 12 mm (0.47 in), 8 mm (0.31 in), or 7.5 mm (0.29 in). In addition, two 5-m-long chambers with apertures of 5 mm (0.20 in) have been installed. Special type devices like the EMW require a different type of vacuum chamber. Development of smaller aperture vacuum chambers will continue, and these chambers will be installed as requirements change. Future devices may incorporate the vacuum chamber as part of the insertion device.

Several sectors (canted undulator beamlines) contain a special vacuum chamber and insertion device arrangement that allow x-ray beam from two noncolinear insertion devices in the same section to be steered to two different beamlines through the same front end.

Each standard ID chamber has an upstream and a downstream box welded to the ends. The boxes provide a smooth rf transition, in the form of a copper cone, from the large aperture of the standard storage ring chamber to the smaller ID aperture. Each box also contains a photon absorber, ports for vacuum diagnostics, and pumping ports. In the upstream box the rf transition doubles as the photon absorber. The photon absorbers in both boxes are cooled by deionized water.

The ID chamber is pumped by ion pumps and lumped NEG pumps. The pumps are mounted at each end of the chamber on the end boxes. Two NEG strips inside the chamber provide further pumping. An ion gauge and a residual gas analyzer (RGA) are used to monitor the pressure. The ID vacuum chambers must meet the same vacuum criteria as the standard storage ring chambers. After the chamber has been baked out and leak tested, the working vacuum is below 2×10^{-10} Torr. During beam operations, photon-induced gas desorption is expected to raise the pressure by one decade.

The ID vacuum chamber, pumps, and end boxes are supported by steel pedestals (see Figure 3.27). The pedestals also provide adjustment capabilities for aligning the vacuum chamber. There are three pedestals supporting the ID chamber, regardless of the chamber length.

Figure 3.27 Insertion Device Vacuum Chamber with Supports

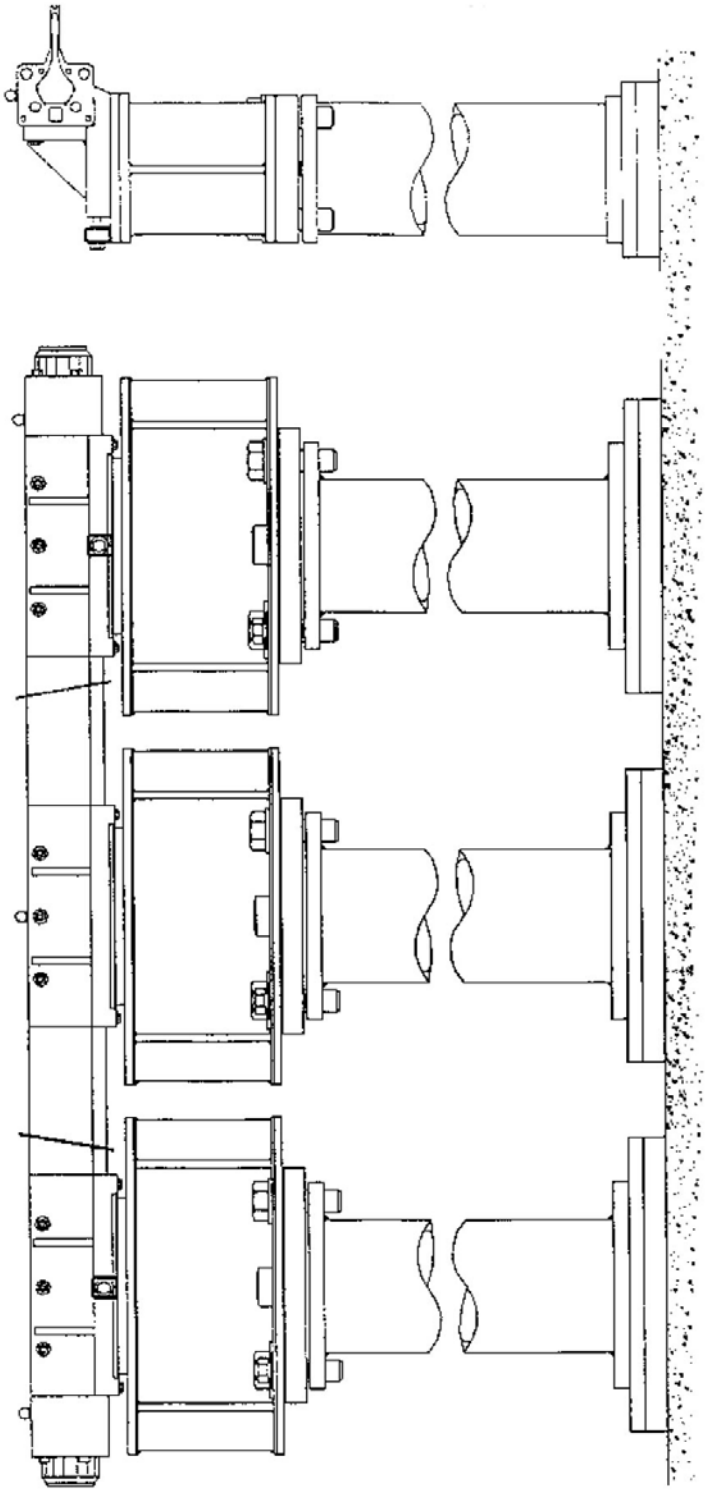

3.9 Beamline Description

There are potentially 70 locations around the storage ring that x-rays can be extracted, 35 insertion device (ID) straight sections and 35 bending magnet (BM) sources. To turn one of the straight sections into a source, the APS installs an insertion device. The type of ID is determined by the spectral requirements of the beamlines experimental program. An instrumented beamline has a front end that provides for controlled transport of the x-ray beam from the storage ring to the experiment hall. Outside the storage ring tunnel a beamline will condition and control the delivery of the x-ray beam to the experiment.

3.9.1 Front End

Most of an APS front end is housed within the concrete shielding of the storage ring tunnel. A small portion of the front end extends outside the tunnel, into the experiment hall, and provides the interface to the beamline. Access to the tunnel for work on the front end is via sliding doors in the tunnel wall (ratchet wall doors).

Several types of APS front ends have been installed at the APS; a typical design is detailed elsewhere (Kuzay 1993). Each front end includes the following components:

- Fixed Masks – water cooled apertures that limit the potential excursion of missteered synchrotron beam, protecting downstream optics and shielding
- Photon shutters – remotely actuated devices that open to transmit the synchrotron beam and close to stop the beam.
- Bremsstrahlung collimators – heavy metal apertures that limit the spatial extent of bremsstrahlung radiation resulting from interactions of the electron beam and residual gases and solids in the storage ring.
- Safety (bremsstrahlung) shutters – remotely actuated devices that open to transmit the synchrotron beam and close to stop any bremsstrahlung radiation. To ensure reliable safe operations, two safety shutters are installed in each front end.

Bremsstrahlung collimators and safety shutters are protected from the synchrotron beam by fixed masks and photon shutters.

3.9.2 Beamline

At each instrumented port, a beamline is installed to deliver the x-ray beam to the experiment. A beamline consists of x-ray optics (e.g., monochromators, mirrors, and slits/apertures, data acquisition systems, utility distributions, experiment equipment/infrastructure, and radiation shielding (e.g., masks, collimators, shutters) all configured to meet the unique programmatic requirement of the beamline users.

3.10 Conventional Facilities

3.10.1 Introduction

Since the purpose of this document is to address the accelerator system, only a brief description of the conventional facilities housing other accelerator components is included. APS accelerator and experiment beamlines are housed in conventional facilities of standard structural steel framing, poured concrete floor slabs, and an architectural metal exterior curtain wall. The injector facility and storage ring are located in radiation shielded enclosures.

The conventional facilities comprise multiple buildings. The predominant structure is the experiment hall building, which houses the storage ring enclosure and provides space for the experiment beamlines and related equipment. Laboratories and offices for experimenters' use are located adjacent to and along the outer perimeter of the experiment hall. The accelerator system consists of the linac, particle accumulator ring, injector synchrotron, and storage ring. The linac building is located in the storage ring infield, separate from, but connected to, the other conventional facilities. Administrative support for the entire facility is housed in an adjacent multipurpose office/laboratory building, the CLO.

3.10.2 Conventional Facility Design Considerations

Design criteria for the facilities took into account the following:

- Technical components dictate the scale, geometry, and relationship of the conventional facilities, with the 1104-m-circumference (3621-ft) storage ring the primary element in organizing the conventional facilities. Optimum use of the stored beam by researchers requires the flexibility for photon beams to exit at tangents to the storage ring enclosure approximately every 4.5 degrees. These beamlines range up to 73 m (239 ft) long. This need for flexibility in the placement of photon beams also dictated the location of the linac in the infield of the storage ring.

- Safety of personnel during facility operations requires that the storage ring, PAR, synchrotron, and linear accelerator be shielded to comply with ALARA (as low as reasonably achievable) guidelines as specified by DOE and Argonne.

- Reliable operation of the technical components requires installations on a structure which provides vibration control and containment in a controlled, stable environment. Seismic and wind load parameters specified by DOE Order 6430.1A (DOE 1989) and the Uniform Building Code were applied in the design of the facility.

3.10.3 Conventional Facility Description

Site Work: The site work was designed to provide integral support to the development and operation of the APS. The site work included underground utility installation and topographic grading to accommodate surface storm water management, access roads, and parking lots. Additionally, landscaping was designed to provide minimum-maintenance ground cover in conjunction with shrubs and trees throughout the project site to enhance the visual panorama. The underground utilities are extensions of existing systems. The site grading necessary for storm water management included modifying the existing ground contours and construction of storm water detention basins.

Injector Facilities (Buildings 411, 412, 413, 415): The injector facilities are a series of buildings located in the infield region of the experiment hall building. These buildings are the linac wing, including the concrete tunnel for the linac itself and the associated klystron gallery; the injection wing, including the particle accumulator ring (PAR) enclosure; the Linac Earea Area (LEA) enclosure; the synchrotron enclosure; and the rf/extraction building. The basic structures are defined by the dimensional and functional requirements of the accelerators. The final dimensions have been determined by actual equipment size and placement. The building designs are purely functional, and amenities are minimal. Air conditioning is provided only in areas where temperature control is essential, such as the LEA enclosure, a small electronics interfacing and control room, and in the few laboratory workrooms in the injection wing. A covered walkway running above the synchrotron enclosure connects the injection wing to the rf/extraction building. This walkway carries computer network and control signals, communication wiring, and personnel traffic between the two buildings. The same walkway is used to house waveguides carrying rf power to the cavities of the synchrotron enclosure from the rf/extraction building.

rf/Extraction Building (Building 420): The rf/extraction building is located in the infield and is connected to the experiment hall building. The building houses the four rf klystrons for the storage ring and the klystron for the synchrotron. The building contains several related functional rooms, such as electronics, magnets, and toilet facilities. There is also a truck air lock to receive and ship material and equipment to and from the area. The building has conditioned air where it is required to support the functions of the building.

The rf/extraction building is a structural steel framed building with an insulated metal siding skin attached to the steel frame. The roof is composed of a structural steel frame with a metal roof deck attached. A single-ply membrane roofing is applied over a layer of rigid roofing insulation. The floor is cast-in-place reinforced concrete over compacted earth fill. The roof of the synchrotron and storage ring that is exposed as a floor slab in the rf/extraction building is composed of 1 m (39 in) of cast-in-place reinforced concrete.

The walls, roof, and floor of the synchrotron are cast-in-place reinforced concrete that vary from 30 cm (12 in) to 1 m (39 in) with earth berms over the walls and roof for radiation shielding.

Experiment Hall/Storage Ring (Building 400): The experiment hall housing the electron beam storage ring also includes a 13-bay sector designated as the Experiment Assembly Area (EAA). The EAA was used for assembly and testing of storage ring accelerator components and is now used to house technical system support functions. The hall also houses air conditioning and process water distribution equipment located on enclosed mezzanines over the perimeter aisle of the hall and at the two ends of the EAA. Conditioned air is supplied to all areas of the hall and storage ring. Air distribution ducts, mixing boxes, and diffusers along with hot, chilled, process, and domestic water piping systems are suspended from the roof beams of the experiment hall and EAA.

The experiment hall building is a steel-framed building, annular in shape, with an insulated metal siding skin attached to the steel frame. There are five truck access doors spaced around the infield of the building and nine truck air locks associated with the laboratory-office modules (LOMs) and control center that surround the building. The roof of the building consists of a perforated metal deck covered with sound-absorbing fiber bats, a single-ply rubber membrane and mortar-faced rigid insulation boards. The floor of the hall is a monolithic cast-in-place reinforced concrete slab on grade tied to the storage ring slab on grade by shear- and moment-resisting steel dowels. The hall and storage ring slab on grade are isolated from the perimeter aisle and the EAA slab on grade by expansion joints that limit transmission of vibrations to the storage ring and photon beamlines.

The storage ring is a reinforced concrete box structure with expansion joints in the walls and roof approximately 109.7 m (360 ft) apart. For radiation protection, the outer (ratchet) wall of the box is formed with high-density concrete 0.56 m (22 in) thick, and the infield wall of the box is formed with standard weight concrete 0.8 m (32 in) thick. The roof of the box is formed with standard weight concrete 1 m (39 in) thick. The ratchet wall has access door openings adjacent to each beamline penetration of the ratchet wall. Ratchet wall access doors are lead-filled, steel-faced panels suspended on rollers carried by steel rails bolted to the concrete door opening. Doors are opened by manually operated winches.

Power supplies, switchgear, and control cabinets are bolted to the top of the storage ring box structure for ease of access and maintenance. Cables between this equipment and the technical components inside the storage ring enter the ring through multi-curved conduits embedded in the roof. Penetrations in the wall of the ring below the ceiling level on the infield side of the ring are used for supply and return process cooling water piping and conditioned air ductwork. They are also used for entry of smoke detector sampling pipes, fire sprinkler piping, and conduit for telephones, public address, 480-, 240-, and 120-volt power outlets, and lighting circuits. Signs inside the storage ring and experiment hall direct occupants to all

exits and to wall-mounted telephones situated on the inside wall of the storage ring, and periodically on those building columns forming the perimeter aisle of the hall. Fire extinguishers are also found at these locations in the hall.

Utility Building (Building 450): The utility building is a one-floor, high-bay, rectangular building located northeast of the experiment hall building and is the principal source of utilities for the facility. The structure is located a sufficient distance from the main facility to minimize vibration transfer. Utility lines run underground between the utility building and the control center. The utility building provides the following to the APS:

- Chilled water
- Deionized water for cooling technical equipment
- Hot water for heating
- Compressed air for general services
- Electric power

APS Controlled Activities/Operations Conducted Outside of the 400 Area: These take place in various buildings in the 300 area of Argonne, see Table 1.1 for a list of such buildings. These buildings are 1960s and 1970s vintage structures that vary from Prefabricated Hi-Bay Buildings, multi-story steel framed buildings, to underground concrete tunnels. They are suitable for basic storage and some component fabrication and assembly work and are fitted with the basic life safety systems.

Emergency Power Systems: The power for emergency use is derived from three diesel generators. Emergency power provides energy for emergency lighting, alarms and communications, sump pumps, elevators, and designated technical equipment. This emergency power equipment, located in the utility building and at two locations within the infield of the experiment hall, is maintained, operated, and tested in accordance with the requirements of NFPA 110 (NFPA 1993) by the Argonne Plant Facilities and Services Division, which is also responsible for the electrical engineering load analysis of any additions to the emergency power system.

Normal power for each of the three generators is supplied from individual 480-volt substations. Upon failure of normal service, the emergency load is automatically transferred to the emergency generators. The electric service is considered to have failed when any phase drops below 70% of normal voltage for one second or longer. A delay of up to 10 seconds may occur before the generator picks up full emergency load. Service is considered back to normal when voltage on each phase reaches 90% of its rating. When normal power is restored, the load is manually transferred to its normal source. For cool-down purposes, the generators will continue to operate for a period of time after being unloaded.

A centralized UPS system, consisting of five 40-kW, 3 phase, 208/120-V UPSs is distributed on top of the storage ring to provide uninterruptible power to critical technical equipment. Each UPS is capable of riding through a 15-minute power outage without disrupting power to the loads. Each UPS is fed from the emergency power system, which requires them to only ride through a 10-second loss of power, the amount of time it takes the emergency generator to start and come on-line.

3.10.4 Building Access and Egress

Access to the linac is via the vehicle tunnel under the storage ring, or from the CLO via the Experiment Assembly Area (EAA) and the connecting corridor.

Access to the LEA enclosure, Building 413, is via the vehicle tunnel under the storage ring. This building has two entry points, one at each end of the enclosure, but is not accessible from any other infield building.

The synchrotron enclosure, Building 415, is the ring-shaped tunnel connecting the linac injection building to the storage ring of the experiment hall. Access and egress to and from the synchrotron is through the injection room or the storage ring in the experiment hall.

The rf/extraction building is accessible from the infield through the truck air lock and also through the injection wing into the connecting corridor, which exits directly into the rf/extraction building. It is also accessible from the experiment hall into the storage ring, up a flight of stairs, to the top of the storage ring, through several doors at various locations into the rf/extraction building.

The storage ring is accessible from the synchrotron, the experiment hall, and the EAA via the ratchet door, and from the inner circle through the super doors. The experiment hall and EAA are accessible from the LOMs, the CLO, the rf/extraction building, the connecting corridor, the inner circle by way of the super doors and over the storage ring, and from the outer wall doors.

The APS occupancy type for the linac area is classified as “Special Purpose Industrial Occupancy” per Chapter 28 of NFPA 101 and complies with the NFPA 101 Life Safety Code (NFPA 1991). The design satisfies all requirements of the standards to make the facility accessible to and usable by the physically disabled. All accessible routes in the facility which serve as a means of egress are accessible to and usable by physically disabled individuals. The number of exits from the facility exceeds the required minimum, based on calculated occupant load.

3.10.5 Security Protection

Security for the APS is provided by the same security force providing protection to Argonne National Laboratory. Access to the Argonne site is through controlled entry at manned gates and via a visitors’ reception center where visitors sign in and

obtain gate passes. The site-wide alarm communications and appraisal system links the APS to the central alarm station. Security of the physical plant is provided by patrol and observation 24 hours per day, 7 days per week.

To provide additional local security and to prevent unauthorized personnel from entering the experiment hall, the LOMs, the injector buildings in the infield, or the central office building (during evenings and weekends), a card-based access system is provided. This system has been programmed to allow open entry during the day and programmed to open on an individual basis after hours. All doors not so equipped are locked during evenings and on weekends and holidays.

3.11 Engineered Safety Systems

3.11.1 Access Control and Interlock System

In this section all references to the Linac Extension Area (LEA) refer to the LEA's enclosure, and the terms "synchrotron" and "booster" are used interchangeably.

3.11.1.1 Introduction

The APS Access Control and Interlock System (ACIS) is the engineered safety system for integrating access control and monitoring devices for the accelerator systems. The ACIS provides protection by ensuring that no one may occupy or enter an area where prompt radiation may be present. The system also inhibits beam generation when established radiation limits are exceeded or improper access is gained. An independent design review of the interlock system was held in November, 1992 (ANL 1992a). A detailed review of the actual interim linac version of the ACIS was conducted in June, 1993. A detailed review of the actual linac/PAR version of the ACIS was conducted in February, 1994. A detailed review of the actual synchrotron version of the ACIS was conducted in March, 1994, and a technical review of the storage ring ACIS in December 1994. In July, 2015, the upgraded LEA ACIS utilizing a safety certified PLC was throughly reviewed by safety system experts from five other labs before installation.

In addition to the above technical reviews, a reliability study of the linac/PAR ACIS was conducted by Argonne's Reactor Analysis Division (February 1995) and a software review of the rf area's (storage ring Zone F) ACIS was conducted by Rockwell Automation/Allen-Bradley November 1995.

The policy and design concepts and operating characteristics for the ACIS as it pertains to the operation of the linac, PAR, synchrotron, LEA, and storage ring are presented in this section.

Five implementations of the ACIS are described in this document, one for the combined linac/PAR system, known as the Linac/PAR ACIS, containing a common controlled area plus the Injector Test Stand (ITS) adjacent to the gun area of the

linac, one for the booster synchrotron (the synchrotron ACIS), one for the LEA (the LEA ACIS), one for the rf systems in building 420 and Zone F of the storage ring (the RF Area ACIS), and the storage ring ACIS covering the remaining five zones (A-E) of the storage ring.

Design attributes of these implementations are described in the sections below, followed by Table 3.15 summarizing the device counts and equipment locations for all ACISs.

3.11.1.2 Area Classification

Two general area classifications have been identified: (A) Controlled Areas and (B) Noncontrolled Areas. A Controlled Area is any area to which access is controlled in order to protect individuals from exposure to radiation and radioactive material. Buildings 411, 412, 413, 415, and 420 (linac building, synchrotron injection building, LEA enclosure, synchrotron enclosure, and rf/extraction building, respectively) are considered Controlled Areas.

Within Controlled Areas, there may exist Radiation Areas, which are areas where an individual can receive a dose equivalent greater than 50 ∝Sv (5 mrem) in one hour at 30 cm from the radiation source or any surface through which radiation penetrates. The DOE guidelines (DOE 1994a) define three categories of radiation areas: very high radiation areas, high radiation areas, and radiation areas. The APS facility categorizes these radiation areas into three classes:

Class I - Very High Radiation Areas (> 5 Gy/h): Areas where a person, if able to enter, is liable to receive 5 Gy (500 rad) or greater in 1 hour at 100 cm from a radiation source or from any surface through which radiation penetrates.

Class II - High Radiation Areas (> 1 mSv/h and δ5 Gy/h): Areas within a controlled area where an individual can receive a dose equivalent greater than 1 mSv (100 mrem) in 1 hour at 30 cm but less than 5 Gy (500 rad) in 1 hour at 100 cm from the radiation source or from any surface through which radiation penetrates.

Class III - Radiation Areas (> 50 ∝Sv/h and δ1 mSv/h): Areas within a controlled area where an individual can receive a dose equivalent greater than 50 ∝Sv (5 mrem) but less than 1 mSv (100 mrem) in 1 hour at 30 cm from the radiation source or from any surface through which radiation penetrates.

The areas within the linac, PAR, LEA, synchrotron, and storage ring shielded enclosures (sometimes referred to as tunnels in this document) are, during operation, Class I (very high radiation areas), and are posted in compliance with DOE/EH 256T (DOE 1992a). Under normal operating conditions, the highest calculated radiation level in the areas outside of the shielded enclosures is below that of a Class III Area (Radiation Area). Therefore, these areas are classified as Controlled Areas. Access

to the klystron gallery area of the linac building will also be controlled for administrative reasons.

The areas within the shielded enclosures are provided with the engineered safety systems described in the following sections. When the linac, PAR, LEA, synchrotron, or storage ring are not operating, and after any needed radiation surveys are performed, these areas revert to controlled areas. Access to the klystron gallery is not controlled by the engineered safety system.

3.11.1.3 Access Control and Interlock System (ACIS) Description

The APS ACIS provides protection by ensuring that no one can occupy or enter a high radiation area where prompt radiation is present or potentially present. The system is designed to turn off the source of radiation when there is a possibility of someone being exposed.

The APS facility is designed to allow the major systems, i.e., linac/PAR, injector synchrotron, LEA, and storage ring, to run independently of one another under specific conditions. This is accomplished by the partitioning of areas with concrete shielding, beam stops and other safeguards. Five complete and independent ACIS implementations, one for the linac-PAR tunnel area, one for the synchrotron tunnel area, one for the LEA tunnel area, one for the rf area of the storage ring (zone-F), and one for the remainder of the storage ring (zones A through E) are provided. Except for the equipment controlled by the ACIS to disable the production of prompt radiation, the number of maze-entry doors, and the number of beam shutdown stations provided for each implementation, the designs are nearly identical. Any differences are described in the following sections.

3.11.1.3.1 Design Conformance to Available Documents

The ACIS is designed to comply with the following:

- DOE Order O 420.2A, “Safety of Accelerator Facilities” (DOE 2001a).
- “APS Preliminary Safety Analysis Report” (ANL 1990).
- SLAC 327, “Health Physics Manual of Good Practices for Accelerator Facilities” (SLAC 1988).
- NBS Handbook 107, “Radiological Safety in the Design and Operation of Particle Accelerators,” ANSI N43.1 (NBS 1979).
- NCRP Report No. 88, “Radiation Alarms and Access Control Systems” (NCRP 1986).

“ACIS Design Compliance with Principal Accelerator Safety Interlock Design Requirements,” ANL/APS/LS-308, lists all pertinent sections of the DOE order,

SLAC 327, and NBS Handbook 107, and describes the ACIS features which satisfied those sections, when it was originally built. Since that time, changes on the DOE order and operationally prompted changes have resulted in many minor changes to the ACIS. All such changes are reviewed and approved by the APS Radiation Safety Policy and Procedures Committee and are reflected in the latest revision of this SAD.

Among the more important aspects of conformance, the ACIS satisfies the following requirements:

1. Fail-safe design, so common failures leave the linac, PAR, synchrotron, LEA, and storage ring in a safe, beam-inhibited state.

2. Redundant protection, so no single component or subsystem failure renders the accelerator or storage ring systems unsafe, that is, in a beam-permissive state in violation of the ACIS logic.

3. Provisions for testing, so that proper component and system functions may periodically be completely verified, as well as demonstrating “end to end” responses for all critical functions.

4. Lockout, preventing access to the tunnel area when prompt radiation is potentially present.

3.11.1.3.1.1 Detailed ACIS Description

The ACIS implementations are designed to allow linac, PAR, synchrotron, LEA, rf Area, or storage ring operation only after specific conditions are satisfied; i.e., the involved tunnel area is searched, access doors are closed and locked, all controlled access keys are in place, any required beam stops are in place, all radiation monitors are reading below alarm levels, and the proper control keys are used to select an operating mode. Conversely, operation is tripped and/or inhibited by the opening of any access door, the actuation of any beam shutdown button, the improper position of a needed beam stop, any radiation monitor reading above an alarm level, or a control key removed from its control panel. The removal of a controlled access key after a beam permit state is reached will sound an alarm in the APS control room.

The ACIS incorporates the following equipment:

- Programmable Logic Controllers (PLCs) installed in each chain to perform the system’s decision logic (original ACIS).

- Safety certified Programmable Logic Controller to perform the system’s decision logic (updated ACIS).

- PLC input/output (I/O) modules that interface the PLCs with the switches, lights, locks, relays, and other devices used by the ACIS. Safety certified I/O modules used for all safety functions in the update ACIS.
- Uninterruptible power supplies (UPSs), some centralized and some dedicated to ACIS equipment, to protect against short-term AC power loss.
- Control panels and status displays.
- Maze door hardware (status switches, magnetic locks, emergency exit crash bars, emergency entry buttons, and status message displays).
- Ratchet and super door status switches, augmented with administrative Kirk-key-type locks.
- Controlled access key banks.
- Beam shutdown stations (BSSs) installed in the linac/PAR, LEA, synchrotron, and storage ring tunnels and outside the maze doors of these tunnel areas.
- Beam stop mechanism installed in the low energy transport (LET) beamlines between the PAR and the synchrotron (PtB), a triple-block beam stop installed between the PAR and the synchrotron.
- Radiation stop mechanisms installed in the booster bypass beamline between the synchrotron tunnel and the LEA tunnel (BTL) and between the linac and the LEA (LTL).
- Radiation stop mechanisms installed in the high energy transport (HET) beamline between the synchrotron and storage ring.
- Interlocked beam current transformer systems which measure linac-accelerated beams.
- Interlocked beam current detectors which monitor stored beam current.
- Interlocked RG2 α magnet current monitors to disable guns while RG2 α magnet is ramping during Interleaving mode.
- Visible and audible warning indicators.
- Radiation monitors to sense gamma and neutron radiation levels located in the klystron gallery and outside the PAR, synchrotron, LEA, and storage ring tunnel areas.
- Interfaces to the linac’s electron gun and klystron systems and to the PAR, synchrotron, and storage ring main dipole power supplies and rf systems.

- Interfaces to the rf waveguide shutters in the rf building.
- Interfaces to the booster bypass beamline vertical-bend magnet and the horizontal switch magnet, which is the magnet used to transport beam to the LEA.
- Interface to alpha magnet current levels
- Interface to gate valve position statuses
- Equipment racks, conduit, cable trays, and cables (multiconductor and fiber optic).

The theory and operation of the PLC methodology and its application to the ACIS is described in this section under PLC Methodology and ACIS Application.

All ACIS circuits and subsystems are designed to be fail-safe. That is, failures due to loss of a power supply, loss of a UPS, disconnected interface connectors, open field component wiring, open relay coils or contacts (either in the ACIS or the affected controlled-equipment), open communication wiring, missing controlled-equipment connectors, missing I/O modules, or halted PLC program execution, will cause the controlled linac/PAR, synchrotron or storage ring systems to be disabled and a beam shutdown to occur. The ACIS is not fault-tolerant in that it will not continue to enable equipment operation in the presence of faults.

3.11.1.3.1.1.1 Original ACIS Description

The APS Access Control Interlock System (ACIS) for the linac, PAR, synchrotron, rf Area, and storage ring employs two electrically independent interlock chains/channels in each implementation, referred to below as Chain A and Chain B, providing system-wide redundancy. Well-defined status indicators provide system information to operating staff. In no case is the independence of the two interlock chains/channels compromised.

The original ACIS design methodology, general system design, component choices, and the proposed operational and testing procedures, were reviewed by a technical design review panel in 1992 (ANL 1992a). All of the material, related to the original ACIS, in section 3.11.1of this document was presented as a design concept to the review panel. A summary of the panel's report follows:

> "It is the opinion of the review committee that the design meets the needs of the APS Project, given the safeguards and redundancy that have been incorporated into the design. Based on the presentations made by the APS staff, the committee has confidence that the general approach using dual Programmable Logic Controllers (PLC) is appropriate and that the development work as presented, is thorough and competent."

A detailed technical review was held in June, 1993 to evaluate an actual implementation of the interim linac ACIS system prior to the start of linac commissioning. Several improvements, including the recommendations of this review panel, were subsequently implemented in the interim linac ACIS and further promulgated in the linac/PAR, synchrotron, LEA, rf area, and storage ring implementations. A summary of this second review panel's report follows:

> "In summary, the committee concludes that design and implementation of the APS Access Control Interlock System using Programmable Logic Controllers is entirely appropriate for this application. We believe that the linac interlock system as demonstrated, will provide a safe and reliable means for control of radiation hazards and for permitting safe access. We further conclude that the system meets or exceeds accepted standards which have been established by years of experience with relay-based and other traditional protection systems."

3.11.1.3.1.1.2 Updated ACIS Description

The ACIS for the LEA uses a safety certified programmable controller, which incorporates two independent input and output devices and channels with independent cross-checking processors for all critical safety functions.

A detailed technical review of the updated ACIS design was held in July 2015 with a panel five accelerator safety interlock engineers, each from another DOE labs. A summary of this review panel's report follows:

> "The proposed design for LEA makes adequate preparation for developing a system that will meet your long term goals. The methodologies adopted to analyze, assess and mitigate radiological hazards are consistent with international standards, DOE orders and engineering best practices; the rigorous approach assures appropriate choices both in terms of technical solutions (hardware components) and system management (operational procedures, quality assurance, change control)".

3.11.1.3.1.2 ACIS Equipment Description

Maze Door Equipment Racks: The location of the ACIS equipment for the linac/PAR implementation is shown in Figure 3.28. The equipment racks are installed at the electron gun maze door, called the Gun Door, at the linac maze door, called the linac Door, and at the PAR area maze door, called the PAR Door. The location of the ACIS equipment for the LEA implementation is shown in Figure 3.29. The equipment is installed at the LEA end-station maze door, called the West Door. The location of the ACIS equipment for the synchrotron implementation is shown in Figure 3.30. The equipment racks are installed at the synchrotron's injection-side maze door and in the extraction-side electronics room in building 420. The location of the ACIS equipment for the storage ring zone-F implementation is also shown in Figure 3.30. The equipment rack is installed in the extraction-side

electronics room in building 420. The location of the ACIS equipment for the storage ring implementation is shown in Figure 3.31. The equipment racks are installed at the five super door locations, one for each of zones A through E. These racks house PLC I/O modules and other hardware, system status indicators, power supplies (one for each chain), and control panels. Internal access to all ACIS racks is restricted to the ACIS system engineer or designee and the racks are locked and tamper-alarmed.

Controlled Access Key Banks: Controlled Access key banks are located at each maze door. Contacts from these controlled access key switches are monitored by Chains/channels A and B. Personnel entering the tunnel in the Controlled Access Mode must remove a key and keep it in their possession while they are in the tunnel. Escalation from Controlled Access Mode in inhibited and controlled equipment is disabled until all keys are in their respective key banks. Once a beam permit state is achieved, removal of a controlled access key will sound an alarm in the APS control room.

PLC Processor Equipment Racks: The two PLC processor racks (one for each ACIS implementation, linac/PAR, synchrotron, LEA, RF Area (zone F), and storage ring) are located in the APS control room. Each rack, for the original ACIS implementations, contains two PLC processors (one for each PLC chain), and their I/O modules. Each rack, for the updated ACIS inplementation, contains one safety certified PLC processors and their associate safety and standard I/O modules. Each rack also houses two system control panels. One is for routine operation of the ACIS by control room operators and the second is for testing and maintenance purposes. Alpha-numeric display panels provide control room staff with ACIS mode status. Internal access to the PLC equipment is restricted to the ACIS system engineer or designee and the racks are locked and tamper-alarmed.

Figure 3.28 Linac/PAR ACIS Equipment

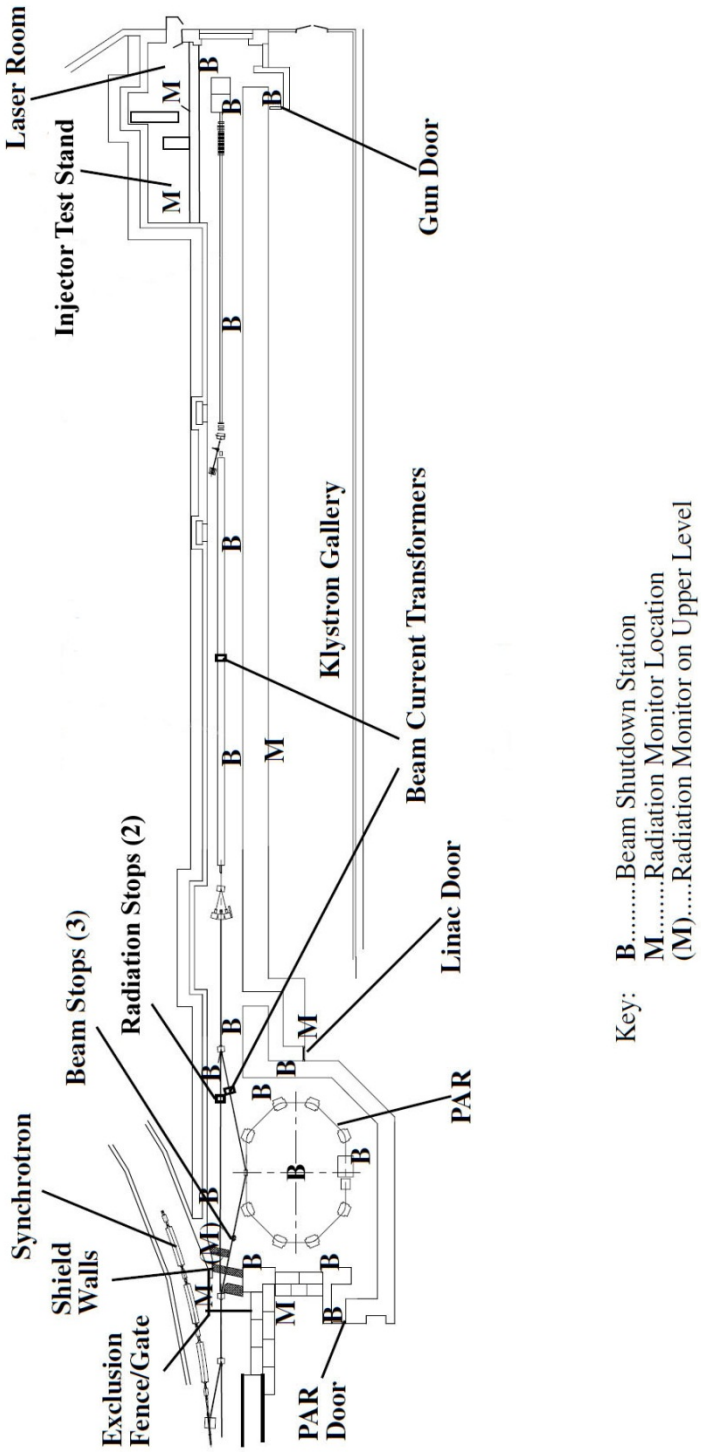

Figure 3.29 LEA ACIS Equipment

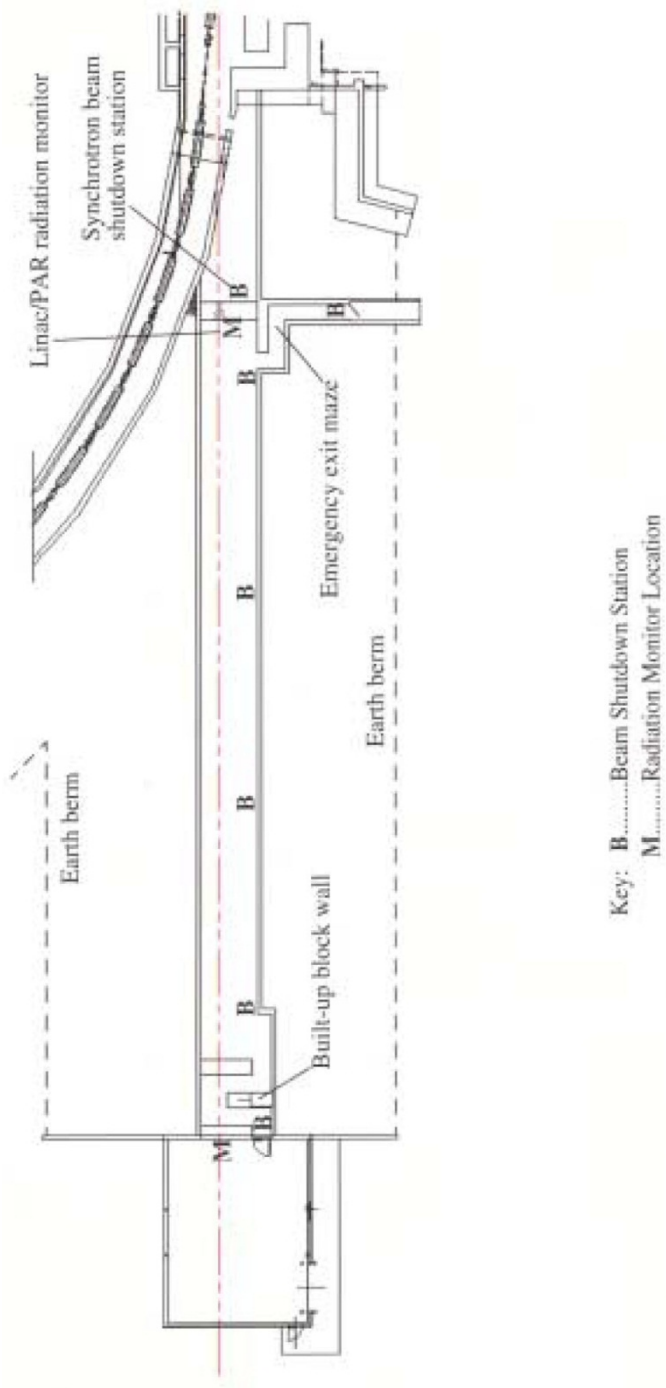

Figure 3.30 Synchrotron and RF Area (Zone F) ACIS Equipment

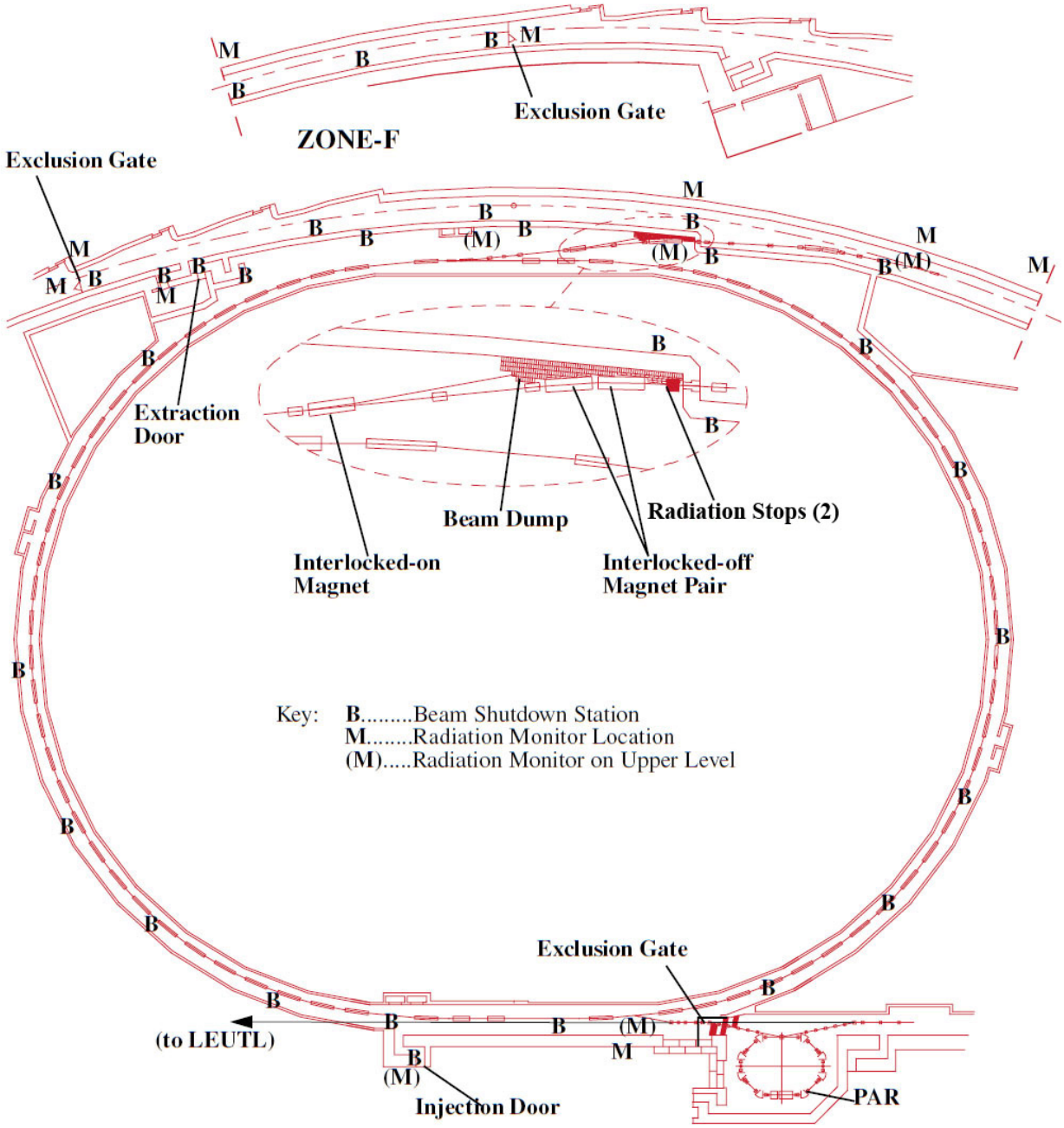

Figure 3.31 Storage Ring ACIS Zones

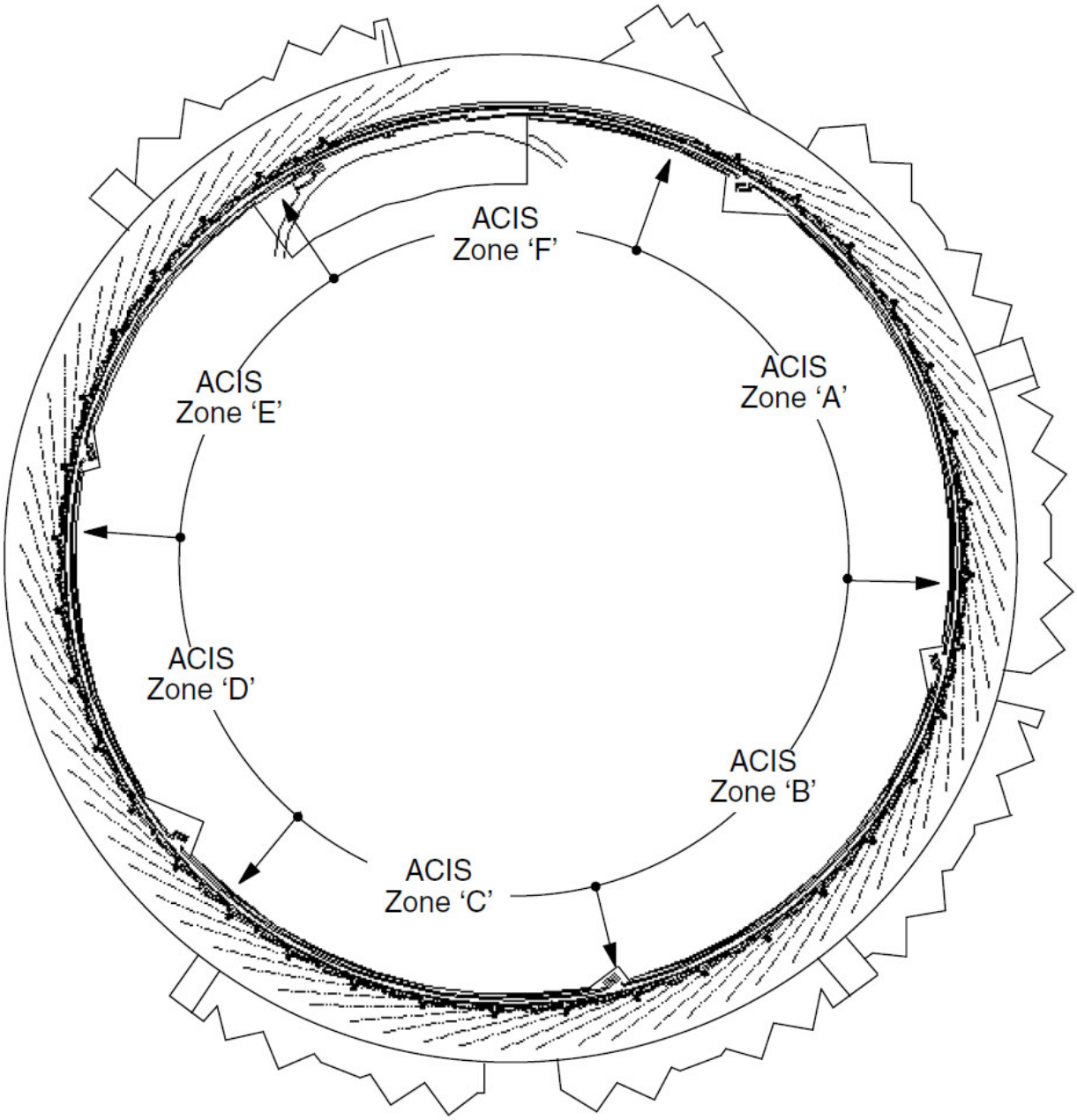

ACIS Status Display: At each maze door, a status display is provided to indicate the ACIS status. This status will indicate to trained personnel the proper procedures required. The messages displayed are:

AUTHORIZED ACCESS MODE - Indicates that the ACIS is not controlling or monitoring entry. All equipment controlled by the ACIS is disabled and beam production is not possible. An additional display line indicates whether or not the access doors are locked for administrative reasons.

SEARCH IN PROGRESS - Indicates that a tunnel search is in progress in preparation for controlled access or beam permit operations.

CONTROLLED ACCESS MODE - Indicates that, although the tunnel is secured, limited access is allowed after proper communication with the control room operator. Except for equipment able to operate in Controlled Equipment Test Mode, all equipment controlled by the ACIS is disabled. In any case, beam production is not possible.

CONTROLLED ACCESS / MAGNETS ON - Indicates that equipment normally disabled is being operated. (In the linac/PAR only the linac gun pulser and rf gun kicker, and either the PAR dipole, or rf systems are allowed to so operate. In the LEA beamline only the vertical bending magnets located in the synchrotron are allowed to so operate. In the synchrotron the dipole is allowed to so operate. In the storage ring only the main dipole system is allowed to so operate.) In each case, accelerated or stored beam is prevented since at least one of the required controlled devices is prevented from operating. When equipment is allowed to so operate, an additional text line is displayed as the above title shows.

BEAM PERMIT PENDING - Indicates that the tunnel has been secured and that a final control action in the control room will transition the ACIS to Beam Permit Mode.

BEAM PERMIT MODE - Indicates that the tunnel has been secured and that equipment controlled by the ACIS is enabled.

NO SHUTDOWN VERIFICATION - Indicates that one of the controlled systems has not indicated that it has been disabled when the ACIS permit has been removed (or that its ACIS interface connector has been removed).

Maze Door Hardware and Features: All maze doors are located at the “radiation-free” end of their respective mazes and are provided with the following equipment features:

- A magnetic door lock to hold the door locked without moving parts or plungers.
- Status switches are provided for each of the interlock chains/channels. Two different types are provided to minimize common-cause failures.

- A “crash bar” for emergency egress which complies to fire-code requirements for “common appearance.” Each crash bar incorporates dual, series-wired switches which interrupt current to the magnetic lock and an additional switch to trip the controlled equipment if the bar is pressed while the ACIS is in a secure (e.g., Pending or Beam Permit) mode. The expection would be the East Door for the LEA tunnel which has only a manual crash bar and a electro-mechanical lock that not controlled by LEA ACIS but permitted by the LEA ACIS

- An emergency entrance button wired in series with the magnetic lock for use by emergency personnel and incorporating an additional pair of contacts to trip the controlled equipment if the switch is used. The exception would be the East Door for the LEA tunnel, which no external emergency entrance button, since it is only used as an emergency exit.

- A clear window to provide visibility, with the exception of the LEA doors.

- No bolt mechanism or hasp is provided, thus preventing the door from being locked by other means.

The crash bar and emergency entrance switches directly affect the magnetic lock circuit and do not depend on operation of the ACIS’s PLCs. In original ACIS implementations, only Chain A monitors and reacts to the crash bar actuation. The dual chains/channels/channels of the ACIS utilize both the emergency entrance and the door status switches to disable all controlled equipment and unlock all doors in the case of any tunnel security breach or other access-related beam trip conditions. Thus, actuation of either of the emergency switches or the door status switches will disable all controlled equipment.

The LEA east emergency exit maze door is not equipped with a remote- controlled lock, CCTV, or intercom provided for controlled access since this door is provided and intended for emergency egress only.

Ratchet Door Hardware and Features: The storage ring enclosure can be accessed by a sliding shield door at each synchrotron radiation port to provide access to the beamline’s front-end equipment. These doors are called “ratchet doors” and are used for installation and removal of front-end equipment. A shutdown button is provided inside near the ratchet door.

Each ratchet door is equipped with a captured-key lock. The keys for these locks are administratively controlled and cannot be removed from its lock unless the door is closed and locked. The door mechanism is equipped with two limit switches, for the ACIS’s Chain-A and Chain-B systems.

Super Door Hardware and Features: The storage ring enclosure can be accessed by a sliding shield door at five outside access points. These doors are large enough to admit an insertion device and are called super doors. The door mechanism is

equipped with two limit switches for the ACIS's Chain-A and Chain-B systems and a captured-key lock. The keys for these locks are administratively controlled and a key cannot be removed from its lock unless the door is closed and locked.

Beam Shutdown Stations (BSS): See Table 3.15 for specific locations of the Beam Shutdown Stations. Each BSS has a large, maintained-position, mushroom-style, push button for shutting down the controlled equipment, a Search/Verification push button, status indicators, a red strobe warning beacon, and two Sonalert- type audible alarms. The beam shutdown button is labeled "BEAM SHUTDOWN" and contacts are provided to affect both ACIS interlock chains/channels/channels. All controlled equipment of the accelerator to which the BSS is related is disabled unless all beam shutdown buttons in that related accelerator are in the non-activated position (pulled out). The BSS status readouts are:

SAFE - Indicates that the ACIS is active and in either the Authorized Access or Controlled Access Mode.

TEST - Indicates that a controlled subsystem normally disabled by the ACIS is operating in Equipment Test Mode.

SEARCH - Indicates the ACIS is in the Search/Verification Mode and the tunnel is being searched.

Beam/Radiation Stops: These stops are designed in a fail-safe manner. Loss of electrical connections or control power, or loss of actuation air pressure will cause the stops to insert by both atmospheric pressure and, in most cases, gravity. Unlike a beam stop, a radiation stop is not intended, designed, or able to withstand continuous beam impacts. Protection for the stop is provided by disabling the linac's electron gunsif the stop is closed during beam operations in this beamline.

These stops are operated by the ACISs in response to manual operation of a control panel located in the MCR, with the exeption of the Booster-to-LEA (BTL) stop, which is controlled by the LEA ACIS HMI touch screens. However, ACIS permission is a prerequisite for opening a stop, and if ACIS rescinds permission, the stop will close. The ACIS does not insert them to provide the sole means of protection, e.g., in the case of a tunnel security breach. In such a case, the equipment shutdown commands are propagated to the upstream ACIS until a closed partition is reached. However, the ACIS will remove permissive control and thereby cause insertion of the stops. In the case of the two linac/PAR-to- synchrotron partitions, assuming that the synchrotron tunnel security has been lost, the linac's electron guns are disabled (by redundant means), but the stop is given 2.5 seconds to insert before all remaining linac and PAR systems are disabled. If the stop inserts in time, these systems are allowed to continue operating.

For the PAR-to-synchrotron (PTB) partition, three beam stops are provided, each with its own actuator and dual-chain limit switches. Any one of these three stops is

capable of completely stopping the beam. In addition, a personnel exclusion zone is provided in the synchrotron tunnel in the vicinity of the partition. All three beam stops must be fully in the inserted position to indicate a closed partition. The exclusion zone fence has an access gate equipped with key-released magnetic lock, the key for which is attached to a PAR Door Controlled Access key. The exclusion zone is small enough to see the entire interior while locking the gate. The inserted position of these beam stops is monitored and enabled by Chain-A and Chain-B of both the linac/PAR and synchrotron ACISs. If either ACIS detects an improper status on the other side of the partition, both sets of permissive contacts are opened and the beam stop is inserted and/or not allowed to be withdrawn.

For the linac-to-LEA (LTL) beamline partition (in the PAR bypass beamline), two radiation stops are provided, each with its own actuator and dual-chain limit switches. These stops are not designed to be able to stop the beam and may be subject to damage by direct beam. For this reason the linac/PAR ACIS monitors the status of the switching bending magnet immediately upstream of this partition and will inhibit the electron guns if this magnet's current is not above one-half of its normal operating level while either of the two stops is closed. The magnet current and in-gap magnetic switches are monitored by Chains/channels A and B. Both beam stops must be fully in the inserted position to indicate a closed partition. The inserted position of these beam stops is monitored by Chain-A and Chain-B of both the linac/PAR and synchrotron ACISs. If either ACIS detects an improper status on the other side of the partition, both sets of permissive contacts are opened and the beam stop is inserted and/or not allowed to be withdrawn.

For the booster bypass beamline, the Booster-to-LEA (BTL), a single radiation stop is provided downstream of the second vertical bend (pitch-level) magnet. This stop is provided to shield the LEA tunnel from radiation created by a nearby beam impact in case the first vertical bend (pitch-up) magnet fails to be disabled by the ACIS. Thus if one of the two critical devices (the two vertical bend magnets) fails to be disabled, the stop will still provide protection in the LEA tunnel.

For the synchrotron-to-storage ring partition, a pair of series-connected and interlocked-off bending magnets followed by two radiation stops, each with its own dual- chain limit switches, is provided. An interlocked-on bending magnet is used to direct the beam to the dump and away from the above devices. In addition, zone-F of the storage ring tunnel, in the vicinity of the partition, must be in a Beam Permit Mode to allow beam operations in the synchrotron. Multiple methods are used to insure that the first bending magnet is on, that the second bending magnet (pair) is off, and that both radiation stops are in the fully inserted position to indicate a closed partition. The pair of radiation stops have the function of shielding occupants of the synchrotron tunnel from radiation related to stored beam in the storage ring. Either of these is adequate for this purpose. The inserted-position of these radiation stops is monitored by Chain-A and Chain-B of both the synchrotron and zone-F ACISs. These stops are not intended, designed, or able to withstand continuous beam impacts and so are called radiation stops. If either of these stops are closed, beam

operations are prevented in the synchrotron unless the extracted beam is directed to the beam dump.

For the storage ring-to-experiment beamline partition, a set of four shutters, collectively known as the front-end shutters, is employed. A pair of safety shutters, SS-1 and SS-2, must be inserted to protect the occupants of an experiment station from bremsstrahlung radiation. Either of these safety shutters is adequate to stop the bremsstrahlung radiation. Preceding the safety shutters is a pair of photon shutters, PS-1 and PS-2, one of which must be inserted to protect the safety shutters from the heat load of the synchrotron radiation beam. All four shutters are designed to insert with loss of electrical input to their control valves or loss of compressed air. Before normal filling can begin (initial filling or filling the ring with less than a specific minimum current circulating), a permissive is removed which will result in the closure of all beamline shutters and a closed status must be seen for all safety shutters and for all PS-2s before the beam can be injected into the storage ring. At the conclusion of filling, the permissive is restored and the pair of safety shutters and PS-2s are opened at the discretion the individual experimenters. The inserted-position of these safety shutters is monitored by Chain-A and Chain-B of both the storage ring ACIS and the individual beamline PSS. For top-up mode filling (with the ring circulating greater than a specific minimum current and the storage ring operating above 6 GeV), the beamline shutters are allowed to be opened.

Area Radiation Monitors: Area radiation monitors, located outside the radiation shield wall in occupied areas, provide local and remote indication of the gamma or neutron and gamma radiation levels at their location. The gamma and neutron sensors will generally be mounted outside the radiation shielding and the processor/readout units are placed in a nearby location convenient to personnel. Additional monitors are located in occupied areas above the PAR, synchrotron, and storage ring tunnel areas where personnel are allowed. Each monitor has local visual and audible alarm indicators and two relay contacts which deactivate when an internally adjustable high- level limit is exceeded. Local audible and visual alarms are provided for failure conditions, warning alarms, and high-level limit alarms.

The high-level limit relay contacts are provided to affect both ACIS PLC interlock chains/channels to ensure a beam shutdown when this preset limit is exceeded. This beam shutdown is not a “trip,” which would require a trip reset procedure, but it does remove the beam permit condition from both electron guns during linac, PAR, LEA, and synchrotron operation, and thus prevents additional radiation. In the case of the storage ring, the guns are disabled during the filling process, and in any case, the low-level rf systems are disabled, resulting in the dumping of the stored beam. The monitors’ radiation readings are available on their local control panels. The units are powered from uninterruptable power supplies. In the event of a complete loss of power, the beam shutdown contacts will open and shut down the controlled equipment and disable beam production.

Five radiation monitors are currently provided for the linac: one in the Linac Laser Room, one in the RF Gun Test Area, one along the linac wall, one at the linac downstream maze door and one within the LEA tunnel as shown in Figure 3.28 with the symbol **M**.

The PAR area has three radiation monitors, one outside the PAR shield wall, one in the personnel area above the PAR in the vicinity above the LET beam stops, and one within the synchrotron tunnel at the end of the LET. These radiation monitor locations are indicated on Figure 3.28 with the symbol **M**.

One radiation monitor is currently provided for the LEA in the LEA End Station with the probes located against the tunnel's end wall. The location of this monitor is indicated on Figure 3.29 with the symbol **M**.

The synchrotron area has three radiation monitors located in the injection area: one above the maze door, one above and one aside the injection septum. There are two radiation monitors on the extraction side and two on the operating floor area above the synchrotron tunnel. These radiation monitors are indicated on Figure 3.30 with the symbol **M**.

The zone-F area of the storage ring has eight radiation monitors: one at the zone-F maze door, four on the operating floor along the outer shield wall of the storage ring, one above the injection septum area, one in the tunnel at the upstream gate, and one in the tunnel at the downstream gate. These radiation monitors are indicated on with the symbol **M**.

The remaining zones of the storage ring (zones A through E) have a radiation monitor on the operating floor at each sector near the upstream end of the insertion device. Each sector utilized by a beamline will have a dedicated monitor at the wall near the insertion device for the upstream sector if an insertion device is installed at that location. These radiation monitors are indicated on Figure 3.32, an example zone, with the symbol **M**.

The monitors now provided are summarized in Table 3.15. As APS operations evolve and higher and lower radiation areas are identified, monitors are reconfigured to provide enhanced coverage of the highest external radiation fields.

Figure 3.32 Location of Storage Ring Zone-C ACIS Equipment

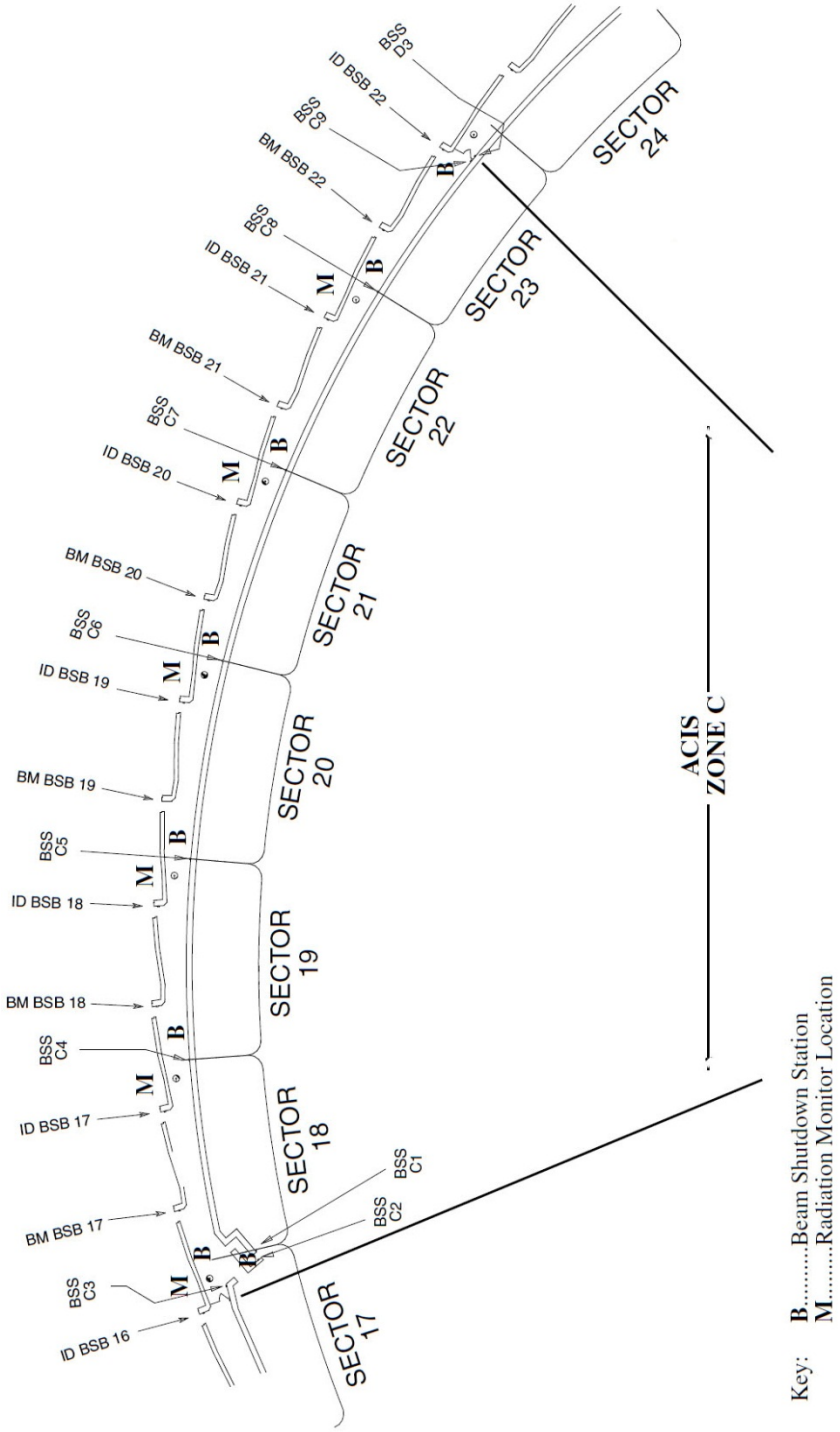

Table 3.15 Summary of ACIS Components

	Linac/PAR	Synchrotron	Storage Ring including Zone-F	LEA
No. of maze doors:	3	2	6	2
No. of exclusion fences/ gates:	1 (in synch. tunnel)	none	6 (to isolate all zones)	none
No. of BSSs:	15	21	43	6
No. of radiation monitors:	8	5	8 + 1 for each ID-equipped sector	1
Equipment disabled:	Linac: 6 modulators, 6 rf drives, 3 electron guns PAR: rf system, & main dipole	rf systems: modulator, rf drive Magnets: main dipole	rf systems: 4 modulators, 4 rf drives Magnets: main dipole	pitch-up, pitch-level-magnets
Equipment operable in Equipment Test Mode:	Linac: rf gun kicker & PC gun laser PAR: rf system & main dipole	main dipole	main dipole	pitch-up and pitch-level magnets
Number of controlled access keys:	24	16	58	8
Interlocked beam current monitors:	3	none	2	none
Beam stops:	PAR-to-booster (3)			Booster-to-LEA (1)
Radiation stops:	Linac to LEA (2)			
Front-end shutters:			3 or 4/beamline	
Interlocked bend magnets:	1	2	none	2 (as controlled equipment)

The gamma sensors provide a "heartbeat," supplied by a small gamma source which is placed within the probe near the ion chamber detector, indicating an operating condition. The neutron sensors also have a "heartbeat" capability, supplied by a small spontaneous fission source placed by the detector in the moderator. Both the neutron and gamma sensors are included in a regular testing and calibration program conducted by the Argonne ESQ Division.

Interlocked Beam Current Transformers: There are three beam current transformers, whose electronics are connected to the linac/PAR ACIS for beam intensity-related shutdowns of the linac. One is located at the end of the linac; a second is located in the low energy transport (LET) beamline to the PAR; and a third is located in the LET just prior to injection to the synchrotron. These three transformer and electronics systems are independent of each other and only a buffered monitoring signal is provided from each for operational use. They will disable the electron guns via the ACIS to enforce the safety envelope power levels.

All three systems employ a continuous self-test function, which uses a test winding and signal comparators to perform a complete system check after each linac trigger, whether or not real beam is present. The "real" linac pulse is compared to an upper limit and the test pulse is compared to high and low limits. If any of these limits are exceeded during their test periods, relays are opened and the ACIS will disable the electron guns via both PLC interlock chains/channels. The beam transformer systems are fail- safe (that is, they produce a shutdown) for: loss of power, loss of linac trigger, service cover removal (required for access to the limit adjustments), open or shorted test pulse wiring, open or shorted transformer wiring or coils, open ACIS wiring, or removed ACIS signal connector. All of the beam transformer system functions are tested as part of the ACIS validation test procedure and the systems are included under APS RSS configuration control.

The current transformer system at the end of the linac are set to limit the accelerated electron beam power to 1 kW.

The LET current transformer system is set to limit beam power injected to the PAR below 20 W.

If the PAR is bypassed in favor of other means of establishing bunch purity, the new injector configuration will be capable of higher intensity than either required or desired for safety envelope purposes. For this reason, an additional interlocked current monitoring system is installed in the LET beamline just upstream of the booster injection point to enforce the existing safety envelope in the same way and using the ACIS in the same manner as those in the LET beamlines. This LET current transformer system is set to limit beam power injected to the storage ring to 20 W.

Interlocked Stored Beam Current Detectors: There are two stored beam current detectors, whose electronics are connected to the rf area ACIS to ensure that a

minimum level of stored beam is circulating during top-off injection. If both detectors are indicating sufficient circulating beam, injection is allowed to continue with photon beamline shutters open. If the circulating beam drops below the minimum current setting, injection is inhibited by disabling the electron guns and closure of the linac/PAR-to-synchrotron partition. All of the beam current detectors' outputs are tested as part of the ACIS validation test procedure, where actual functionality of the detectors themselves are tested by the Diagnostics group, and the systems are included under RSS configuration control.

Communication and Interconnection Wiring: Most inter-rack communication is via fiber optic cables for immunity to electrical interference. These fiber cables are not routed in the accelerator tunnels due to the potential for radiation-induced darkening, but are routed in tray systems set aside for fiber-optic cable use or in trays dedicated to ACIS use. Multiconductor copper cables are used to interface the BSSs, door hardware, radiation monitors, and controlled equipment since these are all hard-contact and, in some cases, relay-based connections.

As per the guidance document for DOE 5480.25 Guidance (DOE 1993b), all ACIS cables are protected with rigid or flexible conduit whenever outside of ACIS cable trays or racks.

Table 3.15 summarizes the components and other details of the five ACIS implementations.

3.11.1.3.1.3 Operation Interruption Methods

Linac Operation Interruption Methods: To disable the production of prompt radiation by the linac, the following separate linac systems are disabled by the ACIS interlock chains/channels:

- the high voltage power supplies (HVPSs) in all six modulators (five operational modulators and one for the ITS),
- the rf drives for all six klystrons,
- the thermionic rf guns' beamline kickers, and
- the photocathode rf gun's laser.

All electron guns are disabled in response to radiation monitor limit alarms, regardless of operating mode. Two methods are used to disable all guns, although the methods used are necessarily different. The methods used for the three guns are as follows:

Thermionic rf guns:

- rf drive to klystrons able to be switched to the guns and

- beam kicker required to kick beam past an obstruction.
- Photocathode rf gun:
- rf drive to klystrons able to be switched to the guns and
- tunnel shutter gate valve (also laser trigger if gate valve does not close within 2 seconds).

In the case of all three guns, either of the two disable methods are sufficent to prevent either beam generation or injection into the linac structure.

PAR Operation Interruption Methods: With the linac disabled, no source of particles is available to the PAR for injection. However, to prevent retention of an already stored beam and to prevent the propagation of beam to a downstream area, the PAR is also disabled. The following PAR systems are disabled by the ACIS interlock chains:

- the PAR main dipole power supply, and
- the PAR rf systems, both fundamental and 12th harmonic.

Disabling either of these systems will assure the interruption of beam.

Synchrotron Operation Interruption Methods: To disable the production of prompt radiation by the synchrotron, the following synchrotron systems are disabled by the ACIS interlock chains:

- the synchrotron main dipole power supply, and
- the synchrotron rf system.

Disabling either of these systems will assure the interruption of beam.

The dipole power supply is disabled in two steps. The first step is to complete the ongoing ramp and then immediately stop the following ramps. This step takes no more than 0.5 second after the power supply receives the ACIS trip signal. The second step opens the power supply main power contactors one second after the power supply receives the ACIS trip signal. This delayed tripping minimizes the destructive effects of opening the power supplies' main power contactors under load.

RF Area Operation Interruption Methods: To disable the production of prompt radiation by the RF Area and rentention of beam in the Storage Ring, the following RF Area systems are disabled by the ACIS interlock chains:

- the storage ring main dipole power supply, and

- the RF Area rf systems.

Disabling either of these systems will assure the interruption of beam.

LEA Operation Interruption Methods: To disable the introduction of prompt radiation by an electron beam from the linac, the following systems are disabled by the LEA ACIS interlock system:

- the power supply for the bending magnet which bends the linac electron beam upward within the synchrotron tunnel , and

- the power supply for the bending magnet which bends the linac electron beam level again within the synchrotron tunnel.

With either of these two power supplies disabled, the electron beam cannot be sent to the LEA enclosure due to collimation provided by the two concrete walls which follow these magnets. Due to this same collimation, the beam injected and accelerated in the synchrotron cannot reach the LEA enclosure.

Either of the above two magnet systems being disabled will prevent the direct introduction of beam into the LEA enclosure. However, in the event that the upstream magnet fails to turn off, beam sent to the downstream magnet will impact in the magnet and beamline components in proximity to this downstream magnet. The resulting radiation (estimated to be 131 mrem/h in the worst case) will be able to reach the LEA tunnel interior in spite of the collimation provided by the two concrete walls. For this reason, a radiation stop is provided downstream of the downstream magnet to stop this secondary radiation. The permissive signals from the LEA ACIS are removed for this stop whenever the two controlled magnets are disabled to insure the safety of the LEA tunnel interior. Since this radiation stop is not capable of absorbing or stopping the direct electron beam, it must be opened prior to the introduction of beam into the LEA tunnel interior.

Storage Ring Operation Interruption Methods: To disable the production of prompt radiation in the storage ring, the following systems are disabled by the ACIS interlock chains:

- the storage ring main dipole power supply via the RF Area ACIS, and

- the RF Area rf systems via the RF Area ACIS.

Disabling either system will assure the interruption of beam.

3.11.1.3.1.4 Tunnel Occupant Protection Methods

Linac/PAR Tunnel Occupant Protection Methods: Assuming beam could be stored in the synchrotron, occupants of the linac/PAR tunnel are protected from radiation entering the tunnel by the two stop systems, PTB and LTL. Both stop

systems must be fully closed for the synchrotron ACIS to remain in beam permit with the linac/ PAR ACIS in a tunnel-occupied mode. Both interlock chains of both the synchrotron and linac/PAR ACISs enforce this protection.

Synchrotron Tunnel Occupant Protection Methods: Occupants of the synchrotron tunnel are protected from beam entering the tunnel from the linac or PAR by the two stop systems, PTB and LTL, respectively. Both stop systems must be fully closed for the linac/PAR ACIS to remain in beam permit with the synchrotron ACIS in a tunnel- occupied mode. Both interlock chains of both the synchrotron and linac/PAR ACISs enforce this protection. Occupants of the synchrotron tunnel are protected from back- streaming radiation entering the tunnel from the storage ring by the BTS radiation stop system, located in the high energy beam transport line. This stop system must be fully closed for the storage ring ACIS to remain in beam permit with the synchrotron ACIS in a tunnel-occupied mode. Both PLC interlock chains of both the synchrotron and RF Area (Zone F) ACISs enforce this protection.

LEA Tunnel Occupant Protection Methods: Occupants of the LEA tunnel are protected from radiation entering the tunnel from synchrotron operation by the collimating effect of the shield walls through which the linac-to-LEA electron beam must pass. In addition, the radiation stop in this beam transfer line must be fully closed for the synchrotron ACIS to remain in beam permit with the LEA ACIS in a tunnel- occupied mode. The LEA ACIS enforces this protection. Occupants of the LEA tunnel are protected from beam entering the tunnel via the linac- to-LEA electron beam transfer line by this same radiation stop and by the two controlled equipment systems of the LEA ACIS. These systems are the two vertical bending magnets required to translate the beam up and align it with the synchrotron and LEA tunnel wall penetrations. This will prevent beam from being sent to this area by the failure to disable the upstream bending magnet.

Storage Ring Occupant Protection Methods (Zone-F): Occupation of Zone-F of the storage ring is not permitted during beam operations in the synchrotron.

Storage Ring Occupant Protection Methods (Zones A-E): Occupation of storage ring zones A-E is allowed during beam operations in the synchrotron only if Zone F is secure and beam is not being injected into Zone F. This partition consists of a double radiation stop system and two bending magnet systems, the first of which must be on (to direct beam to a lead beam dump) and the second of which must be off (to redundantly direct beam to another lead beam dump). Both of these magnet systems are monitored for proper current and by in-gap magnetic switches, and both interlock chains of the RF Area (Zone F) ACIS enforce this protection. This double radiation stop must also be fully closed and is monitored by both the synchrotron and RF Area (Zone F) ACISs to enforce this protection.

3.11.1.3.1.5 ACIS Implementation Methodology

PLC Methodology and ACIS Application: The Programmable Logic Controller (PLC) is a special-purpose microprocessor which executes a "program" consisting of relay ladder logic relationships to carry out logical control functions. PLCs are designed for use in environmentally harsh and electrically noisy conditions and have been widely used in industry for both operational and personnel safety applications. The Instrument Society of America (ISA) has rated implementations with dual-redundant PLCs, external watchdog timers, dual sensors, and control elements wired in series (the methodologies employed for the original ACIS implementations) to be suitable for both environmental and employee safety applications. (See Figures 3.33 and 3.34.) The PLC used in the updated ACIS implementation is TÜV Rheinland certified be used in applications up to Cat. 4 / PL e acc. to EN ISO 13849-1, SIL CL 3 acc. to EN 62061 / IEC 61508 / IEC 61511 / EN 50156-1. These international and national safety standards were create after the original ACIS implementations were completed.

The PLC methodology was chosen for the ACIS implementations for the following reasons:

- High flexibility, allowing adaptation to partial accelerator operation (such as the initial 2-sector storage ring implementation) and other APS variations, both planned and under consideration.
- High system reliability, as compared to relay-based implementations, for large signal-count applications.
- Reliability and availability enhancement opportunities, such as the addition of self tests and operation verification tests.
- Faulty component diagnosis features, allowing the identification of intermittent field components.
- Self documentation with ladder logic, functional relationships, and database documentation produced from the actual PLC code instead of the designer's intent of the logical implementation.
- Completely modular design, allowing partial or complete replacement of ACIS subsystems and modules.
- Superior testability, with all functional reactions testable without enabling real Controlled Equipment.

The PLC ladder logic program is developed with a personal computer connected to the PLC for this purpose. During actual operation of the ACIS, the PC may be connected to the PLC for data monitoring purposes, with its editing capability disabled. After the program is developed and tested, it is "burned" into an

electrically erasable, programmable, read-only memory (EEPROM or Flash) installed in the PLC. At PLC power up, this EEPROM program can be transferred to the PLC's random-access memory (RAM). During program execution a checksum or safety signature is displayed on a readout and checked against a logbook copy of the checksum or safety signature of the most recently validated program.

During execution of the program, the checksum or safety signature is recomputed periodically to self-check for any program changes.

A programming key is required to gain access to the PLC processor to download a new program or to acquire the edit resource to modify an existing program. Once the key is removed in the RUN mode, the PLC program cannot be modified by any method.

When a new program is installed or an existing program is modified and passes its Validation procedure, the program is stored into an on-board EEPROM for backup. If power is lost to the PLC processor the system is configured to automatically load this file in the EEPROM into the PLC RAM when power is restored.

Continuity of PLC Operation: One PLC malfunction mode given special attention is cessation of operation. The PLC manufacturer provides two means to detect such a failure:

- A software "watchdog timer" utility with a program-settable time interval. If this timer "times-out" and a processor fault is generated, communication with all remote I/O modules is stopped and the external watchdog timers time out and all sets of Controlled Equipment are disabled.

- An on-board hardware verification, which checks the integrity of the data and address busses, is executed every 10 ms. A detected fault also generates a processor fault with the same reaction as the software watchdog timer fault.

In addition, the original ACIS implementations have been provided with watchdog circuits external to the PLCs which also require periodic program stimulation. If this timer is not triggered periodically by the PLC, the controlled equipment relays will be disabled and all beam production will be disabled. The status of each chain's external watchdog timer is routed to the opposite chain's PLC, insuring that both sets of equipment are disabled. (See Figures 3.33 and 3.34.)

ACIS Software Development Procedures: The software utilized by the ACIS PLCs is developed and controlled with stringent review, testing, security, and QA procedures. The following sections describe the procedural steps required for initial software development and all subsequent modifications. Details can be found in "Safety Interlocks Group Safety Software Configuration Control" (APS_1412978).

1 - Functional Design Specification: Before detailed design and implementation of any ACIS software component begins, a functional specification is written.

This document ties the protection requirements from the various DOE, Argonne, and APS policies to the software which enables the ACIS PLC system to implement these requirements. This document contains an accurate statement of the ACIS requirements and a detailed description of the functional operation being provided. It enumerates devices to be disabled, types and quantities of inputs and outputs, and spells out any timing requirements.

The functional design specification is reviewed by the ACIS system engineer's group leader and that group's Associate Division Director to verify that the function complies with this APS Safety AssessmentDocument.

2 - Implementation: The ACIS software is developed using PLC programming practices. The ladder logic diagrams are intelligible and available to all interested parties and reviewers. Two independent PLC programmers are utilized, one for each of the two redundant PLC implementations (Chain-A and Chain-B). Once the software is released for operation it is placed under software configuration control per the document "Safety Interlocks Group Safety Software Configuration Control" (APS_1412978).

3 - Software Validation: This step in the software development process is designed to assure that the functionality of the software is complete and correctly implements the Functional Design Specification. The program is tested using a validation procedure, based on the Functional Design Specification to verify compliance. The validation plan is independently reviewed to insure that all ACIS functions and components are adequately and independently tested. The validation procedure is preformed and signed off as each function is tested and proven.

4 - Media Control and Security: All executed validation plans, with physical sign-offs and check-offs are filed and stored securely by the Safety Interlocks group. All PLC code is stored electronically.

Figure 3.33 Typical PLC-Controlled Equipment Interface - Chain A and HW Circuits

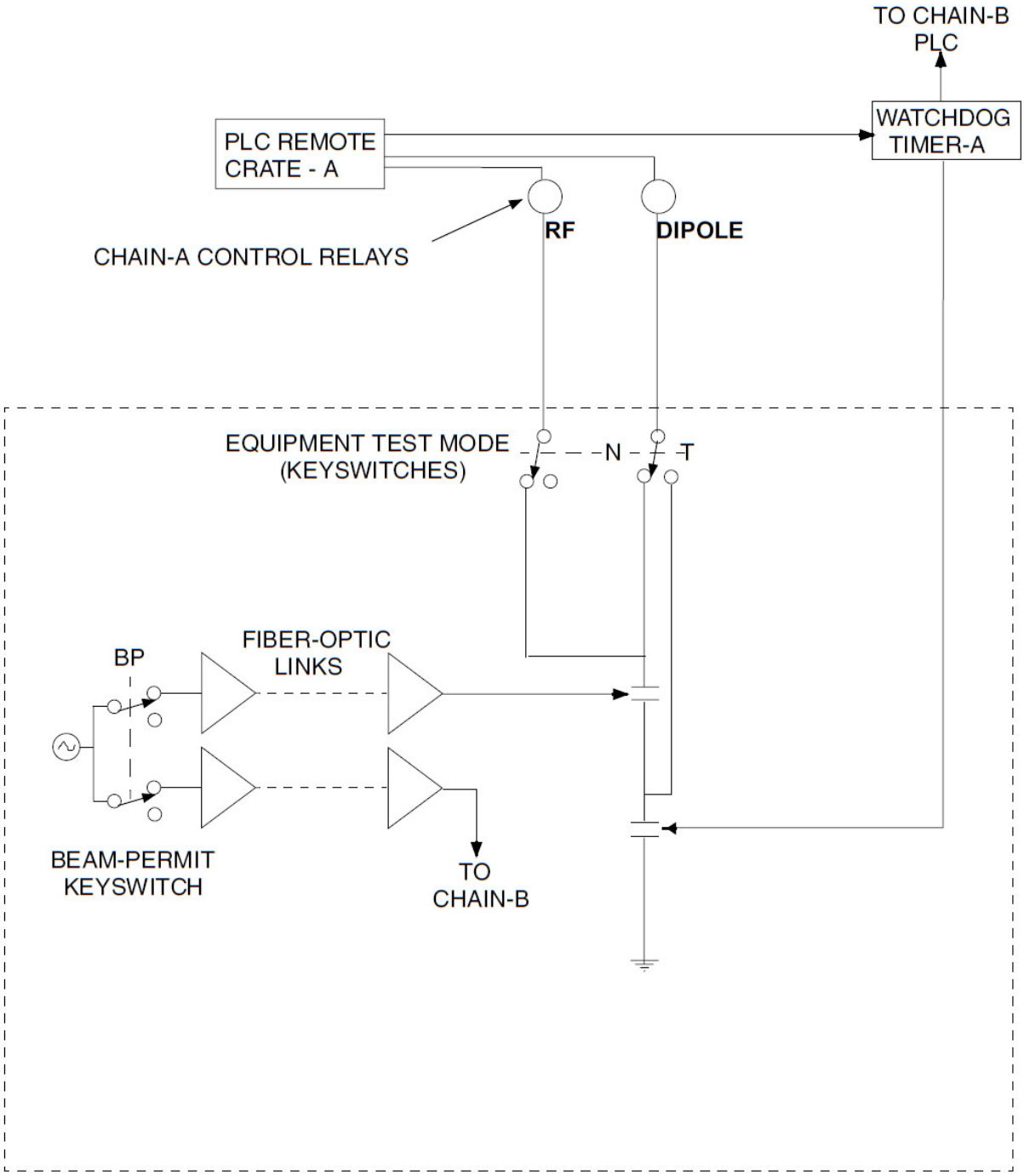

Figure 3.34 Typical original ACIS PLC-Controlled Equipment Interface - Chain B and HW Circuits

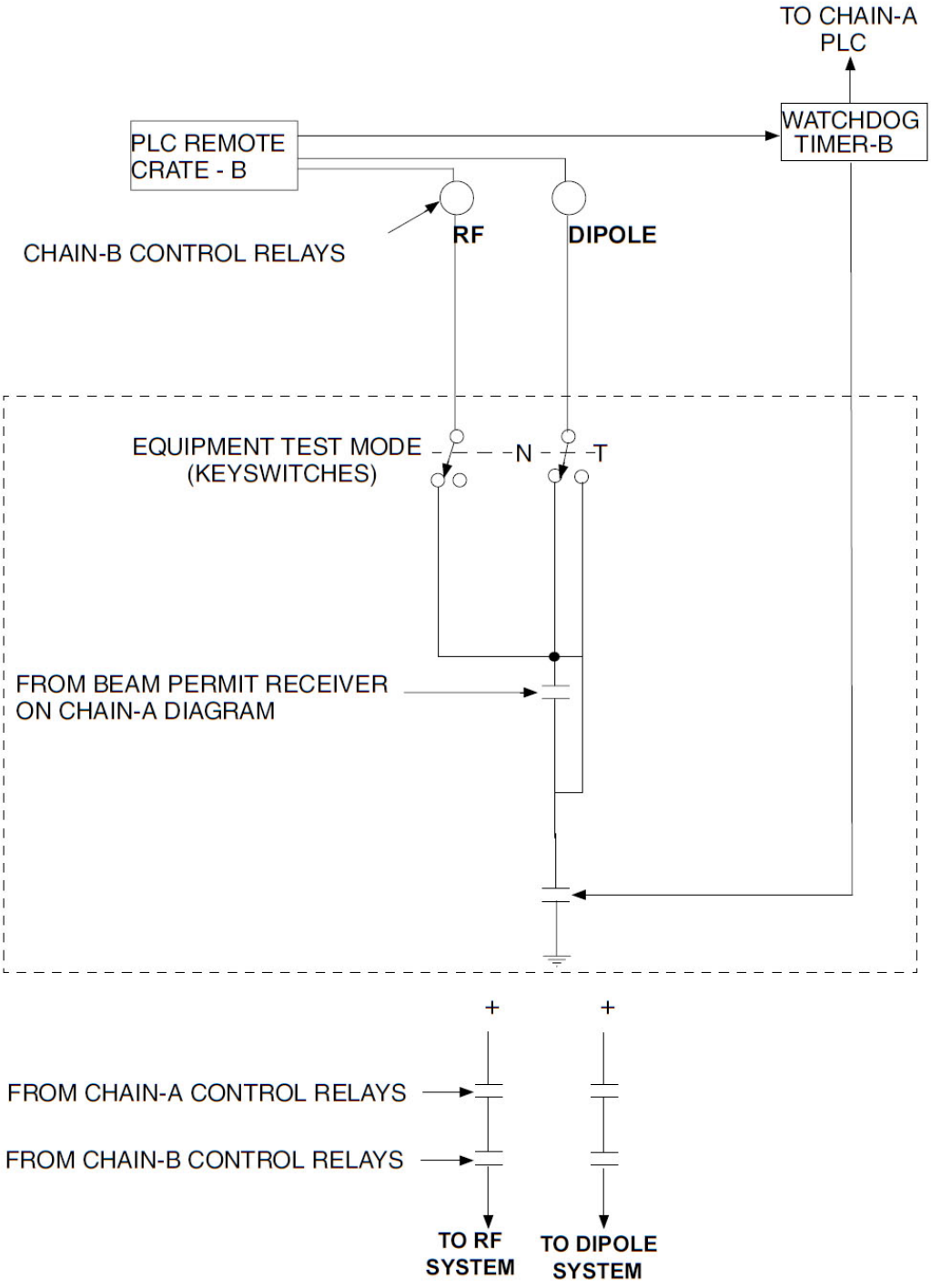

Figure 3.34a Typical updated ACIS PLC-Controlled Equipment Interface

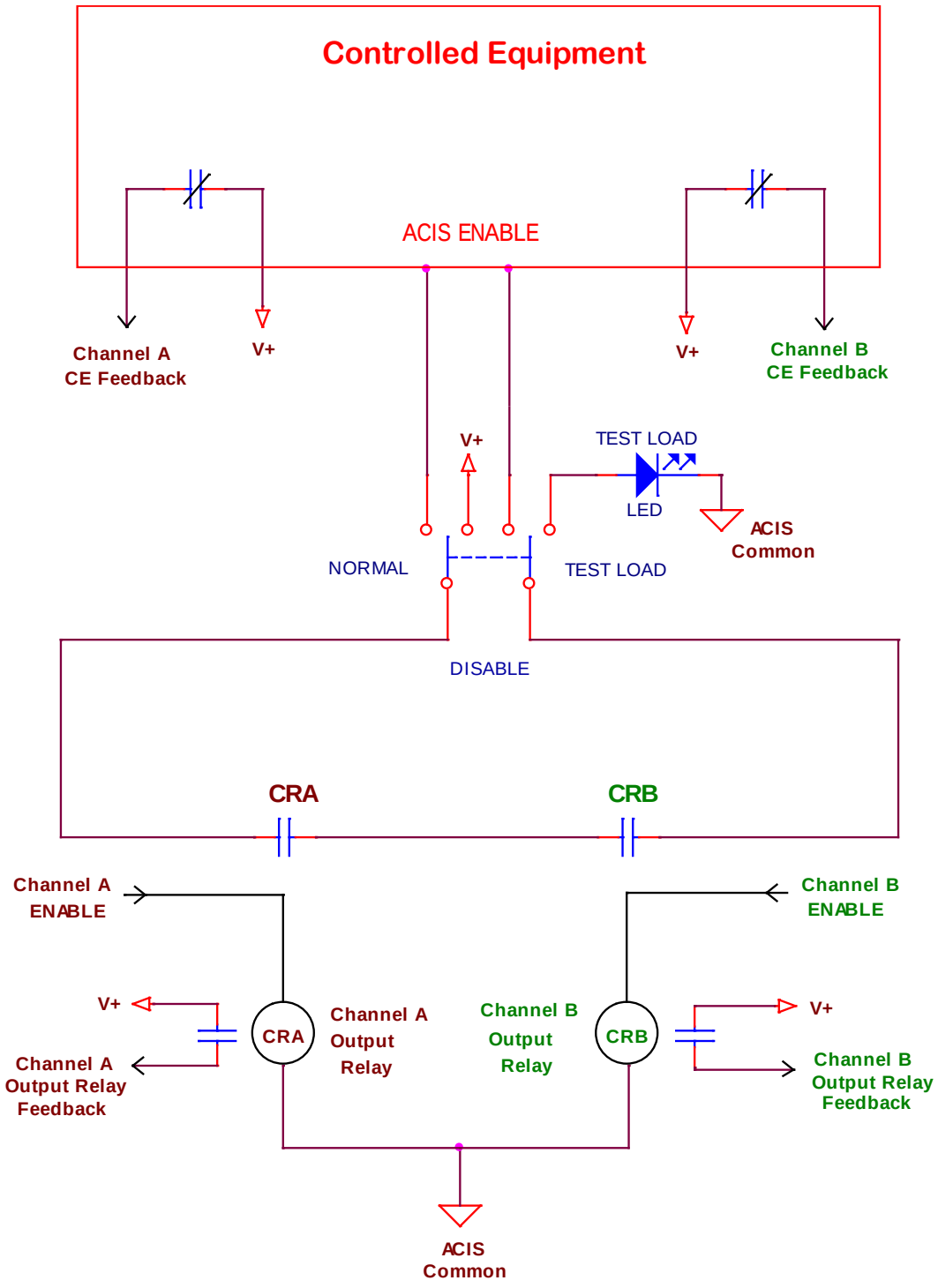

ACIS Software Installation for Operation: At installation time for a new version of the PLC software, the revised version of the software is transferred from the APS approved controlled software repository and is installed in the PLC development computer. This new software is then downloaded into the PLC's memory and "burned" into the on-board EEPROM or flash memory card. At this point, the complete ACIS validation test procedure must be executed which corresponds to the new software version just installed. The checksum or safety signature is also recorded for use in future checks to insure that the downloaded software has not been modified.

3.11.1.3.1.6 ACIS-PSS Interface

All experiment beamlines have an on-line/off-line keyswitch located in a junction box associated with each storage ring sector and located on the storage ring mezzanine. This box contains the ACIS/PSS interface circuitsand is maintained by the ACIS staff, and is accessible by ACIS staff, Operations group personnel, and the APS Floor Coordinators. When the keyswitch for a beamline is set to off-line, its shutters (PS-2, SS-1, and SS-2) are prevented from opening and the PSS trip signal is ignored; however, if the ACIS detects that any off-line beamline shutter is open, it immediately trips the stored beam. When the keyswitch is set to on-line, the shutters are allowed to open (during stored beam conditions and PSS permission) and the PSS trip signal is operative. The PSS trip signal is also ignored if all monitored front-end shutters are closed.

3.11.1.4 ACIS Operational Procedures

Strict adherence to the various operational procedures is required to enable operation of the linac/PAR, LEA, synchrotron, RF Area, and storage ring under the control of their respective ACIS implementations. Proper execution of other procedures is required on the part of operators in those (essentially human) aspects which the ACIS cannot control or guarantee, such as the tunnel searching process and the CCTV monitoring of personnel entering and exiting the tunnels during the controlled access mode. Such procedures are the subject of required training for all staff authorized to operate the linac, PAR, LEA, synchrotron, or storage ring or enter their respective tunnel areas.

3.11.1.4.1 Conditions for Linac/PAR Operation

Linac/PAR Beam Operation Enabled: For the Linac/PAR ACIS to reach "Beam Permit Mode" and for the linac and PAR to allow their controlled equipment to be energized, the following conditions must be met:

- linac/PAR area search has been completed,
- all three doors to linac/PAR tunnel are closed,

- all controlled access keys are in their keybanks.
- all beam Shutdown Stations are armed, (i.e., the BSS pushbutton is pulled out),

AND

- PAR-to-booster (PTB) and linac-to-LEA (LTL) stops are in the closed position OR
- synchrotron ACIS is in a beam permit condition (beam can be sent to the synchrotron).

Area Access (ACIS authorized access or controlled access): To gain access to the linac/ PAR area, the beam permit is removed. If not already off, the linac systems and PAR systems listed in the previous section are disabled by this action. Note: Normal operating procedures dictate that these systems be turned off first by non-ACIS controls.

Operation Termination: If any of the three access doors to the linac/PAR tunnel enclosure are breached, a beam shutdown button is pressed, or either the PTB or LTL stops are withdrawn with the synchrotron ACIS not in a beam permit condition, the redundant protection terminates the operation in the area by disabling the linac and PAR systems. If a radiation monitor indicates a high alarm or either interlocked beam toroid indicates an out-of-limit beam condition during operation, all electron guns are disabled and permissives removed for both the PtB or LTL stops, causing them to close.

A test mode is provided to allow the rf guns' beamline kickers and the photocathode gun's laser to operate while the ACIS is in Controlled Access Mode (the tunnel may be occupied under controlled conditions). In this mode, the high voltage power supplies (HVPSs) in the six rf modulators remain disabled and the rf drive amplifiers to the six klystrons are disabled. The modulator high voltage and the rf amplifiers are never allowed to operate unless the linac/PAR tunnel has been searched and secured, i.e., personnel access is not allowed. In addition to the electron guns, either the PAR main dipole, or rf system is also allowed to operate in this same test mode, but never more than one PAR system at the same time. An exception is made for the PAR rf to allow it to operate in Authorized Access or Controlled Access Mode during machine maintenance periods using a monitored bypass installed in the ACIS. This is allowed since the PAR rf is not dangerous to personnel. However, the ACIS prevents escalation out of Controlled Access Mode if this bypass is active.

Conditions for Controlled Access: The linac/PAR ACIS can be operated in a mode which allows access to be monitored and controlled from the Main Control Room (MCR), followed by a return to beam operations without a tunnel search. This mode can be reached by a transition down from beam permit mode or by a transition up

from authorized access mode (which requires a tunnel search). This process is described below in section 3.11.1.4.6.

3.11.1.4.1.1 Linac/PAR Interleaving Operation

Once Top-up mode Operation (section 3.11.1.4.4.6) is eastablished, Interleaving mode can be started, where Linac beam will be switched from the thermionic cathode gun RG2 source, for the Storage Ring Top-Up mode operations, to the Photo cathode gun source to the LEA, for advanced accelerator technology and beam physics experiments, on a 2 minute cycle. Interleaving mode magnets LtP:B1, PtB:B1 and PtB:B2 will steer the beam to interleave after the Linac and Linac/PAR ACIS will not be effected as long as the following conditions are true:

- Linac/PAR ACIS in Beam Permit mode,
- Synchrotron ACIS in Beam Permit mode,
- RF Area ACIS in Beam Permit mode,
- Storage ring ACIS in Beam Permit mode,
- LEA ACIS in Beam Permit mode

In order to switch the source for the Linac beam from the thermionic RF gun, (RG2) to the Photo cathode (PC) gun the RG2 α magnet will need to ramp up and down. Waveguide switches and gate valves, monitored by ACIS, will indicate the PC gun. rf source is L3 and the RG2 gun rf source is L1. The Linac/PAR ACIS will monitor RG2 α magnet current ramping, during Interleaving mode, and perform the following logic to provide enable signals for L3 rf systems triggers (LLRF gate and modulator trigger) and RG2 kicker magnet trigger.

- When the RG2 α magnet current is below a predetermined low value, the PC gun beam is sent into the linac, thus ACIS will enable the L3 rf system triggers and disable the RG2 kicker magnet trigger.
- When the RG2 α magnet current is between a predetermined low and high values the ACIS will disable both the RG2 kicker magnet trigger and the L3 rf system triggers.
- When the RG2 α magnet current is above a predetermined high value, the RG2 gun beam is sent into the linac, thus ACIS will enable the RG2 kicker magnet trigger and disable the L3 rf system triggers.

3.11.1.4.2 Conditions for LEA Operation

LEA Beam Operations Enabled: For the LEA ACIS to reach "Beam Permit Mode" and allow beam to be introduced to the LEA tunnel, the following conditions must be met:

- LEA area search has been completed,
- both maze doors to the LEA tunnel are closed,
- all controlled access keys are in their keybank,
- all beam shutdown stations are armed, (i.e., the BSS pushbutton is pulled out).

At this point the two controlled bending magnets can be energized, the BTL radiation stop , located in the synchrotron alcove can be opened. Of course, both the linac/PAR and synchrotron ACISs must also be in Beam Permit Mode for the intersystem partitions (i.e. the LTL radiation stop) to be opened and beam to be introduced to the LEA tunnel.

Area Access (ACIS authorized access or controlled access): To gain access to the LEA tunnel, the two bending magnets used to transport beam to the LEA are disabled and the BTL closed. The LEA is then taken out of Beam Permit mode. Note: Normal operating procedures dictate that these magnets be turned off and beam stop closed first by non-ACIS controls.

Operation Termination: If either of the two access doors to the LEA tunnel are breached, or a beam shutdown button is pressed, the two controlled bending magnets will be disabled and the LEA beamline radiation stop inserted by the removal of its permissive signals. If the LEA end-station radiation monitor indicates a high alarm, the linac/PAR ACIS will disable all electron guns and the beam stops under linac/ PAR ACIS control will be closed.

A test mode is provided to allow operation of one of the two controlled bending magnets while the LEA ACIS is in Controlled Access Mode (the tunnel may be occupied under controlled conditions). Only one magnet is allowed to operate and the LEA beamline stop must be inserted. Since the magnets are located in the synchrotron tunnel, the synchrotron must be in Controlled Access, Beam Permit Pending or Beam Permit Mode for the magnet to be energized.

3.11.1.4.3 Conditions for Synchrotron Operations

Synchrotron Beam Operation Enabled: For the synchrotron ACIS to reach "Beam Permit Mode" and to allow their Controlled equipment to be energized, the following conditions must be met:

- synchrotron area search has been completed,

- storage ring zone-F area search has been completed and the zone-F ACIS is in Beam Permit Mode,
- both doors to synchrotron tunnel are closed,
- all controlled access keys are in their keybanks,
- all beam shutdown stations are armed (i.e., the BSS pushbutton is pulled out),
- all radiation monitors indicate normal levels,

AND

- HET first bending magnet on, second bending magnet (pair) off, and the two HET radiation stops are CLOSED (i.e., beam is being sent to the beam dump),

OR

- HET first bending magnet off, second bending magnet (pair) on, and the two HET radiation stops are OPEN (i.e., beam is to be routed to the storage ring injection area) and storage ring ACIS is in a Beam Permit condition.

Area Access (ACIS authorized access or controlled access): To gain access to the synchrotron tunnel enclosure, the synchrotron Beam Permit is removed. If not already off, the synchrotron systems listed in the previous section are disabled by this action. Note: Normal operating procedures dictate that these systems be turned off first by non- ACIS controls.

Operation Termination: If either access door to the synchrotron tunnel enclosure is breached, the zone-F ACIS drops out of Beam Permit Mode, or a beam shutdown button is pressed, the redundant protection terminates the operation in the area by disabling the synchrotron controlled equipment. If either of the two the LET beam stops are open, this termination action will propagate to the linac/PAR ACIS and all linac- and PAR-controlled equipment will be disabled and both beam stops closed. If a radiation monitor indicates a high alarm during operation, only the electron guns will be disabled and the two beam stops closed.

A test mode is provided to allow the synchrotron main dipole to operate while the ACIS is in Controlled Access Mode (the tunnel may be occupied under controlled conditions).

3.11.1.4.4 Conditions for Storage Ring Operations

RF Area Beam Operation Enabled: Because the RF Area can provide rf energy to the storage ring, synchrotron and RF Test Stand conditions for its controlled

equipment to be allowed to be energized vary depending on the mode of operation and the position of waveguide switches.

To elevate the RF Area ACIS to “Beam Permit Mode” and to energize the RF Area’s Controlled Equipment, the following conditions must be met:

- maze door to the Zone F tunnel is closed,
- both front end ratchet doors associated with the Zone F are closed,
- both zone-isolation gates are closed,
- all controlled access keys are in their keybanks
- all beam shutdown stations are armed (i.e., the BSS pushbutton is pulled out),
- RF Area (Zone F) search has been completed,
- in-tunnel warnings issued and completed,
- all radiation monitors indicate normal levels.

3.11.1.4.4.1 Normal Injection into the Storage Ring

To inject beam into the storage ring the following conditions must be met:

- synchrotron in Beam Permit Mode,
- RF Area in Beam Permit Mode,
- storage ring in Beam Permit Mode,
- RF Area not in Dipole Test Mode,
- RF Area not in RF Conditioning Mode,
- all synchrotron, RF Area, and storage ring radiation monitors indicate normal levels,
- HET first bending magnet OFF,
- HET second bending magnet pair ON, and
- BtS double radiation stop OPEN.

3.11.1.4.4.2 Synchrotron Beam to the HET Beam Dump

Beam operations are supported in the synchrotron but without injection into the storage ring. This mode requires:

- synchrotron in Beam Permit Mode,
- RF Area in Beam Permit Mode,
- RF Area not in Dipole Test Mode,
- RF Area not in RF Conditioning Mode,
- all synchrotron and RF Area radiation monitors indicate normal levels,
- HET first bending magnet ON and
- HET second bending magnet pair OFF.

3.11.1.4.4.3 Using RF3 to Backup the Synchrotron's RF5

Normally RF3 provides rf energy to cavities in the storage ring's Zone F. This backup mode allows RF3 to replace the synchrotron's RF5 if RF5 is out of service. For RF3 to operate to the synchrotron its output is directed to the synchrotron through a series of waveguide switches. In the normal configuration the synchrotron and RF Area rf systems are isolated via two closed waveguide shutters. In RF3 backup mode these shutters are open and, for rf protection, the synchrotron and Zone F are treated as one Controlled Area. Since rf energy from RF2 and RF3 systems go through a common power combiner, rf energy from RF2 could be directed into the RF3 waveguide, therefore the conditions that enable RF3 must also apply for RF2.

To enable RF Area RF3 kylstron system to be enabled to drive the synchrotron rf cavities, the following conditions must be met:

- a synchrotron RF Select key switch must be switched from "RF5" to "RF3",
- waveguide shutters 3 &4 are OPEN,
- synchrotron is in Beam Permit Mode,
- RF Area is in Beam Permit Mode,
- RF Area not in Dipole Test Mode and
- all radiation monitors indicate normal levels.

3.11.1.4.4.4 RF Conditioning Mode

The RF Area RF systems may be enabled for conditioning under limited conditions:

- RF Area in Beam Permit Mode,
- Sector 39 View Screen inserted and
- RF Area not in Dipole Test Mode.

3.11.1.4.4.5 RF Test Stand (RFTS) Operation

A special-purpose shielded room is provided for the testing of rf cavities and cavity-related components for the synchrotron and storage ring systems. This room is located in proximity to RF1 in Building 420. Rf from the nearby RF1 klystron system can be directed to Zone F or the RF Test Stand through waveguide switches. While utilizing the RF1 high voltage power supply, rf from a second klystron, RFTS-1, can also be directed to the RF Test Stand through a waveguide switch. To protect the room and allow personnel access, two waveguide shutters, located downstream of these waveguide switches, are closed. These shutters are monitored by the two PLC interlock chains of the RF Area ACIS. Since rf energy from RF1 and RF4 systems go through a common power combiner, rf energy from RF4 could be directed into the RF Test Stand; therefore, the conditions that enable RF1 must also apply for RF4.

The rf test stand ACIS is implemented in the same PLCs used for the RF Area ACIS, and the two implementations share control over the RF1 and RF4 klystron systems. All other features of the rf test stand ACIS are the same as with all other ACIS implementations with the exception of a Controlled Access Mode. These include magnetic door locks, rf shutdown and search verification stations, warning lights and alarms, a local control panel, and two radiation monitors. The warning period following a room search and preceding the permits given to RF1 is 20 seconds in duration due to the smaller area.

The RF1 klystron system is enabled to deliver rf energy into the RFTS if the following conditions exist:

- RF Area in Beam Permit Mode,
- RFTS in Beam Permit Mode,
- no Radiation Monitor trips in Storage Ring, RF Area or RFTS,
- RF Area not in Dipole Test Mode and
- storage ring is Secure,

OR

- in RF Conditioning Mode **AND** Sector 39 Viewscreen inserted.

3.11.1.4.4.6 Top-Up Mode Operation

Unlike normal injection mode where the ring is filled from "zero" current, which requires all beam line shutters be closed, top-up mode provides for continuous injection of beam into the storage ring to maintain a constant beam current while the beam line shutters are open. It requires the dipole power supply to be operating at a level sufficient to maintain 6-GeV beam energy and a minimum beam current circulating in the ring. Top-up mode is allowed if:

- RF Area ACIS in Beam Permit Mode,
- storage ring ACIS in Beam Permit Mode,
- dipole power supply voltage at a level to support a minimum of 6-GeV beam energy,
- dipole power supply current at a level to support a minimum of 6-GeV beam energy,
- two independent beam current monitors located in two separate sections are above a minimun current level, and
- all RF Area and storage ring radiation monitors are normal.

If either of the dipole power supply sensors or beam current sensors fall below their threshold, the ACIS immediately generates a Gun Inhibit that turns off the linac-beam-producing gun and closes the LET Beam Stoppers to cease injection.

3.11.1.4.5 Conditions for Storage Ring Operations

Storage Ring Beam Operation Enabled: For the storage ring ACIS to reach Beam Permit Mode, the following conditions must be met:

- all five maze doors to the storage ring tunnel (for zones A-E) are closed,
- all 70 ratchet doors to the storage ring tunnel front ends are closed,
- all five super doors to the storage ring are closed,
- all controlled access keys are in their keybanks,
- all beam shutdown stations are armed (i.e., the BSS pushbutton is pulled out),

- Storage ring area search has been completed for zones A-E,
- RF Area (Zone F) ACIS is in Beam Permit Mode,
- all radiation monitors indicate normal levels.

ACIS will allow the APS storage ring to be operated in top-up mode" (wherein any of the monitored shutters can be open) for any beamline if the following conditions are met:

- The filling mode switch (which allows administrative control) is set to Top-Up Mode.
- The two stored current monitors both indicate that the stored beam current is above a specific minimum current.
- The storage ring main dipole current and voltage are monitored by both ACIS PLC chains using two different methods to insure that the stored beam is at an energy greater than 6 GeV.

If while in this mode the stored beam current or the dipole current or voltage drops below the specific minimum, the ACIS will cause further injection to be inhibited . Normal filling can resume once all beamline front end shutters are again closed.

Area Access (ACIS authorized access or controlled access): To gain access to the storage ring tunnel enclosure, the storage ring Beam Permit is removed. If not already off, the storage ring main dipole and rf systems are disabled by this action. Note: Normal operating procedures dictate that these systems be turned off first by non-ACIS controls.

Operation Termination: If any maze access door, ratchet door, or super door to the storage ring tunnel enclosure is breached, or a beam shutdown button is pressed, the redundant protection terminates the operation in the area by disabling all storage ring controlled systems located in the RF Area and controlled by the RF Area ACIS. If a radiation monitor indicates a high alarm during filling, the electron guns and the storage ring rf will be disabled. If a radiation monitor indicates a high alarm during stored beam operation, injection of beam into the storage ring will be terminated, and after a pre-programmed delay the RF Area rf systems will be disabled.

A test mode is provided to allow the storage ring main dipole power supply to operate while the storage ring ACIS is in Controlled Access Mode (the tunnel may be occupied under controlled conditions) only if zone-F rf equipment is disabled and a beam-interrupting screen is inserted (i.e., Sector 39 View Screen). The storage ring rf system is never allowed to operate unless the zone-F area has been searched and secured, i.e., personnel access is not allowed.

3.11.1.4.6 Securing the Linac/PAR, LEA, Synchrotron, and Storage Ring Areas

Before beam or rf power can be introduced into any accelerator tunnel enclosure, the following conditions must be met:

- a successful search procedure of the area has been completed,

AND

- audible and visual warnings have been given, indicating that ACIS Controlled Equipment may be enabled with subsequent beam production.

The search procedure is a sweep of the area, during which the search team verifies that no one remains inside. The search team actuates search/verification buttons on the BSSs in a specified sequence as the search proceeds. These buttons are used to ensure that a systematic sequence is observed and that all areas have been inspected. In this way, personnel in the searched area may leave through any door ahead of the search team, but if a secured door behind the search team is opened, the search must begin again. During the search, a search indicator is displayed at each BSS station in the area to notify occupants that the search is underway.

The search process is aborted by the ACIS if one of the search/verification buttons is pressed out of order (indicating that a BSS was missed or repeated), or if the process takes too long (indicating that there has been a deviation from the search procedure). The search will also be aborted if a (locked) maze entry door behind the search team is opened, or if a beam shutdown button is pressed inside or outside the tunnel.

At the completion of the search, the search team leaves the area and secures the last door. When the last searchb utton is pressed, the ACIS automatically escalates from its tunnel search mode to Controlled Access Mode. The control room operator may now activate the warning interval which consists of an obtrusive audible warning lasting for one minute; at the same time, a series of flashing beacons inside the tunnel area begins to operate. These beacons indicate that a beam permit condition is pending and also serve to indicate where the BSS buttons are located inside the tunnel enclosure. The beam shutdown buttons can terminate operation and are located every 30 meters or less within the tunnel areas so that they can be reached quickly. At the end of the warning interval, and when all controlled access keys are in place, equipment operation is possible with the final transition to a beam permit condition executed by the control room operator. Flashing beacons will remain active for 15 minutes after the end of the warning interval.

The storage ring is divided into six zones for the purpose of searching to a Controlled Access state. As stated above, RF Area (Zone F) is a standalone ACIS and can be secured and operated separately from the other five zones. In the case of the five-zone storage ring ACIS, each zone can be searched to a Controlled Access state individually, and if a perimeter violation occurs, only the affected zone will drop to

Authorized Access Mode. In this way the entire storage ring tunnel need not be searched, only the affected zone.

3.11.1.4.7 Controlled Access Mode

The ACIS implementations provide a mode of operation which will allow access to t
The ACIS implementations provide a mode of operation which will allow access to the accelerator tunnels in a safe manner while maintaining control over the tunnel security. This mode is called Controlled Access Mode and, as the name implies, provides means to control access to a secured controlled area with a combination of administrative and remote control procedures. In Controlled Access Mode all Controlled Equipment is disabled except those operating in test mode. A person requiring access to the tunnel will communicate with the control room operator from the maze entry door, requesting access permission. The control room operator will record the person's name, door location, the time, Controlled Access key number, and may also check to insure that the person is on an "allowed access" list which implies the proper level of training. The door will then be unlocked remotely by the control room operator. If the door is open and the control room operator inadvertently removes the door release, the ACIS will automatically drop to Authorized Access Mode, and a new tunnel search is required. All actions described here are monitored in the control room by closed circuit TV to verify proper adherence to procedure.

As the personnel allowed access into the tunnel in Controlled Access Mode prepare to exit from the tunnel, they again communicate with the control room operator, are logged out with the time recorded, and the door again unlocked remotely. The controlled access key(s) obtained on entry are then returned to their proper key bank, and when all personnel have logged out of the tunnel, a transition to a beam permit condition is possible. This transition will include the one-minute warning interval prior to the final transition. As described above, a beam permit condition cannot be achieved unless all the controlled access keys are present in their proper keybanks.

3.11.1.4.8 Equipment Test Mode

The ACIS implementation provides a means to operate selected systems, normally disabled to prevent the generation of prompt radiation, in a test mode while in a Controlled Access configuration. The reason for this provision is to allow access to the in-tunnel system components under powered-up conditions. In addition, the message portion of the BSS stations display "TEST" to indicate that this condition is being allowed and the maze door ACIS status displays indicate that a controlled system is on.

In each case, the systems allowed to operate in test mode constitute a subset of those needed to generate, retain, or accelerate beam. Some ACIS-controlled systems are not provided with this functionality and can only be operated in Beam Permit Mode. Examples are the linac, synchrotron, and storage ring rf systems. Test mode keys are

required to operate the systems of each accelerator, one each for the linac, PAR, synchrotron, and storage ring. Each test mode system has a keyswitch provided, such that with a single test mode key, only one system can be operated in test mode at a time. These keyswitches are located at selected maze doors of each accelerator, with readouts provided at all applicable maze doors and at the control room location. lists the equipment operable in test mode for each accelerator.

If a Beam Shutdown button is depressed while in Controlled Access Mode, any equipment operating in Equipment Test Mode is disabled and the system (or storage ring zone) brought down to Authorized Access Mode.

3.11.1.4.9 ACIS Operational Key Control

Several keys are involved in the operation of the ACIS. The procurement, storage, and replacement of these keys is strictly controlled by an administrative procedure. See details in the "ACIS Key Replacement" procedure #210603-00028 (ANL onlineE). A detailed description of all ACIS keys can be found in the document "ACIS Key Inventory" (ANL onlineF).

3.11.1.5 Injector Test Stand (ITS)

The Injector Test Stand comprises two special-purpose rooms that are located adjacent to the electron gun area of the linac/PAR enclosure in Building 411. One is the rf gun test room for testing the thermionic and photocathode rf electron guns and other rf systems, and the other is the laser room to house the laser system used to operate or test a photocathode rf gun. The following subsections describe the characteristics of the interlock systems for these rooms and their relationship to the ACIS.

3.11.1.5.1 Injector Test Stand (ITS) Interlocks

Since the Injector Test Stand has linac rf waveguide plumbed to it, this room cannot be occupied when rf power is applied to a gun under test. For the room to be occupied during linac operation, dual redundant means in the form of two waveguide switches are provided to disable or disconnect the rf energy to this area. If the room security is breached during rf operation, the linac klystron systems involved will be disabled. A simple search, i.e., traveling the extent of the room, is required to transition this area to a secure state. The door connecting this room and the laser room is equipped with a magnetic lock and dual redundant door monitoring. Two radiation monitors, one inside the rf gun test room (ignored if the room is in beam permit) and one in the laser room, warn occupants of radiation hazards from the rf gun test room and the linac. The warning period preceding the rf permit and following a room search is 20 seconds in duration due to the smaller area.

3.11.1.5.2 Laser Room Interlocks

The laser room itself is classified as a laser-controlled area (LCA), and its interlock system conforms to Argonne standards corresponding to such areas. A shutter/gate valve prevents the laser beam from entering the linac/PAR enclosure when it is not required for photocathode triggering or when the linac/PAR enclosure is not in an appropriate level of security. The linac/PAR ACIS must be in a level of security of Controlled Access (for laser alignment with shields off) or Beam Permit for the light shutter to be allowed to open.

The laser room's only entrance is an interlocked set of two doors. The outer door is unlocked by a CardKey system that limits entry to those personnel who are current with laser training. An indicator light panel on the outside of this door indicates when the laser is in operation in either of three modes: DANGER (ON) – WARNING (Powered up) – SAFE (Powered down). To maintain laser operation, the outer door must be closed before the inner door is opened. The inner door must not be open more than 15 seconds to ensure continued operation. Warning devices are provided to warn those in the laser room that the doors are being opened.

3.11.1.6 ACIS Testing

System testing provides the single most important contribution to safe operation. Since few failures arise spontaneously during operation, a rigorous testing program must be developed that includes all the protective elements of the system and verifies their function following any maintenance, addition of new components, or software changes. The test verifies that the system works as expected and ensures that improperly executed operations do not lead to unsafe conditions. Testing of the system is performed before the system is placed in service, after any work is done on the system, and at periodic intervals of at least once every twelve months consistent with DOE Order O 420.2A (DOE 2001a). A grace period of one month is allowed if made necessary by APS scheduling. The ACIS validation procedures for all ACIS systems are under configuration control using ICMS.

3.11.1.7 ACIS Configuration Control

In accordance with DOE O 420.2A (DOE 2001a) Section 13, any change in the ACIS functional configuration or any related procedure must be approved by an APS-level committee, independent of the group within AES responsible for the ACIS, although it may include members of that group. The ACIS functional configuration extends to the ACIS-related linac, PAR, ITS, LEA, synchrotron, RF Area, and storage ring equipment interlock implementation. The base level ACIS configuration, from which changes are considered, is that design reviewed by the 1992 technical review panel (ANL 1992a).

All but minor equipment changes and all functional changes must be presented and justified before any implementation effort is undertaken. Testing procedures must

also be reviewed, approved, and demonstrated before the new configuration can be approved for operation. Any such change to the PLC software will, of course, trigger a complete system verification test process.

In the case of an interlock bypass, the DOE-mandated procedure is followed, in which an equivalent or safer procedure or alternate equipment is put in place. The proposed bypassing requires both APS Operations and ACIS engineering review and approval, and the interlock system is tested with the bypass in place and again after it has been removed.

3.11.1.8 Personnel Access Policy

If access is to be allowed into any of the accelerator enclosures after operation with beam, precautions must be taken to ensure ALARA exposures to radiation and, if necessary, restrict access to any areas of significant residual radioactivity. Additionally, electrical hazards are addressed using LOTO or working-energized procedures. The operational procedures depend on the type of access established using the ACIS.

3.11.1.8.1 Authorized Access Mode

This is an access mode used when the tunnel is open for work, although locked doors can be provided under administrative control. The Accelerator Systems Administrative Safety Envelope requires the existence and adherence to written radiation survey procedures. These procedures dictate that after the conclusion of any operations with radiation, and before the establishment of an Authorized Mode of access, HP technicians will survey the tunnel to verify that the very high radiation fields have been terminated.

All personnel performing work in the tunnels in this mode are required to be protected using LOTO. These procedures and equipment allow each separate tunnel—linac/PAR, synchrotron, LEA, and each of the six storage ring zones— to be LOTO'd individually and, in the case of the storage ring, Zones A through E, collectively.

3.11.1.8.2 Controlled Access Mode

A controlled access will normally be made by only a few individuals to inspect particular pieces of hardware, investigate abnormal events, or perform routine walkthroughs. If beam operations have been underway in the area to be entered, those entering are preceded by an HP technician who will carry survey devices and monitor for radiation fields in the vicinity of interest. LOTO-less access is allowed using prescriptive written procedures developed for specific purposes. With the exception of the PAR rf systems, all rf systems must always be LOTO'd.

3.11.2 Personnel Safety System

3.11.2.1 Introduction

The APS has the potential of operating with up to 70 beamlines. Each beamline includes multiple shielded enclosures containing optics and experimental equipment. Personnel access into these enclosures will be controlled during beamline operation. The APS Personnel Safety System (PSS) is the engineered safety system for each beamline for controlling access into the enclosures, ensuring that access is allowed only under safe conditions (i.e., beam is off in the enclosure), and to disable storage ring operation if improper access is gained or a PSS system fault is detected that could potentially endanger personnel.

The PSS for each beamline interfaces directly with the accelerators Access Control and Interlock System (ACIS) for disabling storage-ring operation. Each PSS is totally isolated from the PSS of any other beamline to prevent a fault from one beamline affecting the operation of other beamlines.

Each PSS is designed by APS/AES staff to meet the requirements of the beamline after review and concurrence by the Beamline Safety Design Review Steering Committee. The APS/AES staff are also responsible for the installation, verification, validation, and maintenance of the system. Although beamline designs require some flexibility in possible modes of operation, types of devices to be interlocked, and other operational requirements, the basic configuration and control aspects remain the same. Custom control panels are designed to incorporate any special features. The system documentation, test procedures, and training include all basic as well as specialized equipment and operating modes.

The PSS is designed to comply with the following:

- DOE Order O 420.2A, "Safety of Accelerator Facilities" (DOE 2001a).
- "APS Preliminary Safety Analysis Report" (ANL 1990).
- SLAC 327, "Health Physics Manual of Good Practices for Accelerator Facilities" (SLAC 1988).
- NBS Handbook 107, "Radiological Safety in the Design and Operation of Particle Accelerators," ANSI N43.1 (NBS 1979).
- NCRP Report No. 88, "Radiation Alarms and Access Control Systems" (NCRP 1986)

Among the more important aspects of conformance, the PSS satisfies the following requirements:

See Addendum 1

- The system is designed to be fail safe, so common failures (e.g., open wires) leave the system in a safe, beam-off state.
- The designs incorporate redundant protection, ensuring that no single component or subsystem failure leaves the system in an unsafe, beam-on condition.
- Provisions for testing are included, so the proper component and system functions may be completely validated.
- Access and egress controls are incorporated so that personnel are never exposed to x-ray radiation. These include emergency shut-off devices, status signs, search boxes, and emergency exit mechanisms.
- A document control system is incorporated for keeping documentation complete, accurate, and current.
- A configuration management system protects the software against unauthorized and inadvertent modification. Critical devices are clearly labeled to note that tampering is strictly forbidden.
- User training for proper system operation is provided and users are made aware of the consequences of tampering or improper use of the PSS.

3.11.2.2 Beamline Personnel Safety System (PSS) Description

3.11.2.2.1 Overview

Each beamline PSS employs two independent Emergency ShutdownESD chains, referred to below as Chain A and Chain B, providing safety system redundancy. The PSS incorporates the following equipment:

- Programmable Logic Controllers (PLCs) installed in each chain to perform the system's decision logic.
- PLC input/output (I/O) modules which interface the PLCs with the switches, lights, locks, relays, and other devices used by the PSS.
- Centralized Uninterruptible power supplies (UPSs), to protect against short-term AC power loss.
- Control panels and status displays.
- Station door hardware (status switches, locking mechanisms).
- Station search-and-secure hardware (search buttons, visible and audible warning indicators, emergency shutdown buttons).

see Addendum 1

- Interfaces to beam shutdown safety devices, such as front-end or beamline safety shutters and photon shutters (position-indicating switches and position-controlling solenoids).

- Interfaces to the ACIS, the Front-End Equipment Protection System (FEEPS), the Beamline Equipment Protection System (BLEPS), and the Experlmental Physics and Industrial Control System (EPICS)

- Dedicated equipment racks, conduit, cable trays, and cables.

The probability of a common cause failure is reduced by using different programmers to develop the software for each chain.

A programming key is required to program the PLC or to operate the PLC in a non-normal mode and once this key is removed from the PLC, the PSS program cannot be modified by any external means.

Each PLC system has a unique hardwired address and a PLC generated checksum. The hardwired address associates a crate with a particular beamline. During software execution, one of its regular tasks is to verify, via the system ID number, that it is operating in the proper beamline. The system PLC address insures that the software written for another beamline is not installed in a crate for which it was not intended. The checksum is constantly monitored and should the originally computed checksum not equal the last computed checksum a shutter removing fault will be generated.

A watchdog timer on each PLC allows monitoring of cessation of operation. This software settable timer provides two means to detect such a failure. The first is a timer utility: if it times out, all PLC outputs are turned off. Communication with all remote I/O modules is also stopped, and this action results in those modules outputs being turned off as well. Second, an on-board hardware verification, which checks the integrity of the data and address busses, is executed periodically. A detected fault causes all local and remote outputs to be de-energized. These outputs control critical devices and the permits to the ACIS. The fault will abort the stored beam and close all safety shutters.

In addition, the PSS implementations have been provided with opposing watchdog signals to the opposite chain, which require periodic stimulation. If either chain is not triggered periodically by the opposite chain, it will close all shutters.

The PLCs interface for the ACIS, FEEPS, BLEPS, and front-end components for both chains are located in locked relay racks and are inaccessible to the users.

Equipment to which the user needs access, such as door controls, shutter controls, and mode controls, are located in equipment cabinets located on or near the experiment stations. These cabinets also contain the I/O modules for the PSS

see Addendum 1

equipment at the station location. The equipment cabinets are locked to prevent uncontrolled access to these I/O modules and the PSS wiring.

APS experimental station control panels provide:

- a logical visual indication of the beamline status
- beamline safety shutter controls
- mechanisms to administratively place stations in a safe accessable state

3.11.2.2.2 Station Control Panel

A station control panel is used to open and close safety shutters, gain safe access to the experimental station, and provide visible feedback regarding the states of the accelerator permits, other experimental stations, and the shutters. Figure 3.35 shows a typical hardwired panel for two stations with two sets of safety shutter controls. Primary panel features are described below.

The status display consists of a chain of LED indicators that are laid out in a manner consistent with the beamline layout. Lamps are green if the related devices or systems permit the beam to be propagated down the beamline and are red if configured to stop the beam. The beamline safety-shutter and station-enable controls are located on the panel next to the appropriate indicators.

The Station APS Enable key is used by the APS facility to administratively enable or disable a station for User control. This is the key used by the Floor Coordinator to disable a beamline or section of a beamline due to safety, operational, or other concerns.

The Station User key(s) allows a user to disable the shutter control for a station and allows administrative control by the user on the operation of a beamline or section of the beamline.

see Addendum 1

Figure 3.35 Typical Station Control Panel

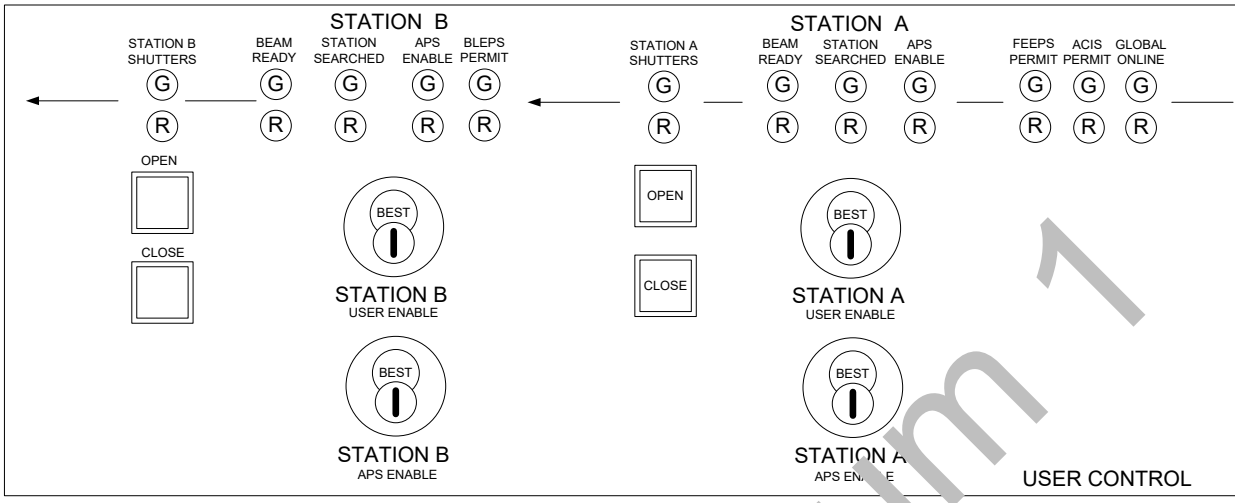

More advanced versions of the PSS may incorporate a third PLC (Chain C) and acts as the interface to external systems. This third PLC provides command/control functionality dependent on the permissives of the two safety-enforcement PLC chains. This third chain allows greater flexibility in the design of a PSS as well as better communication with the user. Control panels for this PSS will incorporate "soft," that is, programmable, displays with touch-sensitive surfaces for user selections. In the descriptions which follow, the visible indicator devices are replaced by display panel objects, but the key switches will remain in place as described.

3.11.2.2.3 Station Door Control Panel (pneumatic doors only)

This panel provides pushbuttons with visual indicators for releasing the magnetic door locks and opening the door. The buttons are inactive if the proper access conditions have not been established. The number of these panels at each beamline is determined by the position of the stations, the number of doors at each station, and other design requirements.

3.11.2.2.4 System Control Panel

Each beamline requires a system control panel. This panel is not used by the users. The system control panel provides the means to reset PSS faults. Several categories of faults have been determined, and each is reset by a key. The levels are as follows and differ depending on the version installed at a specific beamline:

3.11.2.2.5 Faults and Trips

- Faults – A fault is generated when an internally inconsistent condition is detected, i.e., a shutter being sensed as opened and closed at the same time, a shutter that fails to close when its permit is removed, a shutter that opens without a permit, etc. The Faults are broken down into Storage Ring Permit Removing Faults and Shutter Permit Removing Faults. A fault will require someone from

see Addendum 1

the SI Group, User Operations Group (Floor Coordinators), or the Accelerator Operations group investigate the fault and perform a Reset before beamline operations can be restored.

- Trips - A trip is generated when a condition is detected that requires the removal of APS beam from a given beamline/station, i.e., a door is open to a station with beam present, a crash button is pressed in a station with beam present, etc. Just like the Faults the Trips are further broken down by Storage Ring Permit Removing Trips and Shutter Permit Removing Trips. A trip will require someone from the SI Group, User Operations Group, or the Accelerator Operations group investigate the trip and preform a Reset before beamline operations can be restored

- Warnings – A warning is an indication that an improper or undesirable condition exists, but does not present any risk of beam radiation exposure to personnel. All warnings are self-resetting once the condition has cleared (returned to normal), no manual reset is required.

NOTE: Faults and trips react differently depending on the severity of the event as described below

- Storage Ring Permit Removing Faults & Trips

  These represent situations where the beam must be removed as quickly as possible, so waiting for a shutter to close is not acceptable. There are two situations that call for the beam to be removed as quickly as possible are; the possibility of personnel exposure to radiation or the possibility of a critical device being damaged

- Shutter Permit Removing Faults & Trips

  These represent situations there is no immediate danger to personnel, however there is a problem with the position sensing of a shutter, or the shutter has malfunction in some way. Therefore all shutter permits will be removed, forcing all shutters to close, before the problem can escalate to the level requiring the removal of the storage ring permit

see Addendum 1

3.11.2.2.6 Experimental Station Hardware

The experimental station doors may be operated pneumatically or manually . However, the PSS hardware for the door position monitoring and locking is the same in all cases.

The inside of the station contains one or more emergency shutdown switches (“crash buttons”) that inhibit storage-ring operation when depressed if the shutters are open. The number of emergency shutdown switches is determined by the SI Group and

then reviewed by the Beamline Safety Design Review Steering Committee during the design review process and is based on the design of the enclosure and the equipment it will contain to ensure easy accessibility from any location within the enclosure.

Emergency entrance and egress mechanisms are located on the inside and outside of the station door. The PSS door hardware does not interfere with the access/egress mechanism operation.

The inside of the station contains one or more search buttons and visual and audible indicators of a search in progress. The number of search buttons and locations is determined by the SI Group and then reviewed by the Beamline Safety Design Review Steering Committee during the design review process and is based on the design of the enclosure and the equipment it will contain. The search buttons must be depressed in the correct sequence, and the search must be completed and the door closed within a predetermined interval for the search to be considered successful by the PSS logic. At the completion of a successful search, the safety shutter buttons are activated if the other interlock conditions (keys, mode control, etc.) are satisfied. The PSS logic diagram showing the conditions that need to be satisfied for opening the safety shutters is shown in Figure 3.36.

Figure 3.36 Typical Shutter Control Logic

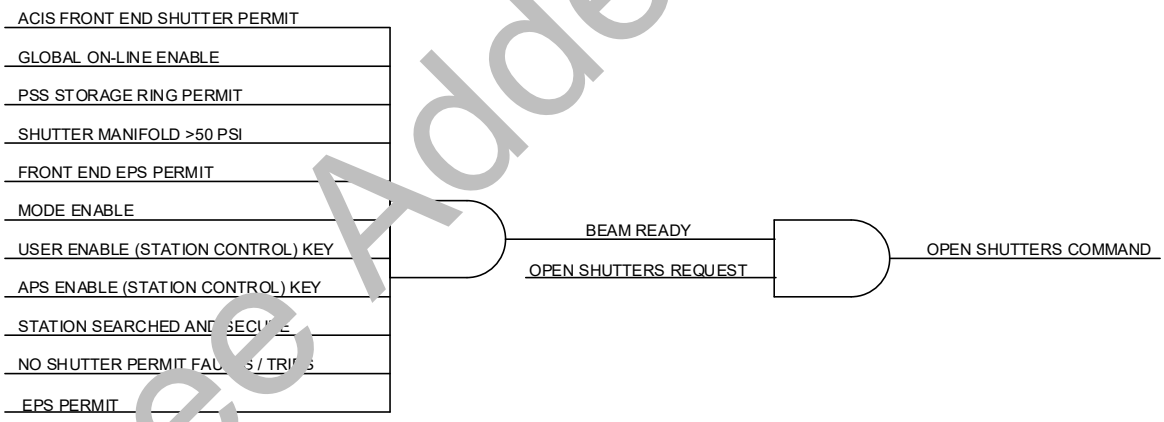

see Addendum 1

3.11.2.3 Storage Ring ACIS and PSS Interface

All beamlines have a Global on-line/off-line keyswitch located in a junction box associated with each storage-ring sector and located atop the storage ring shielding enclosure. The junction box is the interface point for the two PSS systems associated with each sector and the ACIS system. Because the enclosure contains circuitry maintained by the ACIS staff, access is limited to the Safety Interlocks (SI) Group, Accelerator Operations Group (AOP) , and the User ESH Support (UES) Group.

Inside the junction box are located the on-line/off-line keyswitches, one for each of the two beamlines associated with the sector. When the keyswitch for a beamline is set to off-line, its safety shutters and associated photon shutter are prevented from opening and the PSS beam-dump signal is ignored. When the keyswitch is set to on-line, the shutters are allowed to be opened under PSS control and the ACIS monitors and reacts to the beam-dump signal from the PSS, if ACIS detects the FES not closed. The keyswitches are under the control of the AOP , and the UES Group, their use is strictly governed by administrative procedures. The keyswitch is set off-line until the beamline has been authorized to begin commissioning/operation. The keyswitch is also set off-line when the PSS is undergoing maintenance or testing during storage-ring operation.

3.11.2.4 PSS Testing and Configuration Control

3.11.2.4.1 PSS Testing Overview

The PSS implementation provides a means to operate the system in a test mode with the critical front-end safety and photon shutters disabled in the closed position. This is referred to as the Global Off-Line State and allows main ring operations to continue while the beamline is being tested.

System testing provides the single most important contribution to safe operation. Since few failures arise during operation, a rigorous testing program must be developed that includes all the protective elements of the system. Further, the program must also verify the system's integrity following any maintenance, addition of new components, or software changes.

The test verifies that the PSS operates as designed. Testing of the system is performed before the system is placed in service, after any repair and at periodic intervals of at least every twelve months consistent with DOE Order O 420.2A (DOE 2001a). A grace period of one month is allowed if made necessary by APS scheduling. The PSS test procedures are under document control.

3.11.2.4.2 PSS Configuration Control

Any change in the PSS operational or functional configuration and any related procedure must be approved by acommittee independent of the group within AES responsible for PSS although it may include members of that group. All proposed changes must be presented and justified before any implementation effort is undertaken. The detail of the review and the level of approval are commensurate with the degree of hazard involved.

Testing procedures for the modified system are reviewed, approved, and validated before the new configuration is approved for operation. Any change to the PLC software triggers a system validation process

see Addendum 1

In the case of an identical component replacement, a formal review is not necessary. However, the functionality of the component must be checked and validated by a PSS Responsible Engineer or his designate in writing before the system can be reactivated.

3.11.2.4.3 PSS Documentation

The following documentation is prepared and maintained by the group responsible for the PSS Systems :

- A description of the document control and review system for keeping documentation complete, accurate, and current
- A written functional description of PSS
- The physical and electrical configuration of each PSS
- An auditable record of PSS test results
- Records of management review and approval of the PSS
- PSS key management and replacement records
- Software requirements document and functional specifications
- Software acceptance and validation plans
- Software code files

3.12 Shielding Policy and Radiation Monitoring

Shielding incorporated into the design of the APS facility ensures that DOE ALARA objectives are met. This section describes the APS shielding policy, the calculated radiation dose levels attributable to accelerator system operation, and relevant monitoring activities.

3.12.1 Shielding Policy

Shielding for the APS is such that individual worker dose will be ALARA and less than 5 mSv/yr (500 mrem/yr). The APS shielding policy, which complies with the ALARA philosophy, is that the average work dose be below 2 mSv/yr (200 mrem/yr). Worker dose is monitored, and health physics personnel perform area surveys. For cases in which surveys indicate hourly dose rates higher than those allowed by the area designation and which may impact upon worker exposure, the cause of the radiation is investigated and additional local shielding provided, as needed, to reduce the radiation field to an acceptable level. Monitoring results are reviewed, and significant exposures, an unexpected increase in an individual's

see Addendum 1

exposure, or a trend of increasing exposure over a period of time trigger an investigation into the cause of the increase. Corrective measures are then taken as needed. Passive monitors are used throughout the facility to integrate dose in various areas. The results are analyzed for objectionable doses and trends of increased doses, and shielding in these areas reevaluated and improved, as appropriate.

The APS policy for on-site nonradiation workers in the vicinity of the APS facilities requires that the average nonradiation worker dose be below 1 mSv/yr (100 mrem/yr). In addition, the dose at the site boundary from all pathways is required to be below 0.1 mSv/yr (10 mrem/yr). Present estimates of the annual doses for these two categories of exposure indicate that these requirements are being met. For future modifications of the facility, the doses shall be reevaluated and additional shielding provided if required to meet the policy requirements.

Shielding guidelines and requirements have been developed and submitted to the Beamline Management to provide the basis for their beamline shielding designs (Ipe et al. 1993, Job et al. 1994). These requirements also form the basis for the ionizing radiation hazard analyses described in section 4.2. The Beamline Safety Design Review Steering Committee will evaluate all shielding designs that do not conform to the criteria presented in the above-referenced documentation.

The APS policy goal with respect to accidental exposures, exclusive of MCI conditions that are considered very low probability events, is to provide enough shielding to mitigate the dose consequence to <1 mSv (100 mrem) for any one occurrence. Potential accident situations have been analyzed and the dose consequences evaluated. Additional local shielding has been added at relevant potential loss points to achieve the policy goal. As stated above, when facility modifications are made, the hazard potential will be evaluated and additional shielding supplied as needed.

The APS policy for placement and maintenance of supplemental shielding requires formal configuration control. APS implementation of this policy includes:

- Maintenance of controlled documentation of shielding penetrations and supplemental shielding configuration,
- Independent verification of removal and replacement of shielding before operation of the accelerators and beamlines,
- Independent review of accelerator and Beamline Management beamline supplemental shielding design and calculations by experts in the APS
- Determination of efficacy of shielding by radiation measurements during normal operation as well as during controlled simulation of abnormal particle beam loss and worst-case photon beam loss scenarios,

see Addendum 1

- Administrative and hardware control of the operating envelope parameters and beamline operating limits to prevent operation of the accelerators or beamlines outside the verified capability of the shielding, and

- Ongoing review of the radiation environment and implementation of challenging but realistic ALARA goals by the APS divisions and Beamline managements.

Each supplementary shield is assigned an identification number that is affixed to the shield upon completion of installation.

A logbook is kept for all supplemental shields contained within and/or constituting the accelerator enclosure and is maintained by APS-UES personnel. A walkthrough is performed as part of the documented start-up procedures by APS-UES personnel or a designated individual to verify that the shield logbook reflects the actual supplemental shielding configuration and that the shielding is secured as described in the shield logbook.

All applicable beamline shielding design documentation and pertinent correspondence is maintained as part of the Beamline Safety Design Review Steering Committee files for each beamline. The Floor Coordinator responsible for the beamline maintains a logbook of the beamline shielding configuration. Regular walkthroughs are performed by APS-UES personnel or a designated individual to verify that the beamline shield logbook reflects the actual shielding configuration and that the required shielding security measures are in place.

The shielding guidance and requirements include the shielding provided by white beam stops and/or safety shutters located in the beamlines. Because of the high thermal loads, these devices require active cooling to maintain the shielding integrity. To ensure that the photon beam is shut off upon a decrease or loss of coolant in ID beamlines, each channel of the PSS is used to monitor a loss-of-cooling independently. These two channels, together with the independent monitoring (in most cases by the Equipment Protection System), provide two levels of protection.

3.12.2 Shielding Design Description

The shielding design for the APS accelerators was based on conservative assumptions. Consideration of several types of operations that involve normal beam loss mechanisms as well as certain abnormal beam loss scenarios were included in the shielding calculations. The scenarios applied were drawn from experiences and assumptions used at other accelerator and synchrotron radiation facilities throughout the world, as well as a walk-down of the APS injector components. The shielding calculations were based on well-known modeling formulas (Moe 1991) and accepted attenuation characteristics. Machine codes, such as EGS4, have been used to verify that the results from the modeling are appropriately conservative (Moe 1994).

see Addendum 1

The shielding requirements are satisfied by using standard and dense concrete for bulk shielding to ensure adequate attenuation of the bremsstrahlung, giant resonance neutrons, and the high-energy hadronic component produced in the particle-photon showers. The concrete is supplemented by earth berms, steel, lead, dense polyethylene, and castable shielding mixtures to reinforce the shielding at localized regions of high radiation (Moe 1991).

The shielding limits radiation doses to less than the DOE guidelines for both on-site and off-site exposure. The DOE Administrative Control Level for occupational exposure for DOE contractors is 20 mSv/yr (2 rem/yr), as stated in Article 211 of DOE/STD-1098-2008 CN1 (DOE 2008). Design guidelines for new facilities in 10 CFR 835.1002 (DOE 2009) require that the individual worker dose should be less than 5 mSv/yr (500 mrem/yr) and ALARA. The APS shielding is designed to meet or exceed these guidelines to ensure that occupational radiation doses are ALARA.

The present DOE dose limit for members of the public is 1 mSv/yr (100 mrem/yr) maximum for whole body exposure. The calculated contribution from APS system operations (direct and skyshine) at the nearest Argonne fence line is 30 µSv/yr (3.0 mrem/yr), whole body dose (7.2 µSv/yr [0.72 mrem/yr] direct and 23 µSv/yr [2.3 mrem/yr] from skyshine).

3.12.3 Containment

The shielding design allows unrestricted access to most adjacent areas, control rooms, and laboratories during injection operations. Access to outdoor areas on the infield side of the storage ring tunnel in the injection region is restricted by a chain link fence and posted. This fence also restricts access to the berm areas on the synchrotron and the linac. There is also a fence on the west side of the synchrotron that restricts access to the synchrotron berm and LEA enclosure berm.

Linac: The linac is housed in a concrete tunnel 75 m long (246 ft) having inner dimensions of 2.7 m × 2.7 m (9 ft × 9 ft), with the charged particle beamline located 1.4 m (4.5 ft) above the floor. This space is surrounded by radiation protection material equivalent in shielding ability to a 2-m (6.6 ft) or greater thickness of concrete. The roof is 30-cm-thick (1 ft) concrete covered with enough earth berm to be the shielding equivalent of 2 m of concrete. At the low-energy (east) end, the shielding enclosure is made up of 1 m (3.3 ft) of removable concrete blocks. This shielding is augmented in the area of the former positron target (used during the initial years of APS operation) near the middle of the building with a 30-cm-thick (1 ft) steel plate in the roof and back wall and additional local shielding. A 40-cm-thick (16 in) steel plate is located in the wall on the klystron gallery side extending for 1.5 m upstream and 3.5 m downstream, a total of 5 m (16 ft). Localized shielding formerly used around the positron converter target consists of lead, polyethylene, and/or castable shielding mixtures. This localized shielding assured that the design goal of DOE/EH-0256 T (DOE 1994a) was met. This shielding has been removed since only electron operations are now conducted.

Radiation generated in the linac results from the impingement of the beam on accelerator components and potentially from the operation of the klystrons and SLED cavities. During injection, the calculated radiation dose equivalent rate at the klystron gallery wall at the nearest point to the converter target is less than 4.7 µSv/h (0.47 mrem/h). Actual measurements taken since 1995 reflect levels near background, ≤ 0.15 µSv/hr (15 µrem/hr).

Linac rf System: The klystrons, which generate rf power, are shielded by lead to limit x-ray production to acceptable levels. During operation of the klystrons or the rf drive, the tunnel areas are interlocked to prevent entry.

Linac Extension Area (LEA): The LEA is housed within the synchrotron tunnel, LEA enclave, and in a 2.7 m × 3.7 m (9 ft × 12 ft) cross-section concrete tunnel 48.8 m (160 ft) in length. The roof is 0.3 m (1 ft) of concrete supplemented by earth berms to give an equivalent shielding thickness of more than 1 m (3.3 ft) of concrete. The walls are 0.3 m (1 ft) of concrete supplemented by earth berms to give an equivalent concrete shielding thickness of 2 m (6.6 ft). At the downstream (west) end, a concrete maze consisting of three walls, two of cast-in-place concrete and one built up of concrete blocks, each 0.9 m (3 ft) thick, is used to protect occupants of the end-station building. Slots in these walls leading to the end station are filled with equivalent lead and/or concrete except any reviewed and approved minimum-required openings that may be utilized. Additional lead shielding, can be placed at relevant locations along the beam tunnel Supplementary shielding is supplied in front of the initial concrete wall forming the maze. Passive dosimetry results since 1998 indicate that radiation levels behind the maze walls are near background, ≤ 0.15 µSv/hr (15 µrem/hr).

The upstream (east) end wall, used to protect LEA tunnel occupants from radiation produced in the synchrotron tunnel during injector operations, consists of a concrete wall 1.2 m (4 ft) thick.

Particle Accumulator Ring: The PAR, 30.67 m (100 ft) in circumference, shielding consists of 1.3-m-thick (4.3-ft) concrete walls, with a ceiling 2.7 m (9 ft) high to match the linac enclosure and a concrete roof 1 m (3.3 ft) thick. The north wall is the same as the linac enclosure and is made up of concrete and earth berm—the shielding equivalent of 2 m (6.6 ft) of concrete. The west wall is made up of removable concrete blocks 1.5 m (4.9 ft) thick with a cast-in-place entrance maze. The linac and PAR are connected and constitute one radiation control zone. Localized high beam-loss points identified during commissioning are shielded with additional lead. Lead in the forward direction from the magnets has been extended, and lead has been placed in the dipole magnet gaps. Additional concrete blocks and lead shielding have also been placed in the ventilation duct penetrations. Use of the PAR is needed during acceleration of electrons.

Radiation hazards in the PAR area are the result of particle beam losses resulting in bremsstrahlung radiation and neutron production. The highest calculated radiation

dose equivalent rate outside of the concrete PAR wall is 2.2 µSv/h (0.22 mrem/h), with the addition of 20.32 cm (8 in) of localized lead shielding in the forward direction at high loss points, for a total dose of 37 nSv (3.7 µrem) per injection. Radiation measurements indicate a dose rate of ≤ 1 µSv/hr (≤ 0.1 mrem/hr).

Injector Synchrotron: The injector synchrotron, 368 m (1207 ft) in circumference, is housed in a 2.7 m × 2.7 m (9 ft × 9 ft) cross-section concrete tunnel. The walls and roof are 0. 3 m (1 ft) of concrete supplemented by earth berms equivalent in shielding to more than 0.8 m (2.6 ft) of concrete. The walls of the tunnel in the injection and extraction buildings are 1.5 m (4.9 ft) thick. The wall of the tunnel in the injection building is augmented in the area of an intermediate beam dump along the LEA transport line. An additional 5 m × 2.4 m × 0.46 m (16.5 ft × 8 ft × 1.5 ft) of concrete is used in this area, bringing the total thickness to nearly 2 m.

Injector rf System: The klystrons, which generate rf power, are shielded by lead 0.24 cm (3/32 in) to limit x-ray production to less than 1.4 µSv/h (0.14 mrem/h) at a distance of 30 cm (1 ft) from the shield. Additionally, the systems are continually monitored to ensure rf leakage remains below the allowable limit of 3.5 mW/cm^2.

Storage Ring: The storage ring is housed in a concrete tunnel whose outside wall has the form of a ratchet wheel or saw tooth. The tunnel cross-section dimensions are 2.7 m × 2.7 m (9 ft × 9 ft) in regions where the outside wall runs parallel to the storage ring circumference, but wider in the regions of the ratchets to provide space for front- end components. The inside wall of the concrete tunnel is parallel to the particle orbit. Both tunnel sidewalls are concrete 0.8 m (2.6 ft) thick, or the shielding equivalent, based on the attenuation needs for radiation generated from a stored beam loss. For the ratchet sections, where the shield extends in a radial direction, the shielding consists of 0.8 m (2.6 ft) of high-density concrete, except for a 0.5 m × 0.5 m (1.5 ft × 1.5 ft) square opening centered on the photon beamline. Forty of these openings have been prepared for the installation of beamlines, and the shielding consists of 25 cm of lead followed by 25 cm of dense polyethylene followed by an additional 25 cm of lead. The shielding in the remaining openings consists of 25 cm (10 in) of lead followed by 55 cm (22 in) of concrete. The tunnel roof is 1 m (3.3 ft) of concrete. Additional lead and dense polyethylene shielding have been placed as needed based on measurements made during facility commissioning.

During operation of the storage ring klystrons, sections of the tunnel areas are interlocked near the rf cavities to prevent entry during operation. The high power levels generated by the cavity extract electrons from the cavity vacuum chamber walls and accelerate them to several hundred keV, which results in x-ray production when these electrons strike the opposite chamber wall. Radiation fields of several hundred mrem/ h at 1 m are produced and are adequately shielded, either by distance to the exclusion fence or additional local shielding.

3.12.4 External Radiation Levels and Monitoring

This section addresses the estimates of the radiation levels induced in the soil and released to the air by the APS. It also identifies the programs for monitoring the radiation from the APS facility. The results of the current monitoring program establish that radioactive emissions from existing Argonne facilities and the APS are low and do not pose a threat to the health or safety of those living in the vicinity of the site.

3.12.4.1 Soil and Water Activation

Measurements of radiation levels of the converter and septum magnets indicate levels well below those estimated through model calculations. Analysis of the filter medium in the water-cooling system shows no increased radioactivity in the filters. This implies that the cooling system water is not being activated. Although no soil samples or borings have been made under the linac, the fact that the water in direct contact with the accelerator systems is not being activated would support the conclusion that there is no soil activation as the result of accelerator operations.

3.12.4.2 Radionuclides and Off-Site Dose Estimate

The primary subsystem source of airborne radionuclides in the injector system is particle collisions with the accelerator components in the linac. Interactions result in bremsstrahlung formation. The interaction of the bremsstrahlung component in air results in the production of a number of radioactive products, primarily through □γ, n),(γ, 2n) and photospallation reactions. Several radionuclides are formed, but only three (C-11, N-13, and O-15) are important. Of these three radionuclides, N-13 makes up about 90% of the radionuclide concentration in air. The activated gases are exhausted from the linac target area at a maximum rate of 1388 m^3/min (49000 cfm).

The annual release of activation products from linac operations was conservatively calculated to be about 5.2 TBq (141 Ci) (Moe 1991). About 88% of this release is in the form of N-13, ($T_{1/2}$ ~ 10 min), with the balance as shown in Table 3.16. Air sampling in the exhaust stacks of the linac and LEA operations has detected no measurable activity.

Production and release of radiogases by the other components of the APS accelerator systems are relatively minor compared to that of the linac. Estimates by Moe (Moe 1993a, 1993b, 1993c, 1994, 1998) of the annual release of radioactive gases from the other components are 38 GBq (1.04 Ci) from the LEA, 13 GBq (0.38 Ci) from the PAR, 0.23 TBq (6.3 Ci) from the synchrotron, and 0.42 TBq (11.3 Ci) from storage ring operations. The total of all emissions is only 11% of the linac releases. Air sampling in the exhaust stacks of these systems has detected no measurable activity.

Estimates of the equilibrium concentration immediately following shutdown for all of the APS system components by Moe (Moe 1993, 1993a, 1993b, 1993c, 1994,

1998) indicate values less than the derived air concentration (DAC) for occupational exposure: 0.148 Bq/cc (4×10^{-6} µCi/cc) (DOE 1994b) for each of the system components.

The EPA-AIRDOSE/RADRISK atmospheric dispersion code was used to calculate the dose at the fence line and the dose received by the nearest individual on the 16 compass segments according to 40 CFR Part 61, Subpart H, "National Emission Standard for Radionuclide Emissions from Department of Energy (DOE) Facilities" (US Congress 1990). The computer model uses a modified Gaussian plume equation to estimate both horizontal and vertical dispersion of radionuclides. The results, based on a total release of 6.0 TBq/yr (163 Ci/yr) of these activation products at the location of the APS, indicate an exposure of 0.07 µSv/yr (7×10^{-3} mrem/yr) for the nearest resident, who would be located west-southwest of the Laboratory. The highest dose received by off-site residents from source term elements currently released from the Argonne site is estimated to be about 5.2 µSv/yr (0.52 mrem/yr). This exposure level would be to a resident north of the site standing in his yard throughout the entire year. The increased exposure these same residents may receive as a result of the APS facility is about a 1% increase over the current Argonne emissions.

Table 3.16 Annual Air Emissions

Radionuclide	Current Argonne Emissions TBq/yr (Ci/yr)	APS Emissions (Calculated) TBq/yr (Ci/yr)
Carbon-11	0.16 (0.6)	0.11(3.1)
Nitrogen-13	1.3 (34.5)	5.3 (144)
Oxygen-15	0.2 (5.2)	0.57(15.5)
Hydrogen-3	0.9 (25.0)	0
Radon-220	1.1 (30.0)	0

3.12.4.3 Monitoring Program

The APS conducts personnel and area radiological monitoring within the APS facility. It also participates in the Argonne External Radiological Monitoring Program. This program, referred to as the Argonne Environmental Monitoring Program, has been in operation since 1948, and monitoring results have been published in a series of annual reports (Golchert et al. 2003). These data provide a baseline for measuring impacts of present and future projects. The Environmental Monitoring Program is discussed in Chapter 8.

Personnel Monitoring: In spite of the low radiation levels that are present at the APS facility, there exists the potential for instantaneous higher levels under certain

fault conditions. Personnel monitoring devices are worn by personnel at the APS as required by DOE 10 CFR 835.402 (DOE 2009) to monitor for gamma and neutron exposure. The radiation levels around the experimental beamlines have not exceeded levels that would require personnel monitoring devices as required by DOE 10 CFR 835.402 (DOE 2009). The Argonne Environment, Safety, and Quality Assurance Division (ESQ) Radiological Safety Group is responsible for issuing these devices and ensuring they are processed and analyzed.

When not in use, personnel monitoring devices issued at the APS are returned to designated racks. In compliance with Argonne procedures, assigned personnel monitors are exchanged quarterly for new ones, and DRG personnel read the used ones.

All visitors are escorted while in "accelerator systems" enclosures and are issued personnel dosimeters. Groups of visitors who are guided through radiation areas where exposure is known to be low, such as the linac and storage ring tunnel, use a single monitor assigned to the tour guide for that period. The dosimeter is returned to APS- UES personnel with the names of the guide and the individuals in the tour.

Fixed Area Monitoring: Area monitors are used to provide readings of gamma and neutron radiation fields for critical areas adjacent to shielding. These are suitably hardwired to alarm levels and, if required, to beam-off interlock. The system uses processor display units with gamma and neutron sensor probes. These units consist of a processor, a gamma ion chamber probe, and a neutron proportional counter [using a 5-cm (2-in) active length BF_3 tube in an Anderson-Braun moderator]. The gamma ion chamber probe has sufficient transient response to pulsed radiation fields to trigger shutdown in the event of an accident situation.

Radiation Protection Program: Argonne has an existing radiation protection program that complies with the requirements of 10CFR835 (DOE 2009). Details of the control requirements and procedures can be found in the Argonne ESH Manual Chapter 5 (ANL onlineB).

3.13 Electrical Safety

Electrical safety is a major concern in accelerator operations. Electrically energized systems present one of the greatest potentials for injury in this type of operation. The hazards associated with electrical operations and the safety aspects of these hazards are well understood and documented in industry as well as in the accelerator community.

The APS electrical safety program sets out the requirements for:

- Design and safety reviews for major equipment.
- Inspection of new installations or modifications.

- Training of supervisors and personnel who operate or work with electrical equipment.

All electrical installations and practices at the APS conform to applicable American National Standards Institute (ANSI) Safety Codes, the National Electrical Code, National Electrical Manufacturing Association standards, and Building Officials and Code Administration; NFPA 101 (NFPA 1991), NFPA 70B (NFPA 1994), NFPA 70E (NFPA 1995), OSHA 29 CFR 1910 Subpart S (U.S. Congress 1994), and OSHA 29 CFR 1926 Subpart K (U.S. Congress 1996c), as well as the Argonne ES&H Manual (ANL onlineB).

Design and Safety Review of Major Equipment: Electrical safety has been given due consideration during design and safety reviews. These reviews are performed by independent individuals who possess the requisite expertise to evaluate apparatus and procedures either as part of the APS Electrical Safety Committee or other independent review committees convened specifically for the purpose of reviewing the equipment.

All electrical or electronic installations or fabrications are planned, designed, and where applicable, approved prior to construction by personnel qualified through training and/ or experience in the construction and/or operation of electrical apparatus.

Inspection of New Installations or Modifications: For all new installations or modifications to existing apparatus, inspections are performed by persons possessing the requisite expertise to evaluate apparatus for electrical safety compliance. These inspections contain but are not limited to:

- Verification that all electrical equipment is wired, insulated, and grounded properly
- Location of applicable safety signage.
- Verification that the apparatus is equipped with the applicable safety equipment such as emergency shutoffs, fuses, circuit breakers, crowbars, etc.

Training: All personnel who operate or work with electrical equipment are required to be CPR certified. These employees and their supervisors are required to take applicable electrical safety training, which includes lockout/tagout. Working-hot safety training is required for those individuals authorized to work in these conditions. Training is tracked and documented through the Argonne Training Management System. The responsibility for complying with electrical standards, practices, and procedures addressed in the classroom and on-the-job training lies with each employee.

The responsibility of each supervisor within APS is to ensure that every employee under his purview is properly trained, is aware of the APS Electrical Safety Policy (Section III of the APS ES&H Manual), and follows established procedures.

4.0 HAZARD ANALYSIS

The following sections of this chapter identify potential hazards that may occur in the course of operation of the accelerator system and beamlines. It addresses the procedures and equipment used to control the hazard and reduce the risk levels to ensure safe operation.

The potential hazards are: (1) ionizing radiation, (2) non-ionizing radiation, (3) electrical, (4) fire, (5) vacuum and pressure, (6) magnetic fields, (7) cryogenic, (8) chemical, (9) oxygen deficiency, (10) noxious gases, (11) mechanical, and (12) environmental.

4.1 Hazard Analysis Methodology

The design and development of the APS and its technical components have been the result of an iterative review process established during the conceptual stages of the project. During the conceptual development of the APS, regular meetings were held to address the safety of the design and the effects of the operation of the technical components. This process began with the identification of hazards, their evaluation, development of control or alternative mechanisms to address the identified hazards and, where necessary, a revision of the design to assure that the hazards were eliminated or appropriately mitigated. As designs progressed and became more detailed, the safety review and revision process continued. This self assessment exercise has been supplemented by several independent evaluations by reviews called by both DOE and APS itself. The result is a design in which all safety concerns have been addressed.

The iterative process of hazard evaluation began in 1984 with the formation of a safety committee to study safety issues for the 6-GeV Conceptual Design Report (ANL 1986). From the onset, the safety of components was evaluated as the components were designed. When assembled, the components were inspected by an independent APS Safety Review Committee that also reviewed the system safety documentation and the equipment before the systems were energized. Comments and guidance from each of these reviews provided input to the iterative process of safety design and procedures improvement.

In addition, the DOE Office of Energy Research has conducted two extensive, independent reviews (February 13-14, 1990 and October 26-27, 1992) of the APS safety program. Both of these reviews included radiation safety, interlock systems, fire safety, electrical safety, and environmental protection.

Progressively, a more general list of potential hazards associated with radiation sources, energy sources, and hazardous materials, as well as those hazards arising from natural phenomena that could occur during commissioning and during normal

operations, has evolved. These hazards are evaluated in terms of their potential on- or off-site consequences and associated risk.

The x-ray beamline review process is currently managed by the Beamline Safety Design Review Steering Committee. From the onset, the safety of the beamline components have been evaluated as the components are designed. When assembled, the beamline components are inspected by the Beamline Commissioning Readiness Review Team and the appropriate APS Safety Committees. Comments and guidance from each of these reviews provide input to the iterative process of safety design and procedures improvement.

The Beamline Safety Design Review Steering Committee conducts its evaluation in a systematic manner using the expertise of the committee members as well as the committee advisors. The initial safety analysis for each beamline is prepared by the group managing the beamline. The estimated effect of each hazard is evaluated by the Beamline Safety Design Review Steering Committee with regard to its potential impact on personnel and on the operation of the facility.

All accelerator system and experimental beamline risk analyses were based on a bounding event approach, where the most severe of each particular category of credible accident was analyzed to obtain worst-case results. Each event analysis included determination of the initiating occurrence, possible detection methods, the safety features that would prevent or mitigate the event, the probability of the event occurring, and the possible consequences.

The probability and consequence estimates of each hazard were made on the basis of best professional judgment and guidance provided by Argonne ESH/QA. The probability and consequence levels were categorized using criteria presented in the DOE 5480.25 Guidance for an Accelerator Facility Safety Program Draft #6 dated November 7, 1992. The probability rating levels are shown in Table 4.1. The consequence rating levels are shown in Table 4.2. The hazard risk was determined using the matrix shown in Figure 4.1. The analysis was used to determine the adequacy of the facility and systems designs and formed the basis for the development of needed administrative controls. The following text provides a narrative description of the hazards.

The consequences of APS operations, including conceivable accidents, present barely detectable off-site or environmental impacts. As a result, the APS has been designated as a low-hazard facility by Dr. James F. Decker, Acting Director of the Office of Energy Research, on June 14, 1993.

Table 4.1 Hazard Probability Rating Levels

Category	**Estimated Range of Occurrence Probability (per year)**	**Description**
High	$>10^{-1}$	Event is likely to occur several times during the facility or operation lifetime.
Medium	10^{-2} to 10^{-1}	Event may occur during the facility or operation lifetime.
Low	10^{-4} to 10^{-2}	Occurrence is unlikely or the event is not expect ed to occur, but, may occur during the life of the facility or operation.
Extremely Low	10^{-6} to 10^{-4}	Occurrence is extremely unlikely or the event is not expected to occur during the life of the fa cility or operation. Events are limiting faults considered in design.
Incredible	$<10^{-6}$	Probability of occurrence is so small that a rea sonable scenario is inconceivable. These events are not considered in the design or SAD accident analysis.

Table 4.2 Hazard Consequence Rating Levels

Consequence Level	**Maximum Consequence**
High	Serious impact on-site or off-site. May cause deaths or loss of the facility/operation. Major impact on the environment.
Medium	Major impact on-site or off-site. May cause deaths, severe injuries, or severe occupational illness to personnel or major damage to a facility/ operation or minor impact on the environment. Capable of returning to operation.
Low	Minor on-site with negligible off-site impact. May cause minor injury or minor occupational illness or minor impact on the environment.
Extremely Low	Will not result in a significant injury or occupation illness or provide a significant impact on the environment.

Figure 4.1 Risk Determination

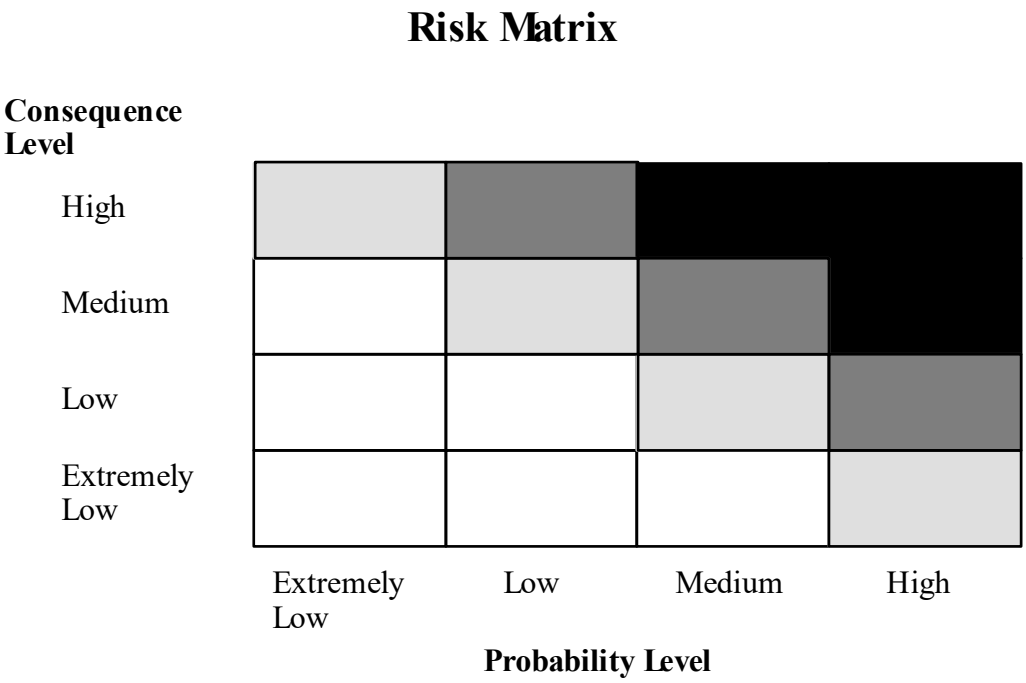

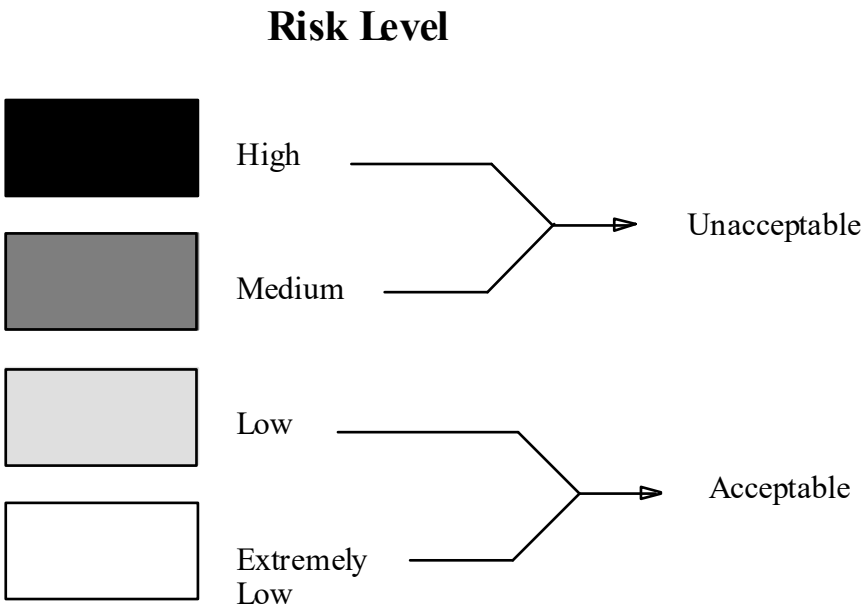

4.2 Ionizing Radiation Hazards

This section details the ionizing radiation hazards which could result in external exposure of personnel. Prompt radiation hazards arising from the loss of beam in targets, beam stops, septum magnets, and accelerator components lead to the production of radiation fields during injector operations. These radiation fields consist mainly of bremsstrahlung (x-rays), gamma rays, and neutrons. Interaction of these radiations lead to activation of accelerator components which could also represent potential external exposure hazards. As the stored beam circulates, a small fraction of the beam is lost due to collisions with gas molecules, interactions among beam particles, and orbital excursions which produce radiation also.

The section also includes discussion of the maximum credible incident (MCI) for each of the injector system components and the storage ring. The dose consequences of the MCI are presented, as well as general hazard summaries for the injector system components and the storage ring. The dose consequences are given in terms of dose rate (μSv/h [mrem/h]), indicating the maximum dose for a 1-hour exposure. The APS does not expect any loss scenario to last longer than 20 minutes. The general conclusion is that hazard probability is low and the dose consequences are low, so that the hazard risk level is extremely low.

4.2.1 Linac

4.2.1.1 Linac Prompt Radiation Hazards

4.2.1.1.1 Normal Linac Operations for Electrons

Electrons are produced at low energy (2-5 MeV) in one of three electron guns, and are introduced into the accelerating structures upstream of the bunch compression chicane. The nominal beam energy at the bunch compressor is 150 MeV. Downstream of the bunch compressor, the electrons are accelerated further, with a maximum total beam energy of 700 MeV. Electrons may be injected into the Particle Accumulator Ring (PAR), the Booster Synchrotron, or the Linac Extension Area (LEA). The nominal operating energy for PAR injection is 325 MeV, with a maximum energy of 450 MeV; the nominal operating energy for the booster injection is 325 MeV, with a maximum energy of 450 MeV; and the nominal operating energy range for LEA injection is 217-700 MeV.

The linac uses two types of electron guns to produce the initial electron beam: thermionic-cathode rf guns and photocathode rf guns. Presently, three electron guns are installed in the linac. Two thermionic-cathode rf guns serve as the primary injectors for storage ring operations (PAR or Booster injection); the single photocathode rf gun is the primary injector for LEA. Any gun can provide beam to any destination; only one gun can, at a given time, provide beam to the linac.

Since the output of the guns is less than that of the DC gun, the maximum power in the upstream linac is now lower than before. Calculations, based upon a power level of 825 W (275 MeV,3A), yielded a maximum dose rate in the klystron gallery aisleway, 2.3 m from the shield wall, of 268 μSv/h (26.8 mrem/h) for a point loss of the entire beam on the accelerating structure. Dose rates, using the present guns, will be correspondingly lower since the dose rates will scale with the beam power.

In addition to a total beam loss in an accident, some of the beam will be lost along the length of the linac. This loss should be relatively small, but would lead to a dose rate in the klystron gallery. It is assumed for purposes of calculation that the entire electron beam is accelerated to 700 MeV and that 10% of the beam is lost along the length of the linac. The loss would result in a maximum radiation dose rate of 1.8 μSv/h (0.18 mrem/h) in the klystron gallery at 2.3 m from the shield wall. A summary of relevant radiation dose rates for several scenarios is shown in Table 4.3.

The safety envelope for electron operation has been defined as 1.0 kW of electrons accelerated by the entire linac. The safety envelope has been defined in terms of beam power to allow flexibility in the choice of operating beam energy and current.This amount of beam power was calculated to produce a maximum radiation dose rate of 325 μSv/h (32.5 mrem/h) in the klystron gallery at 2.3 m from the shield wall. As indicated above, if 10% of this power is lost along the linac during normal operation, the dose rate would be below 2.5 μSv/h (0.25 mrem/h). This indicates the shielding is adequate to mitigate the dose rate to acceptable levels.

The electrons produced from the gun are accelerated in the linac to a maximum of 700 MeV.

Linac equipment failure and/or interlock system failure could potentially lead to the production of increased radiation in the linac araea. This is extremely unlikely, since the linac equipment and several of the interlocks would have to fail simultaneously.

Table 4.3 Summary of Radiation Dose Rate Calculations

Particle Type	e^-	e^-	e^-
Power	0.84 kW	0.825 kW	1.0 kW
Beam Energy	700 MeV	700 MeV	700 MeV
Mode**	MCI	operating envelope	safety envelope
Dose Rate (μSv/h)*	273	1.5	1.8
Position	klystron gallery	klystron gallery	klystron gallery

* multiply μSv/h by 0.1 for mrem/h
** except for the MCI case, loss of 10% of beam is assumed

4.2.1.1.2 Linac Maximum Credible Incident

The maximum credible incident has been defined for purposes of calculation as occurring when the linac is set up to run under maximum conditions. The full current of electrons in the downstream linac is accelerated to 700 MeV, and is subject to a point loss after the last accelerating structure.

The nominal operating parameters taken for the purposes of this MCI calculation are:

- 40 ns per pulse
- 30 Hz
- 40 nC of charge per pulse
- beam energy 700 MeV

In this incident, the resulting 840 W of beam power would produce a maximum dose rate of 273 μSv/h (27 mrem/h) in the klystron gallery aisleway, 2.3 m from the shield wall, for the duration of the incident. Current monitors in the linac are set to trip at low thresholds and would stop the linac after a suitable (less than 1 minute) integration time. There is no known failure mechanism which could lead to such a loss, but it is assumed for the purposes of the failure analysis to be a point loss which also simplifies the radiation loss calculations.

4.2.1.1.3 Linac X-rays

Pulsed Klystrons: The pulsed klystrons are Thomson-CSF type TH 2128 2856-MHz units with peak power of 38 MW. Operation of the klystron generates a high level of x- rays; therefore, a shielding requirement was incorporated into the klystron specifications. A lead housing, made to APS shielding specifications, was delivered along with the klystron. It is an integral part of the klystron assembly, which includes the klystron, magnet, pulse transformer, and oil tank. This shielding will reduce the theoretical residual x-ray flux to an acceptable level.

Additional shielding has been added as required at localized hot spots. Periodic surveys are performed, and Argonne-Safety Division/Environmnet Safety and Quality/Radiation Safety Office/Health Physics (ESQ/RSO/HP) is notified whenever any changes are made to the setup.

SLED Cavities: The SLED cavities are based on the SLAC design (Farkas et al. 1974). Operation of the SLEDs can potentially generate x-rays; therefore, 0.64 cm (1/4 in) of lead shielding is incorporated into the support. Experience at SLAC indicated that some SLEDs produced virtually no radiation, while others required lead shielding of 0.3 cm (1/8 in) or 0.64 cm (1/4 in). We have chosen the more conservative value, and the enclosures are normally locked during running. Periodic

surveys are performed, and ESQ/RSO/HP will also be notified whenever any changes are made to the setup. Additional shielding has been added as required.

4.2.1.2 Linac Activation and Residual Radiation Hazards

Deionized water is used for thermal regulation of the prebuncher, buncher, accelerating structures, transmission waveguides, klystrons, SLEDs, rf reference and drive lines, and magnets. Significant water activation is not anticipated (Moe 1992).

Standing water in the fire protection sprinkler pipes could potentially become activated; however, the production of relatively long-lived radionuclides (Be-7, H-3) in water requires neutrons with energy greater than 25 MeV. Production of neutrons above 25 MeV will occur when accelerated beams hit accelerator components or the downstream beam stops. The water sprinkler pipes are located on the tunnel wall, more than a meter away from the beam. The radiation fields at this location are about four orders of magnitude lower than those irradiating the cooling water and thus negligible activation is expected. Accumulation of radiation in the mixed bed polishing canisters and filter elements is monitored. Samples of the mixed bed, cation bed, anion bed, and carbon bed resins have been provided by the respective vendors prior to operation and have been analyzed to determine initial radioactive content. Spectra of used materials is compared to the initial spectra to ensure that there has been no added radioactivity. Any activated material will be disposed of as defined in the Argonne Waste Handling Procedures Manual (ANL onlineA).

Some beamline elements will become activated as a result of operation. Periodic surveys of accelerator components will be made, especially prior to modifications or maintenance operations. Components with a potential of becoming activated have been designed to facilitate simple and fast disassembly and removal.

Activation of loose particulate matter is not anticipated, as all beam stops are made of solid metal (aluminum, lead, or tungsten).

4.2.1.3 Linac Ionizing Radiation Hazard Summary

A significant amount of both personnel and equipment protection interlocks have been designed into the linac system to prevent an ionizing radiation hazard from existing outside of the linac shielded enclosure for an extended length of time. Operator training and operating procedures are in place. Therefore, the probability of occurrence of an ionizing radiation hazard has been determined to be low. Adequate shielding has been provided to maintain acceptable radiation levels outside the linac shielded enclosure. The ionizing radiation hazard consequence has been determined to be low. Therefore, the risk is extremely low.

4.2.2 LEA

4.2.2.1 LEA Prompt Radiation Hazards

Electrons, which are accelerated in the linac, may be sent on through the PAR and booster bypass lines into the LEA tunnel. For operation of the LEA at the design performance goal, 30 nC/pulse of 400 MeV electrons at 10 pulses/s are sent to the LEA tunnel. Losses of beam in the LEA line result in the production of radiation as described in the section for the storage ring: bremsstrahlung, x-rays, giant-resonance neutrons, medium-energy neutrons (25-100 MeV), and high-energy neutrons (>100 MeV). Owing to the low beam energy, muon radiation is not a problem for the LEA system. Gas bremsstrahlung originating in the residual gas of the vacuum chamber and x-rays from the rf cavities are also present; the hazards from each of these are discussed by Moe (Moe 1998).

4.2.2.1.1 Normal LEA Operations with Electrons

For LEA operation at the design performance goal, ten linac pulses are accelerated to 400 MeV each second, giving an electron current of 300 mA and a beam power of 120 W which is sent on to the LEA. This particle beam passes through the PAR bypass line and into the synchrotron tunnel, where it is bent upward for about 40 m at a 25 mradian angle, then bent parallel to the original direction and sent into the LEA tunnel The particle beam is absorbed in a beam dump inside the LEA tunnel. An additional beam stop, located in the synchrotron portion of the line, allows the beam to be transported through the linac and PAR bypass but not on to the LEA tunnel.

The major potential loss points during the process include the two bending magnets in the synchrotron portion of the line. Calculations for an operational loss scenario show of 0.01% per meter, the maximum radiation dose rate at occupied positions along the LEA line (klystron gallery in the linac, building 412 for the PAR and synchrotron, outside of the LEA tunnel berm, and in the end station) is 3.7 µSv/h (0.37 mrem/h) (Moe 1998). The highest dose rate, 6.2 µSv/h (0.62 mrem/h), occurs on the synchrotron mezzanine downstream of the synchrotron injection area near the rf waveguides, normally not an occupied area.

The safety envelope for LEA operation is 1000 W of power delivered to the LEA tunnel. Shielding computations (Moe 1998) indicate that slight modifications of the local shielding may be required for operation at the safety envelope.

Several types of equipment failure or accident conditions could lead to the production of higher radiation levels in the areas outside of the LEA system. It is unlikely that these conditions would persist for any significant duration since the

interlock system would also have to fail simultaneously, as well as the radiation monitors in the vicinity of the loss.

4.2.2.1.2 LEA System Maximum Credible Incident

For normal operating conditions, one would expect the losses in the LEA system to be localized primarily at the beam stops. However, in the event that the beam becomes missteered, the loss pattern is not predictable and one could find localized losses along the beamline which leads to electrons striking the vacuum chamber. This will be a small loss and the losses will be somewhat distributed. In the event of an rf failure or a shorted magnet, the entire beam would hit the vacuum chamber and be lost.

For the Maximum Credible Incident (MCI), the conservative assumption has been made that the loss is localized in a 4-m-long spill along the elevated portion of the LEA line in the synchrotron. The operating parameters used in the evaluation of the dose rate consequence of the MCI are the following:

- beam energy 700 MeV,
- 1000 W of beam power, $8.92 \times 10^{12} e^{-}/s$ in the beam,
- the full beam dumps along the length of the region (4m), which results in the highest dose rate on the synchrotron mezzanine near the rf waveguides,
- shutdown system fails to shut down beam within a few pulses,
- dose point is 2.443 m perpendicular distance from the loss region and is shielded by 0.16 cm of iron (Fe) and 100 cm of concrete,
- an individual is standing on the mezzanine directly above the region of the spill for the duration of the incident.

If such conditions were to occur, high radiation levels will be picked up by the Access Control and Interlock System (ACIS) via the nearby radiation monitors. If this system functions correctly, beam production is quickly terminated. Should this system fail to stop beam production, the MCI can occur.

During the MCI, the beam will continue to dump at the same location at the repetition rate of the linac. The highest total dose rate in the region is 131 mSv/h (13.1 rem/h). Assuming the duration of the incident was 20 minutes, the maximum expected dose under the circumstances would be 43.7 mSv (4.37 rem).

4.2.2.1.3 Normal LEA Operations

The LEA can utilize any of the three electron guns to generate the electrons. The electrons are accelerated along the existing linac beamline until they reach the LET area. In the LET, a separate LEA line has been assembled that continues through a portion of the synchrotron tunnel and into the LEA tunnel.

Section 3.11.1.4.1.1 describes the Linac/PAR Interleaving Operation which can be established while operating in the Top Up mode. That operation utilizes existing sensors, magnets, and vacuum lines. As such it creates no new electron beam paths, strikes locations, or failure modes and is not further discussed in this hazard analysis chapter.

4.2.2.1.4 X-rays

The rf cavities and SLEDs used to accelerate the electron beam to 700 MeV are the ones already provided for the linac. Periodic survey measurements were made by ESQ/RSO/HP during the operation of the cavities to evaluate the need for any additional local shielding and appropriate remedial action in the form of increased shielding was taken based upon survey results.

4.2.2.2 Activation and Residual Radiation Hazards

The main materials used in the LEA, which could become activated include aluminum, iron (steel), copper, tungsten, and lead. Analysis of the activation potential (Moe 1998) indicated that none of these materials (except perhaps copper) is expected to be a short-term activation hazard. Estimates of the long-term residual radioactivity in the LEA components indicated a total activity of 1.2 Ci, comprised mainly of W-181 (0.89 Ci), Na-22 (0.11 Ci), and Ta-182 (0.036 Ci). Since some activation occurs periodically, HSE/RSO/HP will perform surveys of LEA system components, especially by the beam dumps and transition pieces.

Computations of the potential activation of cooling water (Moe 1998) indicate that no significant water activation should occur. Additional water systems in the LEA system tunnel (such as the sprinkler system) are located over a meter away from the beam trajectory. The radiation fields at this location are at least four orders of magnitude less than those which irradiate the cooling water so that negligible activation is expected.

Activation of loose particulate radionuclides is not anticipated, since all shielding and other materials are essentially solid metal (aluminum, lead, iron, tungsten, and copper). Leakage of water from the closed cooling water system would give a total concentration of the relevant radionuclides that is below the discharge limit, stated in DOE 5400.5, Chg. 2, (DOE 1993d), for any one of these radionuclides.

4.2.2.3 LEA System Ionizing Radiation Hazard Summary

The highest estimated radiation dose rates outside of the relevant LEA system components are shown in Table 4.4 for operation both at the design performance goal and at the safety limit. The dose rates in the table are based upon a maximum operational time of 50% during a year for all of the components except for the synchrotron beam dump, which is assumed to run at an average of 50 W. The indicated dose rates are the highest dose rates obtained in a region near the particular location for the stated operation mode.

Table 4.4 Summary of Calculated Average Radiation Dose Rates in Occupied LEA System Areas

Mode	design performance goal		safety envelope	
Particle Type	e^-		e^-	
Power	120 W		1000 W	
Beam Energy	400 MeV		700 MeV	
Dose Rate (µSv/h)*	3.7	6.2	Dose Rate (µSv/h)*	3.7
Location	Connecting corridor	Synchrotron mezzanine	Location	Connecting corridor

* multiply µSv/h by 0.1 for mrem/h
† additional local shielding may be needed for operation at the safety envelope

A significant number of both personnel and equipment protection interlocks have been designed into the LEA system to prevent an ionizing radiation hazard from occurring outside of the LEA system for an extended period of time. Personnel will be trained to react to unusual conditions, and specific procedures for actions to be taken will be in place. The probability of the occurrence of a serious radiation hazard has been determined to be low. Adequate shielding of the LEA system has been provided. Ionizing radiation doses have also been determined to be low, consequently the risk is deemed to be extremely low.

4.2.3 Particle Accumulator Ring

4.2.3.1 PAR Prompt Radiation Hazards

Electrons which are accelerated from the linac may be directed into the PAR system. For normal operation of the PAR, 450-MeV electrons are accumulated during each half second and sent on to the synchrotron or stopped by the triple beam stop, which isolates the PAR from the synchrotron. Losses of beam in the system or the stop

result in the production of ionizing radiation including bremsstrahlung, x-rays, giant resonance neutrons, medium energy neutrons (25-100 MeV), and high energy neutrons (>100 MeV). Synchrotron radiation from the bending magnets, gas bremsstrahlung originating in the residual gas of the vacuum chamber, and x-rays from the rf cavity are also produced, but none of these represents a significant hazard (Moe 1993a). At the energies considered in PAR operations, muons are not a problem.

4.2.3.1.1 Normal PAR Operations

For linac operation at the design performance goal, electrons are accumulated each half second. The e^- pulses are directed toward the PAR by a bending magnet, pass through a septum magnet and are injected into, and accumulated in, the PAR orbit during one half second. The accumulated beam is extracted into the low energy transport line to the synchrotron in the same septum. The extracted beam is directed into the synchrotron for further acceleration and injection into the storage ring or into a tungsten beam stop, if the PAR is run independently. The unshielded radiation dose rates at 1 m from the triple beam stop for 5.4-W operation are shown in Table 4.5. Under these conditions, the maximum radiation dose rate at occupied positions around the PAR enclosure and in the synchrotron tunnel is 2.2 μSv/h (0.22 mrem/h) (Moe 1993a). The highest dose rate, 10 μSv/h (1 mrem/h), occurs on the PAR roof over the septum magnet, normally not an occupied area.

The safety envelope for the linac is 1000 W. The safety envelope for the PAR is 20 W of 500 MeV electrons. Shielding computations (Moe 1993a) indicate that slight modifications of the shielding may be required for operation at the safety envelope.

Several types of equipment failure or accident conditions could lead to the production of higher radiation levels in the areas outside of the PAR enclosure. It is highly unlikely that these conditions would persist for any significant duration since the interlock system, actuated by the radiation monitors in the PAR vicinity, would also have to completely fail.

4.2.3.1.2 PAR Maximum Credible Incident

For normal operating conditions, one would expect the losses in the PAR to be localized in the high dispersion sections on the east and west sides of the ring (see Figure 3.10). However, in the event that the beam becomes missteered, the loss pattern is not so predictable and one could find localized losses almost anywhere around the ring. ESQ/RSO/HP measurements during commissioning indicated localized losses in the dipole magnets which required supplemental lead shielding. For the maximum credible incident (MCI), the conservative assumption has been made that the loss is highly localized as a line source near the high dispersion region on the west side of the PAR ring.

The operating parameters used in the evaluation of the dose consequences of the MCI are the following:

- beam energy 500 MeV,
- 20 W of beam power, 1.25×10^{11} e^- in the accumulated beam,
- the accumulated beam dumps in a region which gives the highest dose rate outside of the enclosure,
- shutdown system fails to shut down beam within a short duration,
- dose point is 7.2-8.7 m from the loss region and is protected by only 1.3 m of concrete and 5.08 cm of lead.

Table 4.5 Unshielded Radiation Dose Rates from the Triple Beam Stop for Electron Operation at the Design Performance Goal (5.4 W) (μSv/h at 1 meter)*

Energy, MeV	450
Beam Stop	Tungsten
Rep. Rate/Charge	48 pps/0.25 nC/p
X-ray Bremsstrahlung:	
Forward	1.63×10^9
90°	7.49×10^5
180°	1.12×10^5
Neutrons:	
GRN (isotropic)	1.22×10^5
Medium Energy $25 \leq E \leq 100$ MeV	
Forward	2.49×10^3
90°	1.56×10^3
180°	6.86×10^2
High Energy $E \geq 100$ MeV	
Forward	6.24×10^2
90°	1.87×10^2
180°	1.9×10^1

* multiply μSv/h by 0.1 for mrem/h

If such conditions were to occur, faults will be picked up by the personnel Access Control and Interlock System (ACIS) via the nearby radiation monitors. If this system functions, beam production is terminated. Should this system fail to stop beam production, the MCI can occur.

During the MCI, the beam will continue to dump in the same region at the rate of two pulses per second. The forward directed beam (0°) will be attenuated by 20.32 cm of Pb and by the steel in a dipole magnet. The highest total dose near the dose point is 0.226 μSv (0.0226 mrem) per pulse, which represents the radiation which is not attenuated by the Pb beam stop, or the magnet steel in the forward direction. The shielding of this component is 5.08 cm of Pb and the 1.3-m-thick concrete wall (Moe 1993a). The dose rate becomes 0.0226 × 2 pps × 3600 s/h = 1.63 mSv/h (163 mrem/h). This condition would have to persist, and an individual be present at the dose point, for about 37 minutes to receive a dose of 1 mSv (100 mrem).

4.2.3.1.3 PAR X-rays

The rf cavity used to replenish energy lost by the circulating e^- beam in the PAR ring may emit low energy x-rays but these are not expected to produce a radiation field outside of the rf enclosure. If radiation fields are produced, the magnitude should be less than or equal to a few tens of mrem/h at the rf enclosure surface and will be easily shielded by the concrete walls of the PAR enclosure.

4.2.3.2 PAR Activation and Residual Radiation Hazards

The main materials used in the PAR system which could become activated include tungsten, lead, iron, and Inconel 625. Analysis of the activation potential by Moe (Moe 1993a) indicated that none of these materials is expected to be a short-term activation hazard. In addition, the low power levels used in the PAR operations preclude the buildup of any long-lived radionuclides in the system. Because some activation will occur, ESQ/RSO/HP will perform surveys of PAR components, especially by the beam stops and septum magnet areas.

Computations of the potential activation of cooling water (Moe 1993a) indicate that no significant water activation is anticipated. Additional water systems in the PAR enclosure (such as the sprinkler system) are located over a meter away from the beam orbit. The radiation fields at this location are at least four orders of magnitude less than those which irradiate the cooling water so that negligible activation of these water systems is expected.

Activation of loose particulate radionuclides is not anticipated, since all beam stops and other materials are solid metal (Inconel 625, lead, iron, and tungsten). Any leakage of water from the closed water system would involve total concentrations of radionuclides which are well below the discharge limits for any one of the radionuclides stated in DOE 5400.5, Chg. 2, (DOE 1993d).

4.2.3.3 PAR Ionizing Radiation Hazard Summary

The calculated average radiation dose rates outside of the PAR enclosure or synchrotron exclusion area are shown in Table 4.6 for both operation at the design

performance goal and operation at the safety envelope. These average dose rates are based upon a maximum operational time of 10% during a year. For operation at the safety envelope, it is expected that some additional local shielding may be needed and/or administrative control (such as limiting access, exclusion zones, etc.) employed to meet the DOE guidelines for exposure control.

Table 4.6 Summary of Average Radiation Dose Rates in Occupied PAR Areas

Particle Type	e^-	e^-
Power	5.4 W	20 W
Beam Energy	450 MeV	500 MeV
Mode	design performance goal	safety envelope
Dose Rate (μSv/h)*	0.22	0.8
Location	Outside PAR enclosure and/or exclusion fence	Outside PAR enclosure and/or exclusion fence

* multiply μSv/h by 0.1 for mrem/h

A significant number of both personnel and equipment protection interlocks have been designed into the PAR system to prevent an ionizing radiation hazard from occurring outside of the PAR enclosure or the synchrotron exclusion area for an extended period of time. Personnel will be trained, and specific procedures will be in place to achieve this goal. The probability of the occurrence of a serious radiation hazard has been determined to be low. Adequate shielding of the PAR enclosure and the LET line has been provided. Ionizing radiation doses have also been determined to be low, consequently the risk is deemed to also be extremely low.

4.2.4 Injector Synchrotron

4.2.4.1 Synchrotron Prompt Radiation Hazards

Electrons which are accumulated in the PAR will be directed into the injector synchrotron system. For normal operation of the PAR, electrons of 300 MeV to 450 MeV are accumulated during each half second and sent on to the synchrotron or stopped by the triple beam stop, which isolates the PAR from the synchrotron. Losses of beam in the synchrotron system result in the production of these radiations: bremsstrahlung, x-rays, giant resonance neutrons, medium energy neutrons (25-100 MeV), high energy neutrons (>100 MeV), and muons. Synchrotron radiation from the bending magnets, gas bremsstrahlung originating in the residual gas of the

vacuum chamber, and x-rays from the rf cavities are also produced, but none of these represents a significant hazard (Moe 1993b). At the high energies considered in synchrotron operations (E >1000 MeV), muons are produced, mainly in beam stops, but are not a significant radiation problem.

4.2.4.1.1 Normal Synchrotron Operations

For PAR operation at the design performance goal, linac pulses are accumulated each half second giving an electron current of 12 nA and a beam power of 5.4 W which is extracted and sent on to the synchrotron through the PAR septum and a low energy transport (LET) line for acceleration to 7.0 GeV. The e^- pulses pass through an injection septum magnet and are captured in the synchrotron orbit. The beam is accelerated to 7000 MeV during 245 ms of a cycle of the synchrotron, which operates at 2 Hz. At the end of the cycle, the 84-W beam is extracted into the high energy transport (HET) line by the extraction septum. The extracted beam is directed into the storage ring (SR) for use as part of the source of synchrotron radiation.

The major potential loss points in the synchrotron include the injection and extraction septums, the HET beam stop, and the beam scraper. The unshielded radiation dose rates at 1 m from the HET beam stop for 84-W operation (i.e. operation at the design performance goal) are shown in Table 4.7. Since the entire beam is directed into the beam stop, the dose rates represent the highest for this mode of operation. Under these conditions, the maximum radiation dose rate at occupied positions in the rf/extraction building and the Experiment Assembly Area in the storage ring building is 2 μSv/h (0.2 mrem/h) (Moe 1993b). The highest dose rate, 4 μSv/h (0.4 mrem/h), occurs on the synchrotron roof over the beam stop, normally not an occupied area.

The safety envelope for the synchrotron is 308 W of power delivered to the HET beam stop or sent on to the storage ring. Computations (Moe 1993b) indicate that the shielding is adequate for operation at the safety envelope.

4.2.4.1.2 Synchrotron Maximum Credible Incident

For normal operating conditions, one would expect the losses in the synchrotron to be localized in the high dispersion sections of the ring or spread somewhat uniformly around the ring. However, in the event that the beam becomes missteered, the loss pattern is not predictable and one could find localized losses almost anywhere around the ring. For the maximum credible incident (MCI), the conservative assumption has been made that the loss is localized along a 2-m-long region. This region includes a horizontally-focusing quadrupole in the straight section of the synchrotron ring which passes under the rf/extraction building.

Table 4.7 Unshielded Radiation Dose Rates from the HET Beam Stop for Electron Operation at the Design Performance Goal (μSv/h at 1 meter)*

Energy, MeV	7000
Beam Stop	Lead
Rep. Rate/Charge	2 pps/6 nC/p
X-ray Bremsstrahlung:	
Forward	3.56×10^{11}
90°	1.16×10^{7}
180°	1.74×10^{6}
Neutrons:	
GRN (isotropic)	1.91×10^{6}
Medium Energy $25 \leq E \leq 100$ MeV	
Forward	2.40×10^{5}
90°	5.99×10^{4}
180°	3.42×10^{4}
High Energy $E \geq 100$ MeV	
Forward	1.92×10^{5}
90°	1.51×10^{4}
180°	5.09×10^{3}

* multiply μSv/h by 0.1 for mrem/h

The operating parameters used in the evaluation of the dose consequences of the MCI are the following:

- beam energy is 7700 MeV,
- 308 W of beam power, 2.5×10^{11} e^{-}/s in the beam,

- the accumulated beam dumps in a region which gives the highest average dose rate outside of the tunnel,
- no ACIS radiation monitor is brought to its trip level
- the dose point is 3.34 m above the loss point and is partially shielded by 10.16 cm of iron and 1.0 m of concrete,
- no remedial action is taken in response to continuous alarms from the beam diagnostics equipment,
- an individual is standing in the rf/extraction building, directly above the beamline for the duration of the incident.

During the MCI, the beam will continue to dump in the same region at the rate of two pulses per second. The average total dose at the dose point is 1.56 μSv (0.156 mrem) per pulse. The dose rate becomes 1.56 × 2 pps × 3600 s/h = 11.2 mSv/h (1.12 rem/h) for the duration of the incident. This condition would have to persist, and an individual be present at the location directly above the loss region, for about 5.5 minutes to receive a dose of 1 mSv (100 mrem).

Calculations of the MCI incident using the EGS4 code indicate a dose rate about a factor of 8 lower (Moe 1994). This difference can be attributed to the lengthening of the shower development predicted by the code and the overly-conservative treatment of the photon attenuation in the semi-empirical formulations.

4.2.4.1.3 Synchrotron X-rays

4.2.4.1.3.1 Synchrotron Radiation

Synchrotron radiation (x-rays) produced in the bending magnets is mostly absorbed during the interaction with the vacuum chamber walls. That which does escape into the tunnel results in the production of small amounts of noxious gases, mainly ozone, nitrogen dioxide, and nitric acid (Moe 1993b). Most of the photons are of low energy (<25 keV). This radiation is easily shielded by the concrete wall and earth berm around the synchrotron tunnel.

Trace amounts of x-ray fluorescence will also be generated when synchrotron radiation strikes the mirror of the UV/visible synchrotron light diagnostics port. A dogleg in the light transport will be enclosed by shielding. This shielding is designed to provide sufficient attenuation of the fluorescent x-rays. An alternative scheme will use a thick plate of lead glass placed over the port. This too will provide sufficient attenuation of the fluorescent x-rays.

4.2.4.1.3.2 Radio Frequency Cavities

The rf cavities, used to replenish energy lost by the circulating e^- beam in the synchrotron ring, emit a spectrum of x-rays. Measurements of radiation levels produced by several of the 5-cell cavities in the rf test stand (Moe 1993b) indicated < 2 mGy/h (200 mrad/h) at 1 m from the cells. The four cavities used in the synchrotron are located in two groups of two on the north and south sides of the ring. The synchrotron rf system cannot be operated unless the ACIS system is in Beam Permit Mode, thus preventing people from being in the tunnel when the rf cavities are being supplied power. The synchrotron concrete and earth berm enclosure provides sufficient protection to personnel outside the tunnel from x-rays produced by these rf cavities.

4.2.4.2 Synchrotron Activation and Residual Radiation Hazards

The main materials used in the synchrotron system which could become activated include iron (steel), copper, and lead. Analysis of the activation potential by Moe (Moe 1993b) indicated that none of these materials is expected to be a short-term activation hazard. Previous estimates of the long-term residual radioactivity in the synchrotron were made by Moe (Moe 1991) and indicated a total of 2 GBq (54 mCi), comprised of Fe-55 and Mn-54. This estimate did not include activation of the HET beam stop. This stop contains lead as the major shield and only short-term radionuclides are expected. Since some activation will occur, ESQ/RSO/HP will perform surveys of synchrotron components, especially by the beam stops and septum magnet areas.

Computations of the potential activation of cooling water (Moe 1993b) indicate that no significant water activation is anticipated. Additional water systems in the synchrotron tunnel (such as the sprinkler system) are located over a meter away from the beam orbit. The radiation fields at this location are at least four orders of magnitude less than those which irradiate the cooling water so that negligible activation of these water systems is expected.

Activation of loose particulate radionuclides is not anticipated, since all beam stops and other materials are essentially solid metal (lead, iron, and tungsten). Any leakage of water from the closed water system would involve total concentrations of radionuclides which are well below the discharge limits for any one of the radionuclides stated in DOE 5400.5, Chg, 2 (DOE 1993d).

4.2.4.3 Synchrotron Ionizing Radiation Hazard Summary

The highest calculated average radiation dose rates outside of the synchrotron tunnel, in the EAA, and in the rf/extraction building are shown in Table 4.8 for both operation at the design performance goal and operation at the safety envelope. The dose rates are based upon an average operational time of 10% during a year.

Personnel and equipment protection interlocks have been designed into the synchrotron system to prevent an ionizing radiation hazard from occurring outside of the synchrotron tunnel or in the rf/extraction building for an extended period of time. Personnel will be trained to react to unusual conditions, and specific procedures for actions to be taken will be in place. The probability of the occurrence of a serious radiation hazard has been determined to be low. Adequate shielding of the synchrotron tunnel and the HET line has been provided. Ionizing radiation doses have also been determined to be low; consequently the risk is deemed to be extremely low.

Table 4.8 Summary of Calculated Average Radiation Dose Rates in Occupied Synchrotron Areas

Mode	design performance goal			safety envelope		
Particle Type	e^-			e^-		
Power	84 W			308 W		
Beam Energy	7000 MeV			7700 MeV		
Dose Rate (μSv/h)*	0.03	0.13	Dose Rate (μSv/h)*	0.03	0.13	Dose Rate (μSv/h)*
Location	Outside synch. tunnel	In EAA	Location	Outside synch. tunnel	In EAA	Location

* multiply μSv/h by 0.1 for mrem/h

4.2.5 Storage Ring

4.2.5.1 Storage Ring Prompt Radiation Hazards

Electrons which are accelerated in the synchrotron may be extracted into the high energy transport (HET) line and sent on into the storage ring (SR). For operation of the synchrotron at the design performance goal electrons of 7000 MeV are extracted during each half second and sent on to the SR or stopped in the HET beam stop, which is located at the concrete wall which separates the synchrotron from the SR. Losses of beam in the HET line or in the storage ring result in the production of radiations previously described for the synchrotron: bremsstrahlung, x-rays, giant resonance neutrons, medium energy neutrons (25-100 MeV), high energy neutrons (>100 MeV), and muons. Synchrotron radiation from the bending magnets, gas bremsstrahlung originating in the residual gas of the vacuum chamber, and x-rays from the rf cavities are also produced; the hazard from each of these is discussed by Moe (Moe 1994). At the high energies extracted from the synchrotron ($E \geq 7000$ MeV), muons are produced, mainly in the forward direction, but are not a significant radiation problem.

4.2.5.1.1 Normal Storage Ring Operations with Electrons

For storage ring operation during injection at the design performance goal, two synchrotron pulses are extracted each second giving an electron current of 12 nA and a beam power of 84 W which is sent to the storage ring through the extraction septum and the HET line. The extracted beam is injected into the storage ring orbit by two magnets referred to as the thick septum and thin septum magnets.

The major potential loss points during injection in the SR include the injection septum and the transition piece of the first three insertion devices (IDs). The unshielded radiation dose rates at 1 m from the injection septum for 100% loss during 84-W operation are shown in Table 4.9. Since the entire beam is directed onto the septum, the dose rates represent the highest for this mode of operation. Under these conditions, the maximum radiation dose rate at occupied positions in the Experiment Assembly Area (EAA) and the experiment hall in the storage ring building is 18 μSv/h (1.8 mrem/h) (Moe 1994). The highest dose rate, 29 μSv/h (2.9 mrem/h), occurs on the storage ring roof over the beam stop, normally not an occupied area.

The safety envelope for the injection phase is 308 W of power delivered to the SR injection septum. Shielding computations (Moe 1994) indicate that slight modifications of the shielding may be required for operation at the safety envelope.

The design performance goal for the stored beam is 7000 MeV and 100 mA of circulating current (stored energy=2576 J), and the safety envelope is 9280 J of stored energy. This would nominally be achieved for 7000 MeV electrons at a circulating current of 360 mA.

For the case of the stored beam, the losses can be continuous over many hours as the stored beam circulates, due to collisions with gas molecules, interactions among beam particles, and orbital excursions which lead to electrons being lost from the beam and striking the vacuum chamber. This will constitute a small continuous loss whose magnitude will depend upon the beam mean lifetime, which has a design goal of 10 h. Since the losses are distributed around the ring, a dose rate will result from the radiation produced by the lost electrons. Failure of the rf or a shorted dipole magnet will cause the entire stored beam to be lost from the orbit and hit the vacuum chamber wall.

Computations have been made of the dose rate outside the tunnel for the case of continuous loss for a beam mean lifetime of 10 h (Moe 1994). The results give dose rates between 0.3 and 1.8 μSv/h (0.03-0.18 mrem/h) at the safety envelope for the stored beam energy (9280 J), depending upon whether the loss is evenly distributed over the ring or limited to the 40 high-dispersion sections, respectively. For a dump of the stored beam, the highest dose at any location for operation at the safety envelope would be 7.3 μSv (0.73 mrem).

Table 4.9 Unshielded Radiation Dose Rates from the Injection Thin Septum for 100% Loss at the Design Performance Goal (μSv/h at 1 meter)*

Energy, MeV	7000
Thin Septum Magnet	Copper and iron
Rep. Rate/Charge	2 pps/6 nC/p
X-ray Bremsstrahlung:	
Forward	3.56×10^{11}
90°	1.16×10^{7}
180°	1.74×10^{6}
Neutrons:	
GRN (isotropic)	9.84×10^{5}
Medium Energy $25 \leq E \leq 100$ MeV	
Forward	3.99×10^{5}
90°	9.98×10^{4}
180°	5.70×10^{4}
High Energy $E \geq 100$ MeV	
Forward	3.20×10^{5}
90°	2.51×10^{4}
180°	8.48×10^{3}

* multiply μSv/h by 0.1 for mrem/h

4.2.5.1.2 Storage Ring Maximum Credible Incident

For normal operating conditions, one would expect the losses in the SR to be localized primarily in the injection septum and the transition piece at the beginning of an insertion device (ID) during injection. In the latter case, the losses are expected to occur primarily at the first three ID sections; particularly at any of these IDs having a smaller gap ID chamber. However, in the event that the beam becomes missteered, the loss pattern is not predictable and one could find localized losses almost anywhere along the ring. Horizontal missteering of the beam may produce losses in the quadrupoles AQ2 and BQ2 on girders 1 and 5, respectively, as well as in the high dispersion regions near sextupole AS4 on girder 3 in any of the 40 sectors of the SR. In addition, under certain adverse conditions, the particle beam could be missteered down a bending magnet or ID beamline. As the stored beam circulates, a portion of the beam will be lost continuously over the mean lifetime of the beam which leads to electrons striking the vacuum chamber. This will be a small loss over many hours and the losses will be somewhat distributed around the ring as discussed above. Failure of the rf or a shorted dipole magnet will cause the entire beam to be lost from the orbit and hit the vacuum chamber.

For the maximum credible incident (MCI), the conservative assumption has been made that the loss occurs during injection and results in the particle beam being lost in the front end of an ID beamline. The region is a 4-m-long section that is located where the ratchet wall is only 50 cm from the beamline. The operating parameters used in the evaluation of the dose consequences of the MCI are the following:

- beam energy is 7700 MeV,
- 308 W of beam power, 2.5×10^{11} e^{-}/s in the beam,
- the total beam spills along the length of the region (4 m), which results in the highest dose rate outside of the storage ring tunnel,
- no ACIS radiation monitor is brought to its trip level,
- the dose point is 1.52 m perpendicular distance from the loss region and is shielded by 2.0 cm of Fe and 56.0 cm of high-density concrete,
- no remedial action is taken in response to continuous alarms from the beam diagnostics equipment,
- an individual is standing outside the storage ring tunnel directly adjacent to the region for the duration of the incident.

During the MCI, the beam will continue to spill at the same location at the rate of two pulses per second. The highest total dose at the dose point is 16.3 μSv (1.63 mrem) per pulse, which is at approximately 90° to the forward direction of the beam.

The dose rate becomes 16.3 × 2 pps × 3600 s/h = 117.4 mSv/h (11.74 rem/h) for the duration of the incident.

For the purposes of facility hazard classification, the incident must be assumed to continue for one hour. However, the probability that these conditions could persist for as long as one hour is low. It is very likely that the operators and the control system will intervene before five minutes have passed.

4.2.5.1.3 Storage Ring X-rays

4.2.5.1.3.1 Synchrotron Radiation

Synchrotron radiation (x-rays) produced in an insertion device do not penetrate the vacuum chamber wall unless scattered by gas molecules in the vacuum chamber, which is negligible at the design vacuum pressure. Synchrotron radiation produced in the bending magnets is largely absorbed (>90%) by the crotches and end absorbers. That which does escape into the tunnel results in the production of small amounts of noxious gases, mainly ozone, nitrogen dioxide, and nitric acid (Moe 1994). Most of the photons are of low energy (<25 keV), so that the escaping radiation is easily shielded by the high-density concrete wall of the storage ring tunnel.

4.2.5.1.3.2 Beam Diagnostics Beamlines

The bending magnet diagnostics beamline 35-BM provides both UV and x-ray imaging of the transverse electron beam profile, in addition to time profile information. Primary components of this beamline are the x-ray front end located inside the accelerator shielded enclosure, the shielded x-ray and UV experimental stations located outside the accelerator on the experiment hall floor, and ancillary equipment required to operate the beamline.

The insertion device beamline 35-ID generates x-rays with special spectral properties allowing fine resolution transverse profile and emittance measurements to be made. The diagnostics insertion device is located inside the accelerator enclosure at the Sector 35 straight section. Hazards, other than ionizing radiation, associated with the ID are covered in sections 4.4.7.9, 4.7, and 4.12.

Front-end components to be used in both 35-BM and 35-ID are described in section 3.9, and hazards associated with them are evaluated in sections 4.4.7.9 and 4.12. The experimental stations are designed to reduce radiation levels well below the average worker dose and accidental exposure specified by APS shielding policy (section 3.12.1).

4.2.5.1.3.3 Radio Frequency Cavities

The rf cavities, used to replenish energy lost by the circulating e^- beam in the storage ring, emit a spectrum of x-rays. Measurements of radiation levels produced by

several of the single cell cavities in the rf test stand (Moe 1993c) indicated ≤ 2 mGy/h (200 mrad/h) at 1 m from the cavities. The sixteen cavities used in the storage ring are located in groups of four on the north side of the ring. They are located in ACIS zone-F. The cavities will be shielded by lead, as needed, to reduce the radiation levels at the exclusion fences to < 2.5 μSv/h (0.25 mrem/h). Any additional leakage will be detected during initial operation of the cavities in the tunnel and will be corrected with additional local shielding. Periodic survey measurements by ESQ/RSO/HP during the operation of the cavities to evaluate the need for any supplemental shielding are made, and appropriate remedial actions are taken based upon survey results.

4.2.5.2 Storage Ring Activation and Residual Radiation Hazards

The main materials used in the SR which could become activated include aluminum, iron (steel), copper, and lead. Analysis of the activation potential by Moe (Moe 1994) indicated that none of these materials is expected to be a short-term activation hazard. Previous estimates of the long-term residual radioactivity in the storage ring were made by Moe (Moe 1991) and indicated a total of 4.48 MBq (1.21 mCi), comprised of Al-26 and Na-22. Since some activation will occur, ESQ/RSO/HP will perform surveys of storage ring components, especially in the vicinity of the septum magnet, transition pieces, and along the ID vacuum chambers.

Computations of the potential activation of cooling water (Moe 1994) indicate that no significant water activation is anticipated. Additional water systems in the SR tunnel (such as the sprinkler system) are located over a meter away from the beam orbit. The radiation fields at this location are at least four orders of magnitude less than those which irradiate the cooling water so that negligible activation of these water systems is expected.

Activation of loose particulate radionuclides is not anticipated since all shielding and other materials are essentially solid metal (aluminum, lead, iron, and copper). Any leakage of water from the closed water system would involve total concentrations of radionuclides which are well below the discharge limits for any one of the radionuclides stated in DOE 5400.5, Chg. 2 (DOE 1993d).

4.2.5.3 Storage Ring Ionizing Radiation Hazard Summary

The highest calculated average radiation dose rates outside of the storage ring tunnel, in the EAA, and in the experiment hall of the storage ring building are shown in Table 4.10, for both operation at the design performance goal and operation at the safety envelope. These all occur during the injection phase of operation. The dose rates during stored beam conditions are below the original DOE guideline of 2.5 μSv/h (0.25 mrem/h); additional shielding may be required for the newer, more stringent requirement of 0.5 μSv/h (0.05 mrem/h). The dose rates in the table are based upon a maximum operational time of 10% during a year for injection and 8000

h per year for stored beam conditions. The indicated dose rates are the highest dose rates obtained in a region near the particular location for the stated operation mode.

A significant amount of both personnel and equipment protection interlocks have been designed into the storage ring system to prevent an ionizing radiation hazard from occurring outside of the SR tunnel for an extended period of time. Personnel will be trained to react to unusual conditions, and specific procedures for actions to be taken will be in place. The probability of the occurrence of a serious radiation hazard has been determined to be low. Adequate shielding of the SR tunnel has been provided. Ionizing radiation doses have also been determined to be low, consequently the risk is deemed to be extremely low.

Table 4.10 Summary of Calculated Average Radiation Dose Rates in Occupied Storage Ring Areas

Mode	design performance goal		safety envelope	
Particle Type	e^-		e^-	
Power	84 W		308 W	
Beam Energy	7000 MeV		7700 MeV	
Dose Rate (μSv/h)*	1.9	6.6	7.1†	24.5†
Location	In EAA	In exp. hall	In EAA	In exp. hall

* multiply μSv/h by 0.1 for mrem/h
† additional local shielding may be needed for operation at the safety envelope

4.2.6 X-ray Beamlines

4.2.6.1 Introduction

Both bremsstrahlung and synchrotron radiation will be present in the experiment hall. These two types of radiation have been further broken down into primary and secondary bremsstrahlung and white and monochromatic synchrotron radiation for hazard analysis. Both bremsstrahlung and synchrotron radiation are produced behind the ratchet wall and reach the experiment hall floor by either coming through the ratchet wall or through a ratchet-wall penetration. Radiation coming through the ratchet wall has already been covered and will not be discussed further here.

The synchrotron radiation coming through the ratchet-wall penetration is used by experimenters. As required by the experimenter a shutter within the ratchet wall can be opened or closed to pass or stop the beam. Prior to deflection by a mirror or monochromator, the primary bremsstrahlung will be coincident with the synchrotron

radiation and will come through the ratchet-wall penetration whenever synchrotron radiation is being used. In what follows, the hazards associated with each radiation component will be identified, and the mitigation of the hazard discussed for the typical case of the Sector 1 insertion-device and bending-magnet beamlines.

The shielding requirements for the different types of radiation will depend on both the current and the energy of the stored particle beam. In each case, shielding analysis has been done for the potential operational parameters that require the greatest amount of shielding. The bremsstrahlung calculations have been performed for a beam current of 300 mA and a beam energy of 7.0 GeV. This corresponds to the operating envelope of the storage ring. But the shielding recommendations are scaled for a beam energy of 7.7 GeV and a beam current of 327 mA, which corresponds to the accelerator safety envelope. The synchrotron radiation calculations are for a beam current of 200 mA and for the beam energy of 7.5 GeV. However the recommended shielding for synchrotron radiation includes a tenth value layer more of the shielding material, which adequately covers operation at the accelerator safety envelope. Therefore for operation at the accelerator operating envelope, the shielding recommendations are conservative.

4.2.6.2 Bremsstrahlung

Bremsstrahlung is produced when a high-energy charged article scatters from storage ring components or residual-gas molecules in the storage ring vacuum. These charged particles are initially electrons, but will include positrons as the shower develops. Bremstrahlung will generally be associated with beam loss. Beam loss can either be transient such as during injection and beam dumps, or steady state as with Touschek or residual gas scattering processes. Interactions with components occur primarily during injection or during beam dumps. Scattering from residual gas occurs continually during storage ring operations.

Primary bremsstrahlung (PB) is defined as photons or charged particles created when full-energy beam particles (electrons) scatter from either the residual gas in the vacuum chamber (gas bremsstrahlung (GB)), or from any material component in the beamline. Secondary bremsstrahlung (SB) is the electromagnetic shower created when PB radiation scatters from beamline components resulting in the generation of electrons, positrons, and photons. The mitigation of the hazards associated with PB and SB is somewhat different and is discussed separately.

For PB calculations, a storage ring energy of 7 GeV and a storage ring current of 300 mA have been used unless explicitly noted otherwise (Ipe et al. 1993). This corresponds to a stored beam energy of 7728 Joules, which is defined as the accelerator operating envelope. The accelerator safety envelope is 20% more than the operating envelope (9280 J) and appropriate allowance in the bremsstrahlung shielding recommendations is given. The design dose rate depends upon occupancy and will be taken to be 2.5 μSv/h (0.25 mrem/h) where 2000 h/year is assumed. For

situations of limited occupancy, the assumed occupancy will be noted and the design dose rate given.

4.2.6.2.1 Primary Bremsstrahlung (PB)

4.2.6.2.1.1 Description

PB consists of photons with an energy spectrum that approximately follows a 1/E form (where E is the photon energy), with the maximum energy being equal to the storage ring particle energy. PB emerges in a very narrow cone about the particle beam path with a characteristic emission angle of γ^{-1} where γ is the ratio of total to rest mass energies of the electron (γ^{-1}=73 μrad). Hence, the PB beam will be, at most, a few millimeters in diameter anywhere along the beamline. The peak, energy-integrated gas bremsstrahlung dose rate from the insertion-device vacuum chamber was calculated (Job et al. 1994) by the semiempirical equation (Franck, 1988):

$$D = \frac{fN\ell\gamma^2}{\pi X_0 L(L+1)}$$

where:

D = total beam integrated dose rate for the gas bremsstrahlung in Sv/h, assuming a quality factor of one, which is standard for photons
f = an effective flux-to-dose conversion factor for bremsstrahlung photons = $3.0 \cdot 10^{-6}$ Gy/h • φ [φ = photon fluence rate],

N = the number of electrons for the beam current 300 mA = $1.8726 \cdot 10^{18}$ /s,
X_0 = $2.34 \cdot 10^{16}$ cm, radiation length of air at 10^{-9} Torr,
ℓ = effective length of the straight section = 1500 cm,
L = distance from the end of the straight section to the observation point = 2460 cm.

The peak energy-integrated PB dose rate is calculated to be 2.2 Sv/h (220 rem/h) in an unshielded ID beamline. The bending-magnet dose rate can be deduced by scaling by the appropriate effective straight-section length. This factor is approximately 33. The calculated values have also been compared with the measurements. The measurements so far show that the semiempirical predictions are conservative.

The initial calculation of gas bremsstrahlung power was made assuming static pressure in the vacuum chamber; however, subsequent studies have indicated that residual gas pressure is dependent on the electron current circulating in the storage ring (SR) (Pisharody 1998, Berkvens 2007). In addition, Monte Carlo particle-

matter interaction codes such as MARS (Mokhov) and FLUKA (Ferrari 2005) are now available to model the generation of photoneutrons (PNs) from processes initiated by high-energy GB photons. We can now more accurately model the PN dose. An effort was undertaken to use MARS to compare with dose rate estimates made previously using EGS4 (Dooling 2010). The results of the MARS simulations are summarized here for nominal operations at the safety envelope (7.0 GeV, 327 mA). We also assume a residual gas composition where Z_{eff}=4.0 with pressure of 1 nTorr measured at low beam current. The vacuum chamber pressure is assumed to scale linearly with current to 27 nTorr at 327 mA. This means we should expect a quadratic variation of GB power with SR beam current.

4.2.6.2.1.2 Mitigation

Personnel are protected from PB by the use of shutters, stops, collimators, enclosures, and beam pipes.

- Safety Shutters

  A safety-shutter system is located in the front end of all APS beamlines and can be closed by the APS or the user. When closed, the safety shutter allows essentially no PB to come through the ratchet wall penetration, making it possible for the user to access areas not otherwise protected from PB or synchrotron radiation (e.g., the inside of the FOE). Obviously, no experiments utilizing synchrotron radiation can be carried out while the safety shutters are closed. The composition of the safety shutters are covered in section 3.9.4.

- Bremsstrahlung Stops

  During experimental operations, the PB is contained by bremsstrahlung stops, which are an integral part of all beamlines. Typically, a stop consists of a cooled photon stop to attenuate the synchrotron beam and a block of lead or tungsten to stop the bremsstrahlung. The PB will scatter from both components and create SB, whose mitigation is discussed in the next section.

  An early APS technical bulletin (Job et al. 1994) details the calculations used to design bremsstrahlung stops at the APS. The Monte Carlo computer program EGS4 (Nelson et al. 1985) was used to track the various products of the shower through given targets; however the program did not account for production of PNs. In order to include the contribution from PNs, an assumption was made that this component was responsible for half the dose. More recent studies with the MARS code (Dooling 2010) have shown that for thick, heavy-metal targets, neutrons plays a larger role in the total dose. The subject of generated neutrons will be covered in the section on SB.

The results, which are reproduced in Figure 4.2, show that EGS4 works well when dose from the electromagnetic shower dominates; however, for thick stops, EGS and MARS results diverge. The divergence is due to the PN contribution included in the MARS simulations. The more recent simulations show the earlier conclusions that a tungsten block 18 cm thick or a lead block 30 cm thick reduce the dose rates to adequate levels are still valid with respect to the electromagnetic shower. The additional shielding and distance in the hutch mitigate the PN dose.

- Collimators

Collimators are used to keep the PB beam from directly striking the walls of enclosures or beam pipes. The dimensions and composition of a collimator are the same as for a bremsstrahlung stop, with a slot to allow the beam to pass through. A collimator is usually protected from the synchrotron beam by a cooled photon aperture.

Most beamlines at the APS will have monochromatic beam stations downstream of the FOE or a white-beam station. In these situations, a double-crystal monochromator (typically in the FOE) will usually be used to produce a monochromatic beam parallel to, but offset from, the white beam (and hence, PB). Downstream of the monochromator, the PB will be stopped inside the FOE, while the monochromatic beam is allowed to go downstream to the monochromatic station. Experimental concerns sometimes make it desirable to minimize the amount of offset between the white and monochromatic beams.

The scatter from a tungsten block comprising a bremsstrahlung stop and a monochromatic-beam collimator was studied to determine the adequacy of shielding (Job et al. 1994). Figure 4.3 is a schematic of such a stop/collimator. The pertinent distance for this study is not the separation of the white beam from the monochromatic beam but rather the separation between the farthest possible upward excursion of the white beam (PB extreme ray) and the bottom edge of the slot (assuming a positive vertical offset).

The code EGS4 was used to study a PB beam incident on a tungsten block 18 cm thick, 15 cm high, and 20 cm wide. The slot in the block was 4 cm horizontally, 1 cm vertically, and 9 cm from the bottom edge of the block. Three cases were studied, where the PB beam was 5 mm, 8 mm, and 10 mm below the bottom edge of the slot. The dose from each case was calculated for three locations in a real beamline application (the APS 1-ID beamline). These locations are shown in Figure 4.4. Table 4.11 gives the results for the three beam positions at each of the locations. For the “1” and “2” positions (shown in Figure 4.4), the assumption of 100% occupancy is too drastic, with 10% being a better, but still conservative estimate. With this occupancy assumption, a 10-mm offset is fully adequate in all calculated situations. For smaller offsets, the occupancy

will need to be limited to less than 10% or additional shielding will need to be added.

Figure 4.2 Peak Dose Rates recorded in 1 cc tissue phantoms at the Back of Thick Lead and TungstenTargets Due to the Incident Bremsstrahlung.

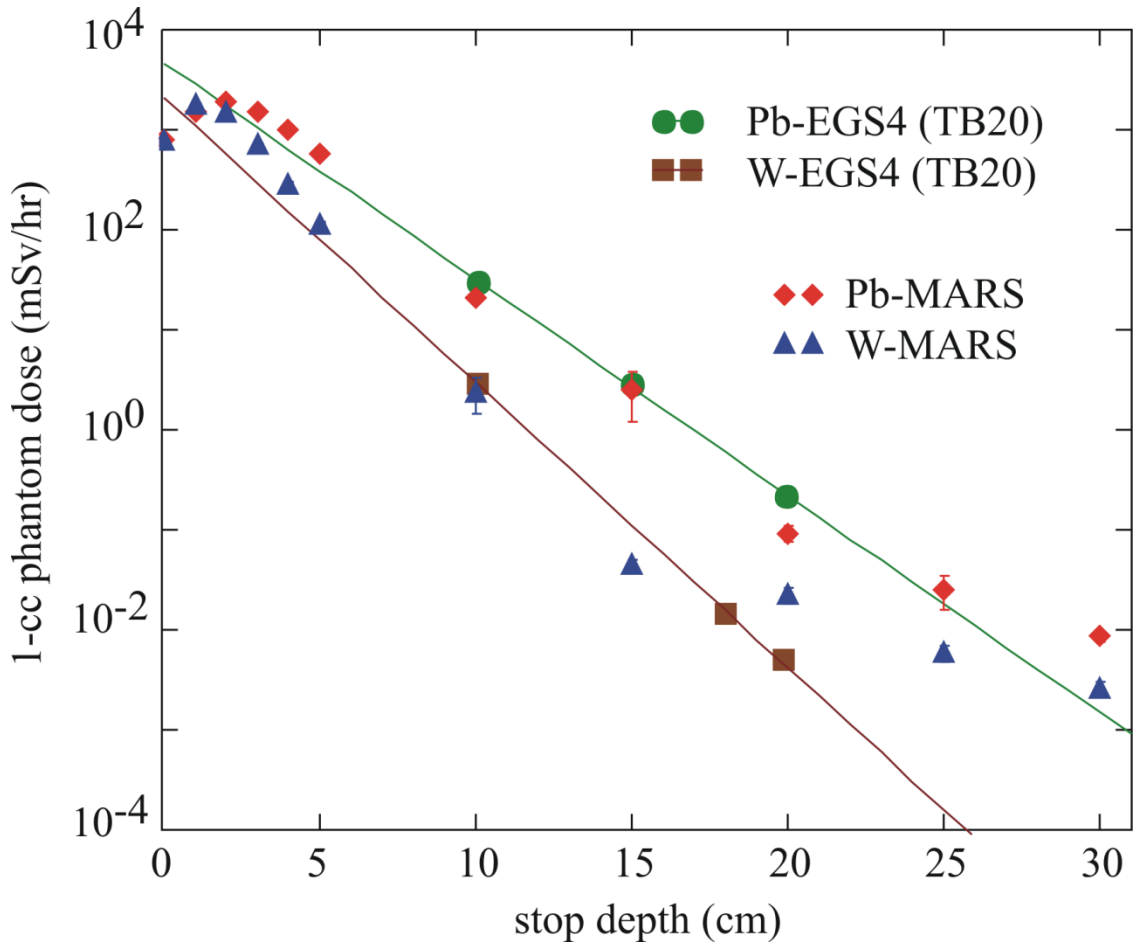

Dose rates at the back of the thick lead and tungsten targets due to the incident bremsstrahlung. The transverse dimensions of the solid block of metal are 20 × □20 cm^2. The 30-cm-thick tissue is at 30 cm from the downstream side of the target.

Figure 4.3 Diagram of the Mono-Beam Aperture and Bremsstrahlung Stop

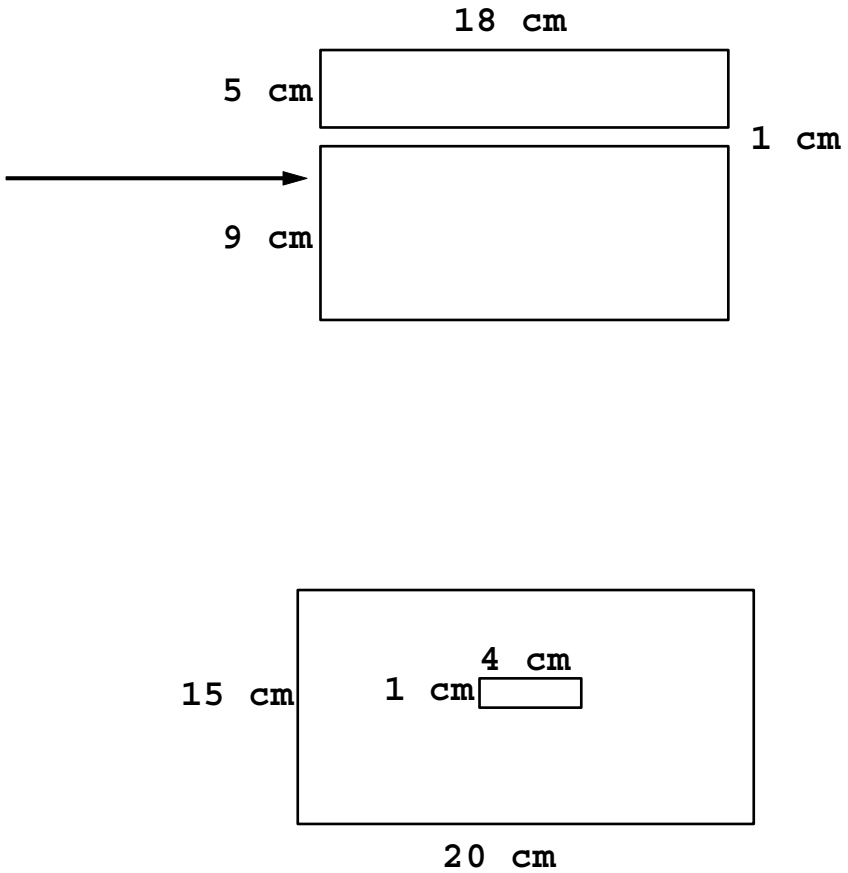

Diagram (side view and front view) of the mono-beam aperture and bremsstrahlung stop. This block is made of tungsten and is part of the integral shutter.

Figure 4.4 Diagram of the White-Beam Station of the 1-ID-B Beamline

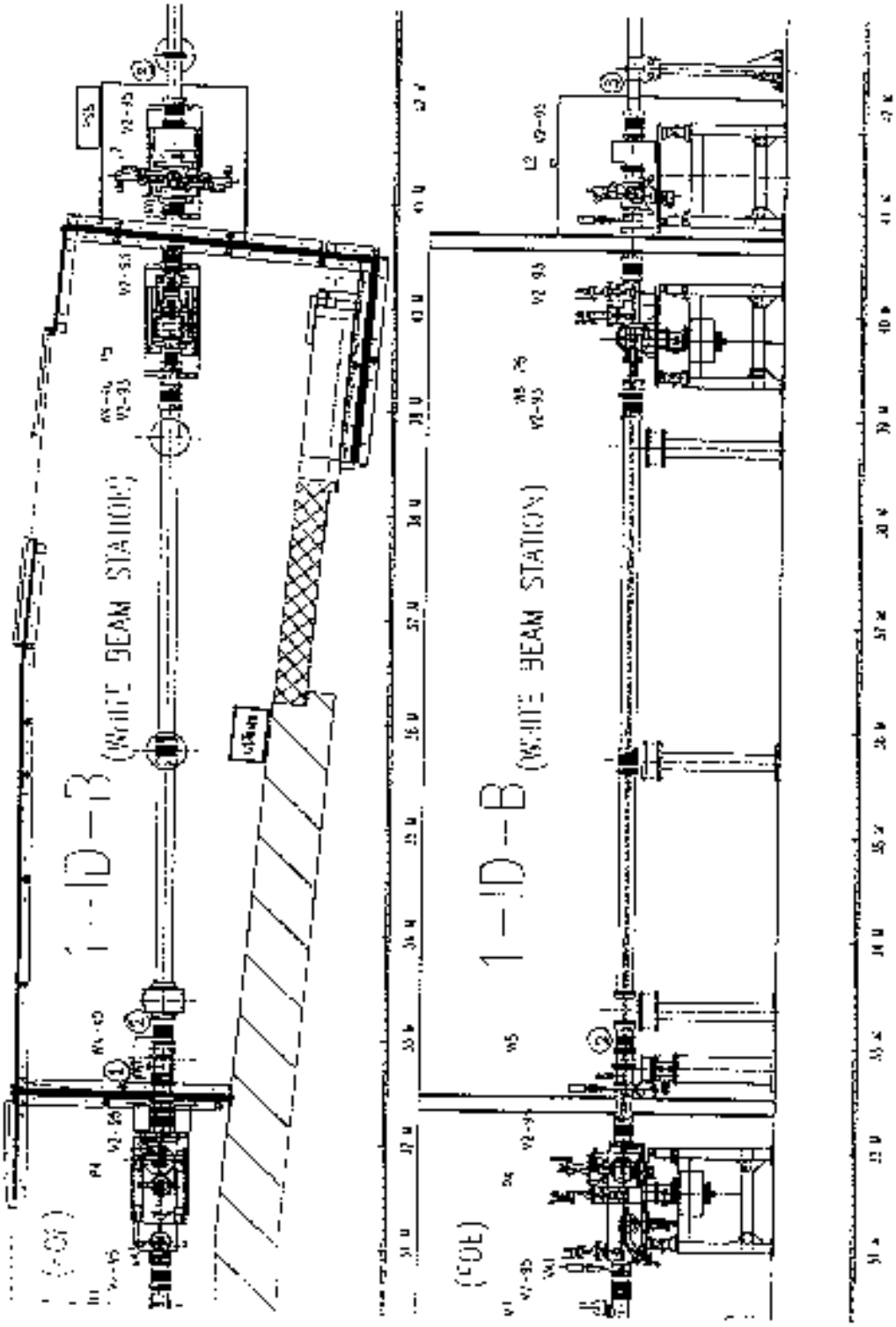

Table 4.11 Summary Results for the Mono-Aperture

Beam offset (cm)	Dose Rates (μSv/h) at the aperture	at the back * wall of FOE	in the † beamline	outside WBE ‡ on the pipe
0.5	300.0	37.5	27.2	0.64
0.8	200.0	25.0	18.2	0.43
1.0	100.0	12.5	9.1	0.21

* At the back wall of the FOE, in the white-beam enclosure (WBE), close to the beam pipe, position 1 in Fig. 4-4. The beam pipe is unshielded in this case.
† In the white-beam enclosure, right in the beamline, position 2.
‡ Outside the white-beam enclosure, on the beampipe, position 3. The beampipe is shielded by 8-mm lead.

In this study, there are some conservative a priori assumptions that should be noted. The PB will always have to go through a photon stop (typically a thick piece of copper) prior to striking the bremsstrahlung stop. Any beneficial effect of absorption by the photon stop has not been used in this study. Additionally, the PB beam is taken to be at the farthest extent of its range. The amount of time that the electron beam can be at the position to give rise to this situation is certainly well below the 100% assumed for this study.

- Enclosures, and Beam Pipes

  Enclosures or beam pipes prevent personnel from coming into contact with the PB beam. An enclosure or beam pipe is not used to stop PB directly but does prevent access to the beam. The SB generated by the PB is stopped by enclosures and beam pipes.

- Beamline Layout

  As an example for the general beamline layout, the upstream end of the XOR Sector 1 insertion-device beamline is shown in Figure 4.5 and Figure 4.6. Important components for PB protection are the stop/collimators (P4, P5) and the collimators (K1), as well as the white beam enclosures (1-ID-A, 1-ID-B). In Sector 1, the white- beam hutches are directly attached to the FOEs, alleviating the need for white-beam transport on the open experiment hall floor.

Figure 4.5 Layout of Equipment in 1-ID-B (Plan View)

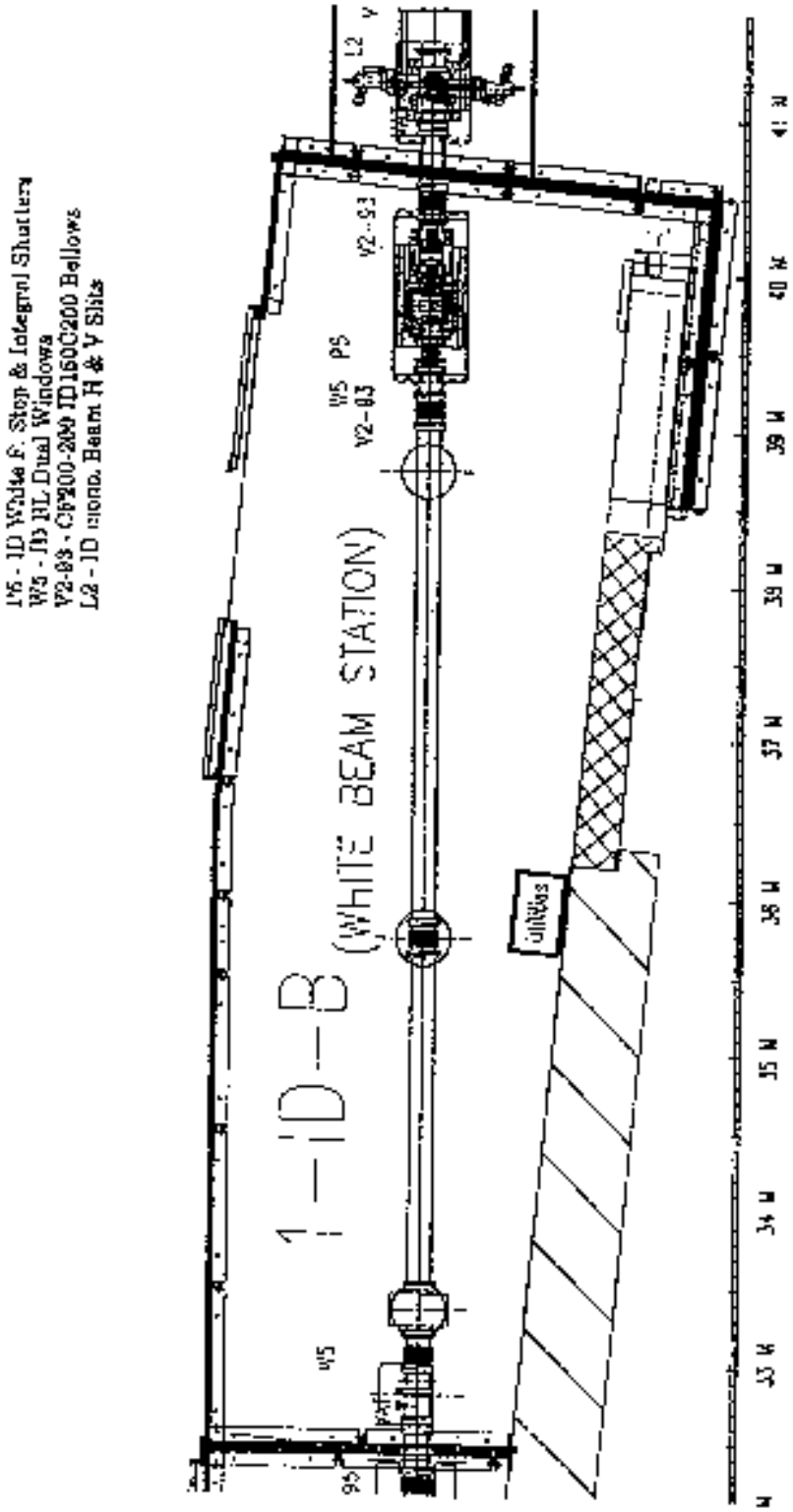

Figure 4.6 Layout of Equipment in 1-ID-A (Side View)

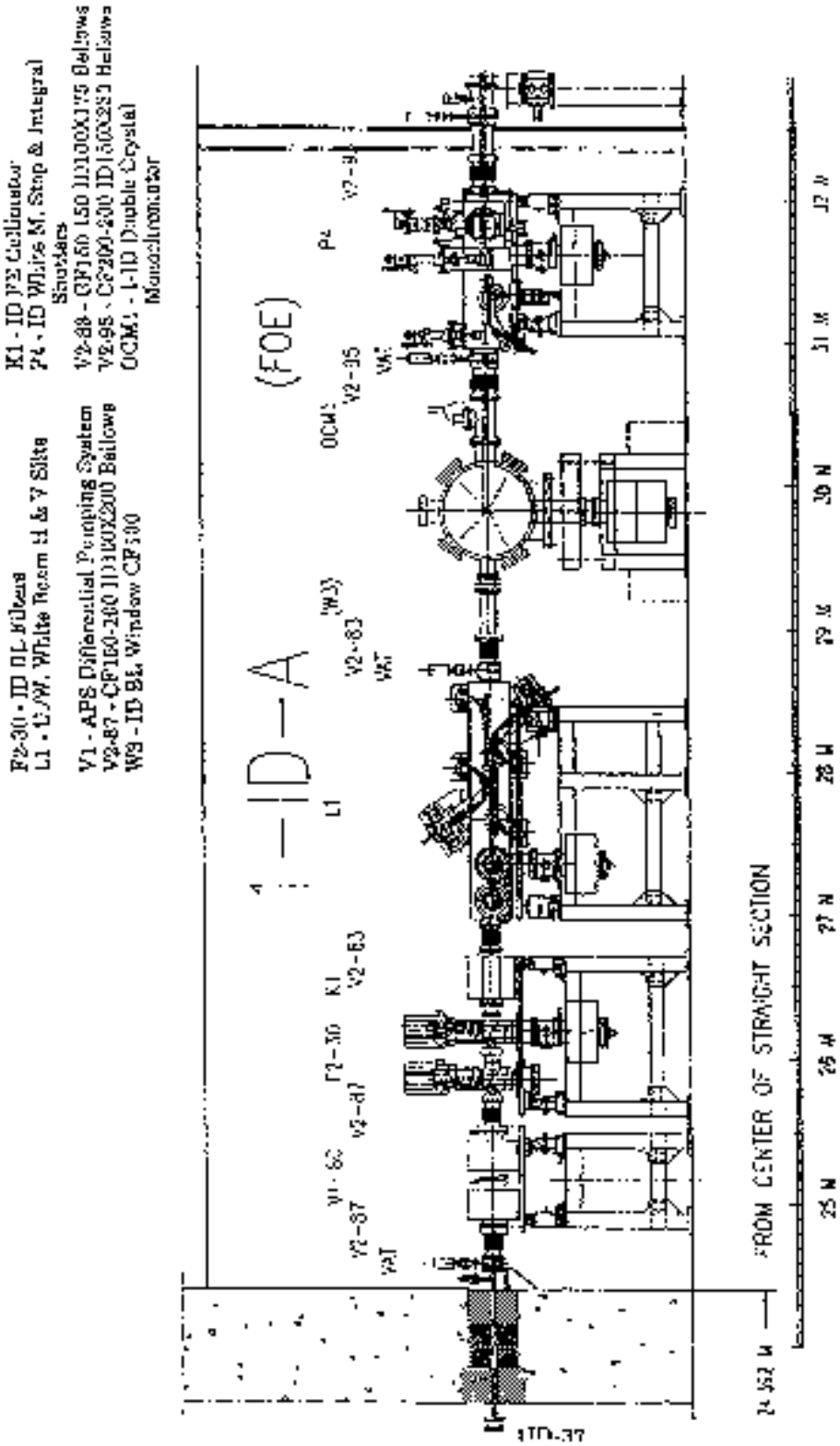

- Ray Tracing

  Bremsstrahlung ray traces for the Sector 1 ID beamline are shown in Figure 4.7 and Figure 4.8. The source size used for these traces is essentially the projection of the arc of the storage ring on the line of sight through the front ends. This is a very conservative assumption.

- Mirror as the First Optical Device

  Some APS ID beamlines (e.g., 2-ID) will use a mirror as the first optical component and then pass the resultant "pink" beam (because the high frequency components have been removed) downstream to an experimental station. The mirror in this situation separates the PB beam from the synchrotron beam and allows the PB to be stopped and the synchrotron beam to be passed downstream. In this situation, the separation between the PB beam and the synchrotron beam increases with distance downstream from the mirror (unlike the double-crystal monochromator setup described above where the two beams are parallel with a constant offset).

- White-Beam Transport

- The white-beam transport through the experimental floor requires collimators at definite intervals in the beamline to contain the PB depending on the bremsstrahlung ray tracing. These collimators may also require upstream and downstream collars to contain the SB (Job et al. 1994).

4.2.6.2.2 Secondary Bremsstrahlung

Secondary bremsstrahlung is created whenever a PB beam encounters matter. The variety of circumstances along a beamline where this can occur makes the determination and mitigation of SB somewhat complicated. In this section, several SB situations will be described and the measures taken to eliminate the hazard discussed.

The cases studied represent the broad class of SB problems that will arise during beamline operations.

4.2.6.2.2.1 Normal Incidence Copper Targets in FOEs

The technical bulletin ANL/APS/TB-7 (Ipe et al. 1993) gives an example of how to calculate the shielding for a 5-cm-thick block of copper placed at the upstream end of an ID FOE. The copper block is meant to represent a likely beamline component, such as a slit, shutter, or valve. The dose from such a target is strongly peaked in the forward direction, hence the worst-case situation is for the target placed as far upstream as is practical. In TB-7, the maximum dose determined for the downstream

wall (also calculated using EGS4), just out of the shadow of the beam stop is found to be 56.2 mrem/h. Modeling the same geometry in MARS (Dooling 2010), a dose rate of 31.0 mrem/hr is determined. In both cases, the dose is due almost entirely to the electromagnetic shower components. The PN dose in TB-7 is calculated to be 0.0036 mrem/hr; whereas MARS predicts a level of 0.0225 mrem/hr.

Figure 4.7 Bremsstrahlung Ray Trace (Horizontal)

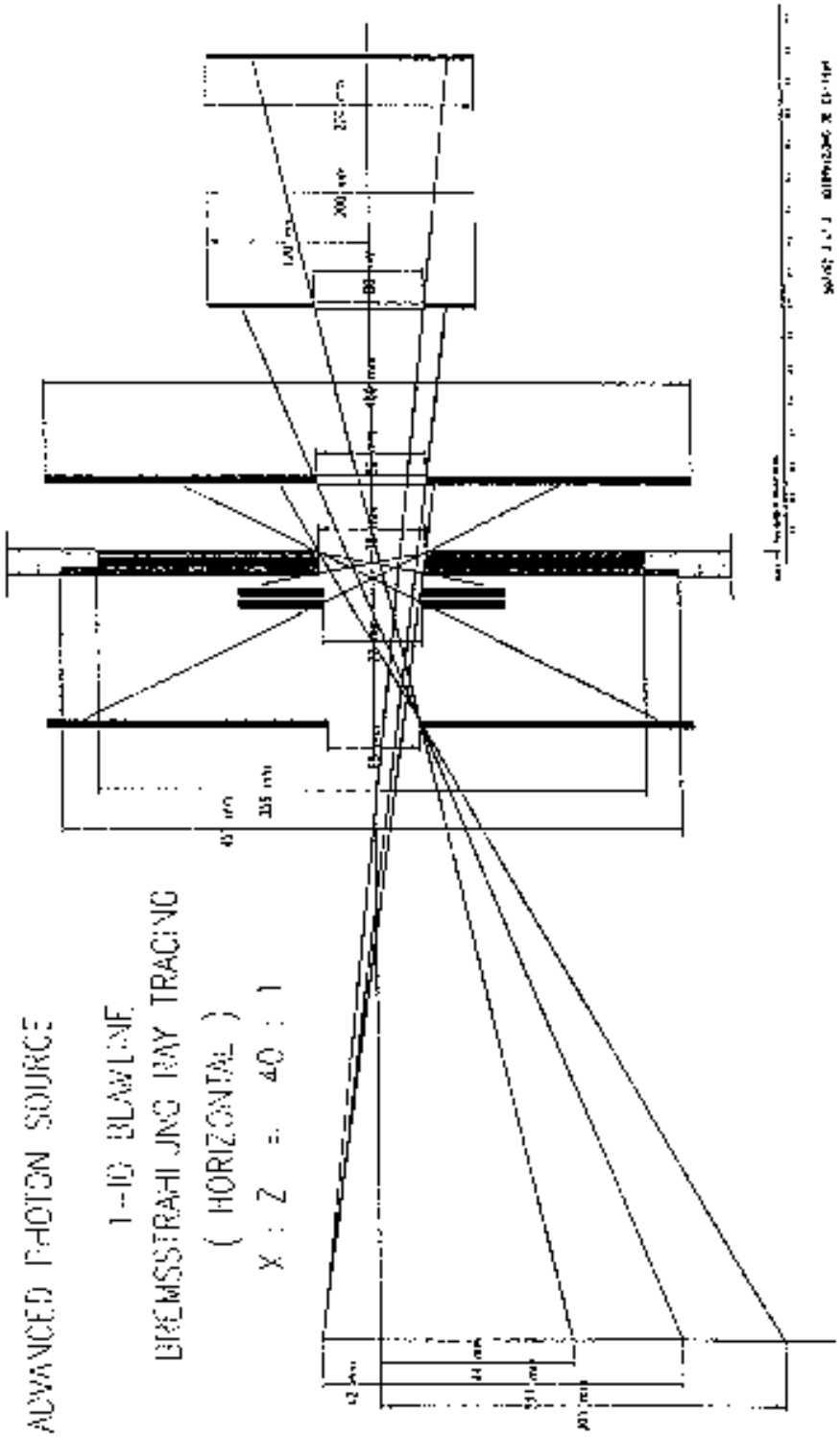

Figure 4.8 Bremsstrahlung Ray Trace (Vertical, Monochromatic Beam)

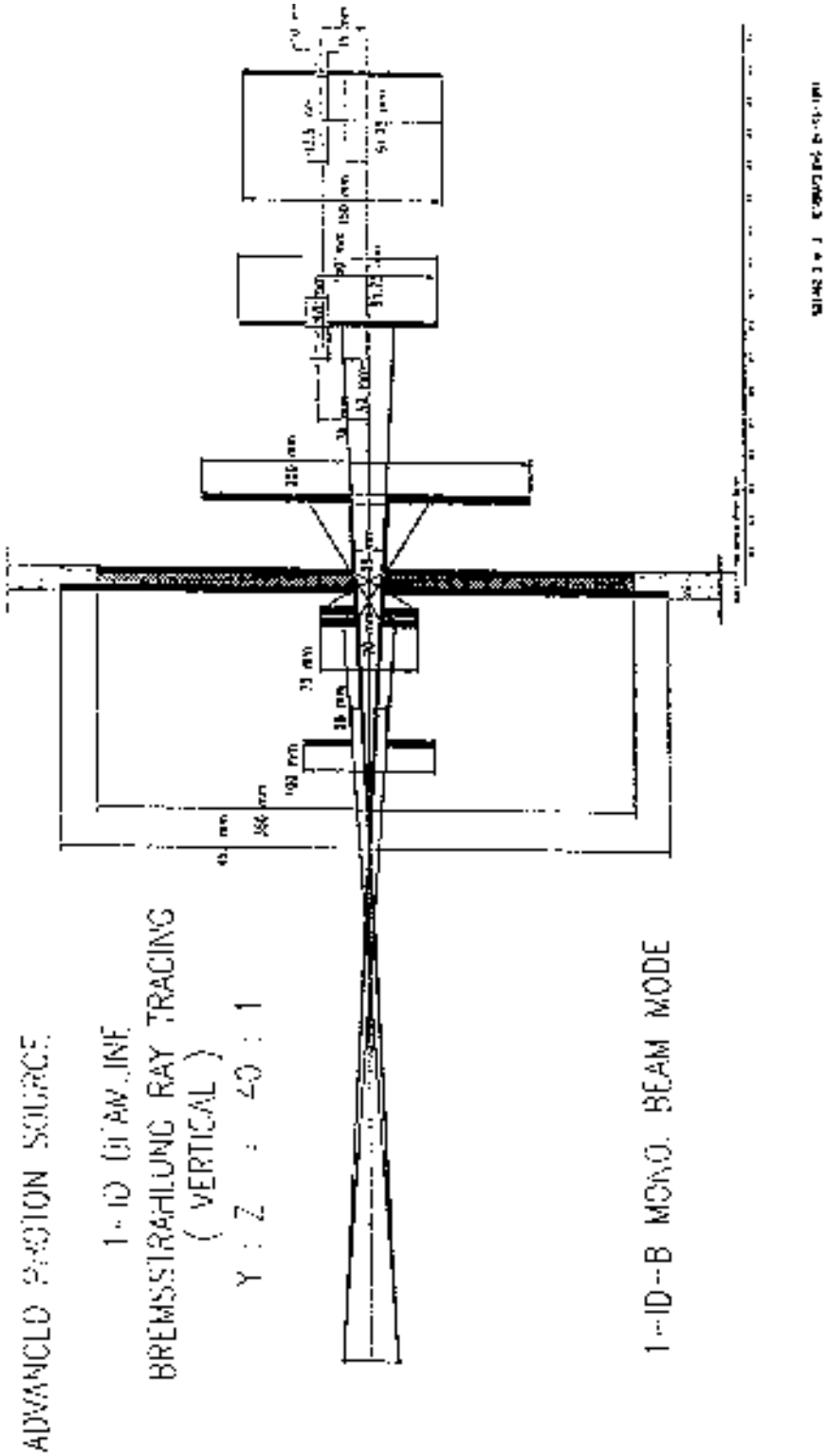

The dose rate from the copper block was calculated as a function of angle using EGS4, and then a simple absorption formula was used to calculate the required lead thickness. The conclusion of this study was that the downstream wall of the FOE needs 100 mm of lead in an area 1 m^2 around the PB direction and 50 mm of lead for the rest of the wall. For the lateral wall and ceiling, the lead required for SB is less than that needed to shield for synchrotron radiation.

For bending-magnet beamlines, the results for the ID beamline were scaled by the effective length of the straight sections (i.e., 15 m for the ID and 0.234 m for the bending magnet). It was then found that the SB determines the shielding only for the downstream wall in an area 1 m^2 around the PB direction where 24 mm of lead is required (Ipe et al. 1993).

4.2.6.2.2.2 Bremsstrahlung Stops

The SB dose produced by a PB beam striking a lead bremsstrahlung stop is shown in Figure 4.9 (Job et al. 1994). The scattering from tungsten is similar. The only significant electromagnetic doses are from back scatter (i.e., in the upstream direction from the bremsstrahlung stop). For stops located inside FOEs or white-beam enclosures, the combination of distance and the shielding needed to reduce the dose from synchrotron radiation adequately reduce the SB dose. Bremsstrahlung stops are one of two main sources of PNs in the hutch. The other source, i.e., shallow angle scattering from white beam masks placed upstream in the FOE, is discussed in section 4.2.6.2.2.7.

4.2.6.2.2.3 Shallow angle scattering

The SB generated when PB strikes a mask or mirror presents a different set of challenges than the SB from a normal-incidence target. An analysis of the shielding for the mirror in the XOR 2-ID beamline is given in technical bulletin ANL/APS/TB-21 (Yun et al. 1995).

The SB scatter from a glancing-incidence target, such as a mask or mirror, is significantly different than that from a normal-incidence target. EGS4 was used to calculate the SB for the mirror geometry shown in Figure 4.10. Calculations were made for two different mirror substrates: silicon and copper. It was found that the Si substrate produced considerably more scatter than a Cu one. In both Si and Cu, the depth that the PB beam travels is adequate to allow an electromagnetic shower to fully develop, but the absorption of the SB scatter in the silicon is smaller. This is a general trend that should hold for other materials, i.e., mirrors made of light materials are expected to produce more scatter than those made of heavy materials. Because mirrors are replaceable items, shielding should be designed for a substrate made of a low-Z material. The calculated SB from a Si substrate hit by a PB beam at an incidence angle of 0.15º is shown in Figure 4.11 and Figure 4.12.

Figure 4.9 Dose Rates Due to the Back Scattering of the Bremsstrahlung from a Thick Lead Target

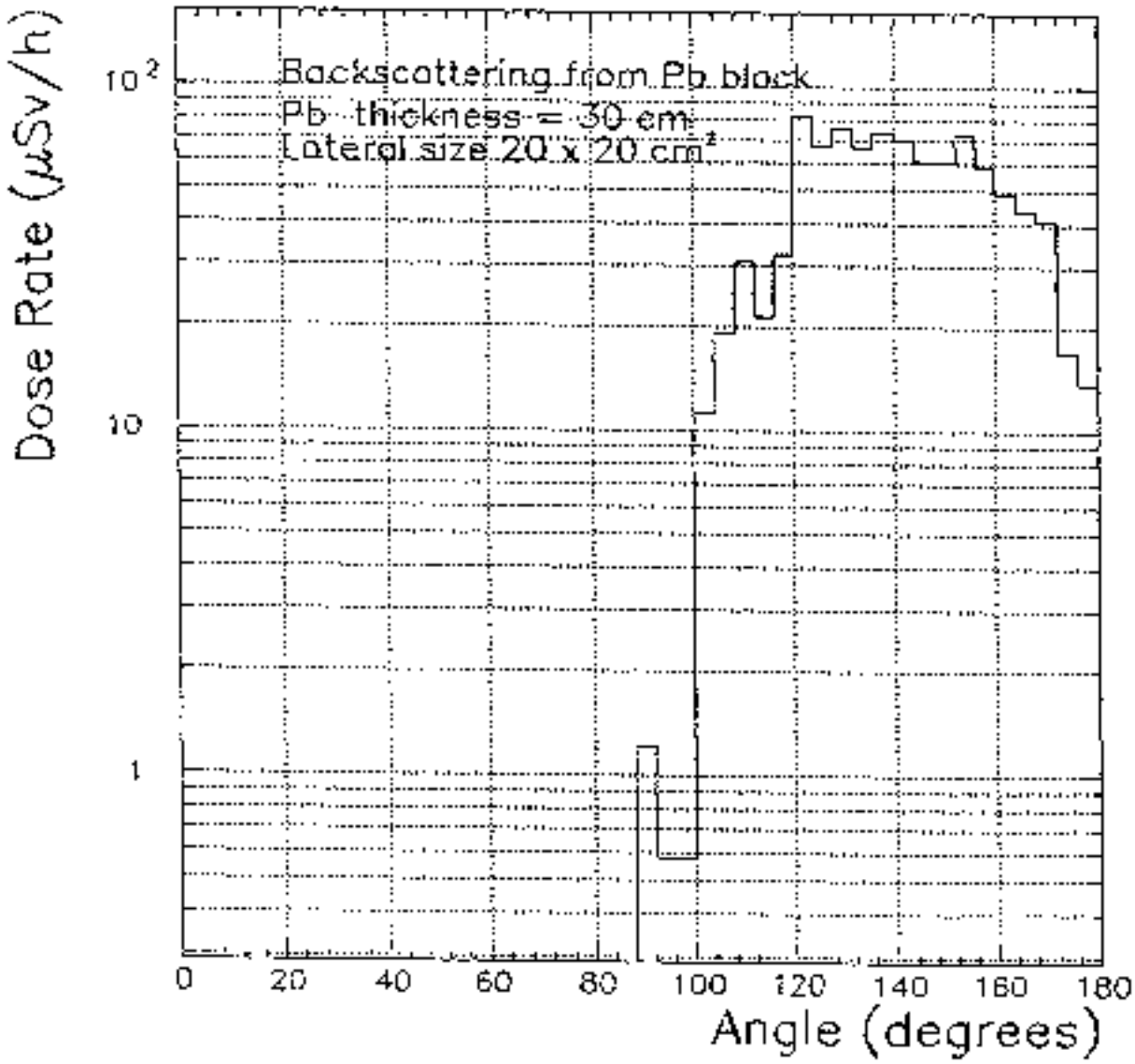

Dose rates due to the backscattering of the bremsstrahlung from a thick lead target. The integrated dose over the azimuthal angle is given.

Figure 4.10 Schematic of the Geometric Parameters of the Si Mirror Considered for Beamline Shielding

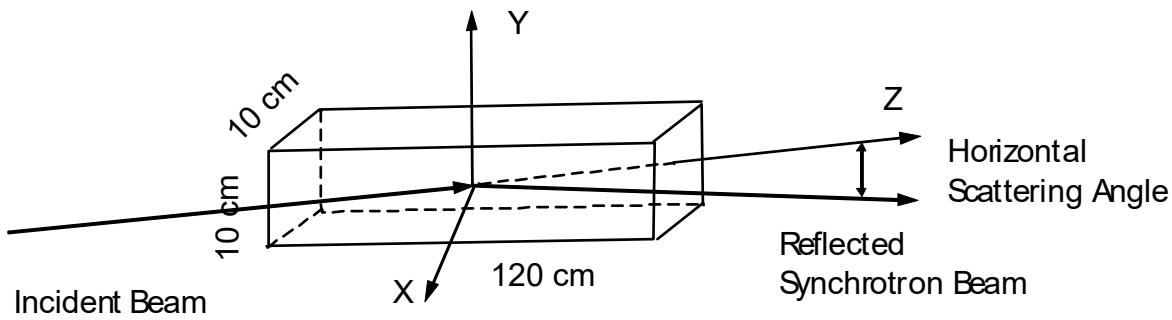

Schematic of the geometric parameters of the Si mirror considered for beamline shielding and the coordinates used in this report. The Z axis is along the direction of the primary BR.

Figure 4.11 The Results of EGS4 Calculation for SB from a Si Substrate Hit by a PB Beam at an Incidence Angle of 0.15° (Vertical View)

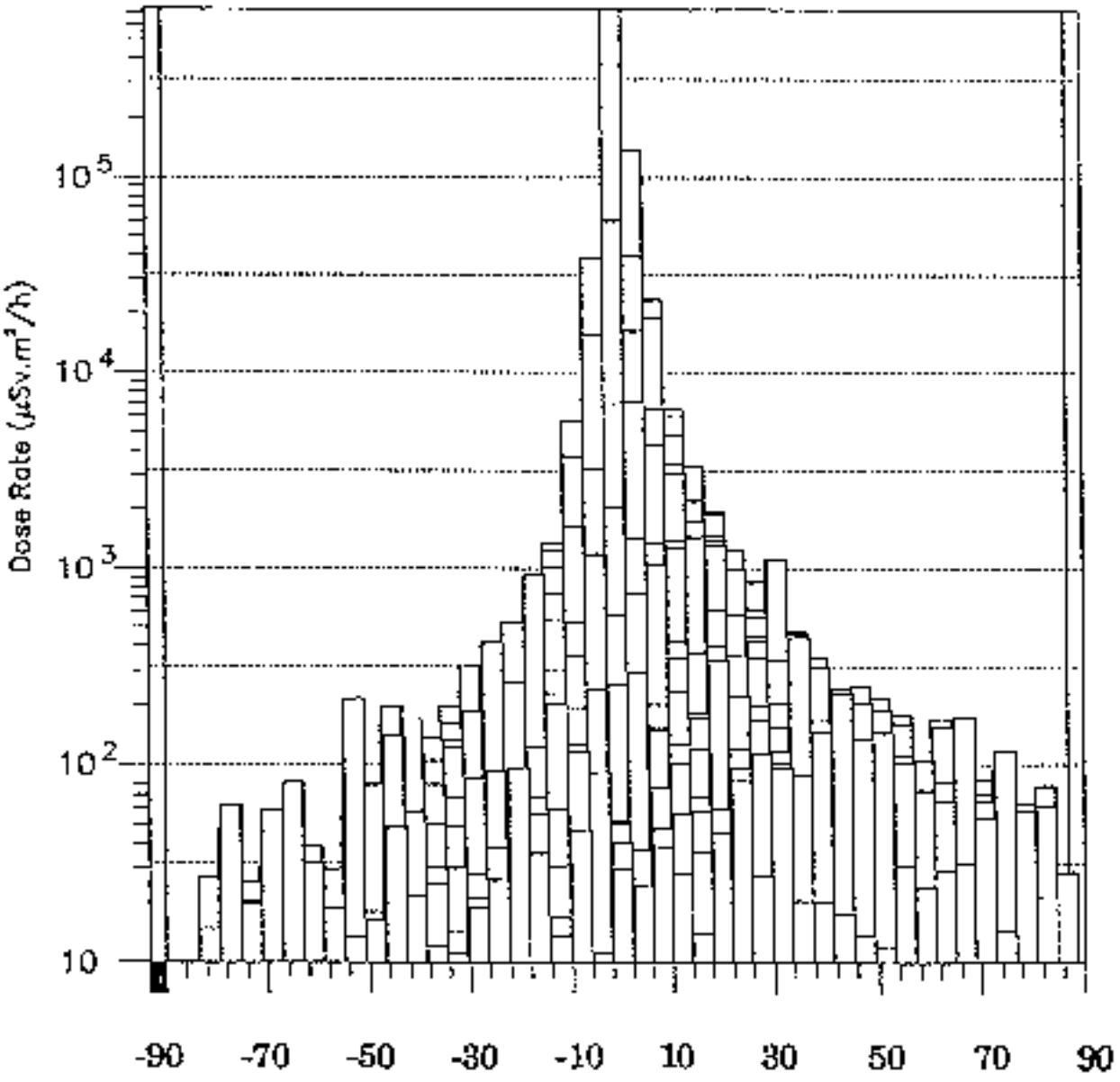

Figure 4.12 The Results of EGS4 Calculation for SB from a Si Substrate Hit by a PB Beam at an Incidence Angle of 0.15° (Horizontal View)

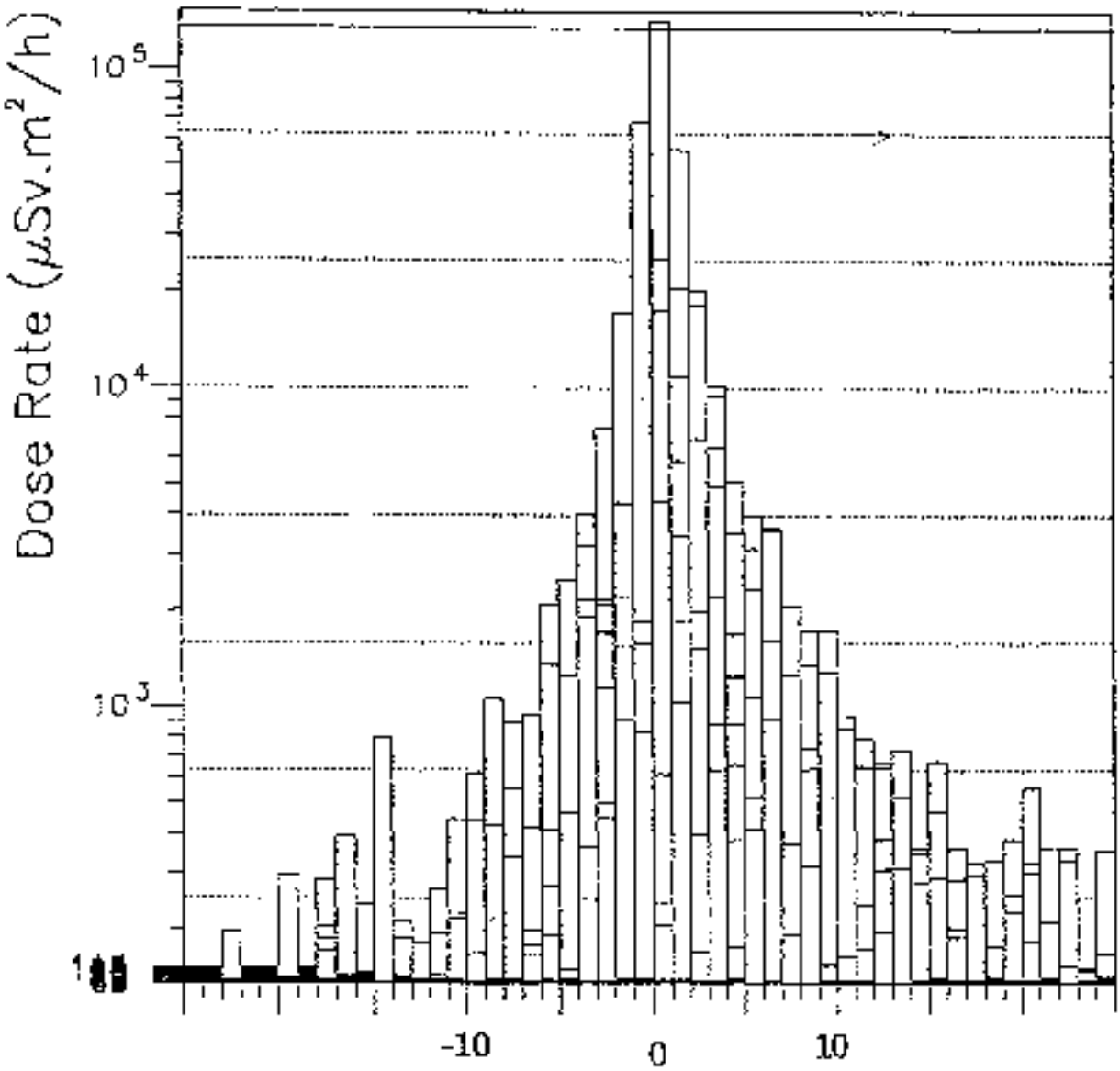

As discussed above, the synchrotron beam separates from the PB beam at an angle that is twice the incident angle. Unless the synchrotron beam is redirected by another optical device, some of the SB will travel with the synchrotron beam. The shielding for this situation must be tailored for the specific beamline situation, involving tight collimation and an additional shielding collar around the downstream beam pipe.

4.2.6.2.2.4 Beam Pipes

For a beamline with white-beam transport on the open experiment hall floor, SB can normally occur in two ways, 1) by striking a component such as a slit or the beam pipe itself, or 2) by hitting gas molecules inside the beam pipe. In the first case, ray traces are used to determine where the PB beam may encounter solid objects and appropriate local shielding (e.g., shielded cabinets) is added. Proper collimation of the PB beam can substantially reduce the area where SB can be generated.

Interaction of the PB beam with gas in the beam pipe produces a negligible dose on the beampipe, even when the gas is at atmospheric pressure (Job et al. 1994).

4.2.6.2.2.5 Collimators

Secondary bremsstrahlung is generated when PB encounters a collimator on the open experiment hall floor. The technical bulletin ANL/APS/TB-20 (Job et al. 1994) addresses this issue. The worst case for this situation is shown in Figure 4.13. The dose from this geometry was calculated with EGS4, with the results shown in Figure 4.14. Table 4.12 gives the additional shielding needed on the downstream side of the collimator to reduce the dose to acceptable levels.

4.2.6.2.2.6 Shielded Cabinets

A calculation of shielding for cabinets that are used to cover components on the open experiment hall floor can be made following the same procedure as that described above for targets in FOEs. The distances from target to walls must be scaled appropriately.

4.2.6.2.2.7 Bremsstrahlung-Generated Neutrons

When the PB interacts with high-Z materials in the beamline, neutrons are produced. These neutrons are collectively referred to as photoneutrons.

Figure 4.13 Diagram of the Configuration Used for the EGS4 Calculation

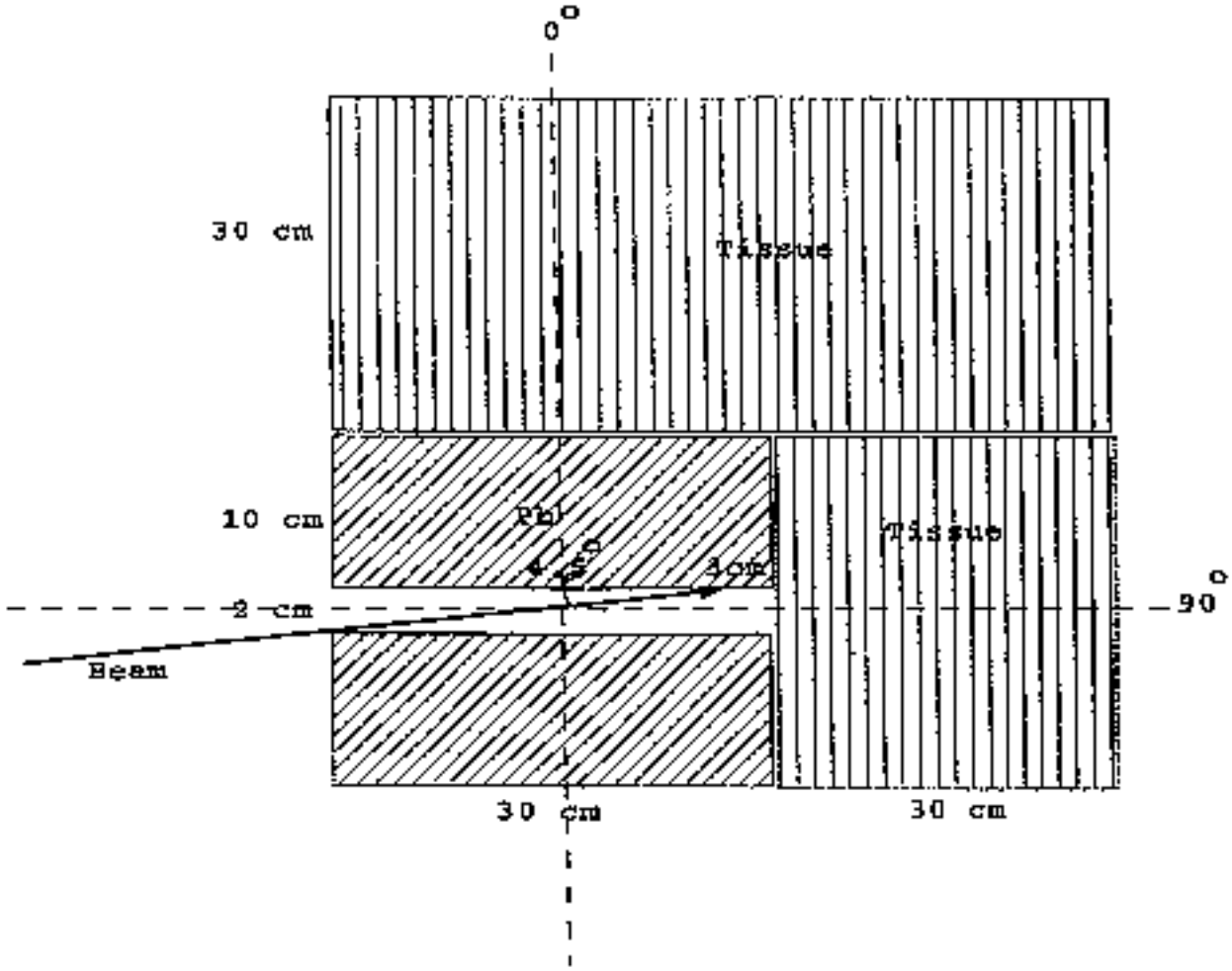

Diagram of the configuration used for the EGS4 calculation to estimate the dose rates on the beam pipe due to the missteered beam hitting the downstream edge of the collimator. The beam is incident at an angle of 4.5° and is 3 cm away from the edge. This allows the electromagnetic shower to fully develop.

Figure 4.14 The EGS4 Results for the Dose Rates in Tissue Due to the Beam Hitting the Downstream Edge of the Collimator

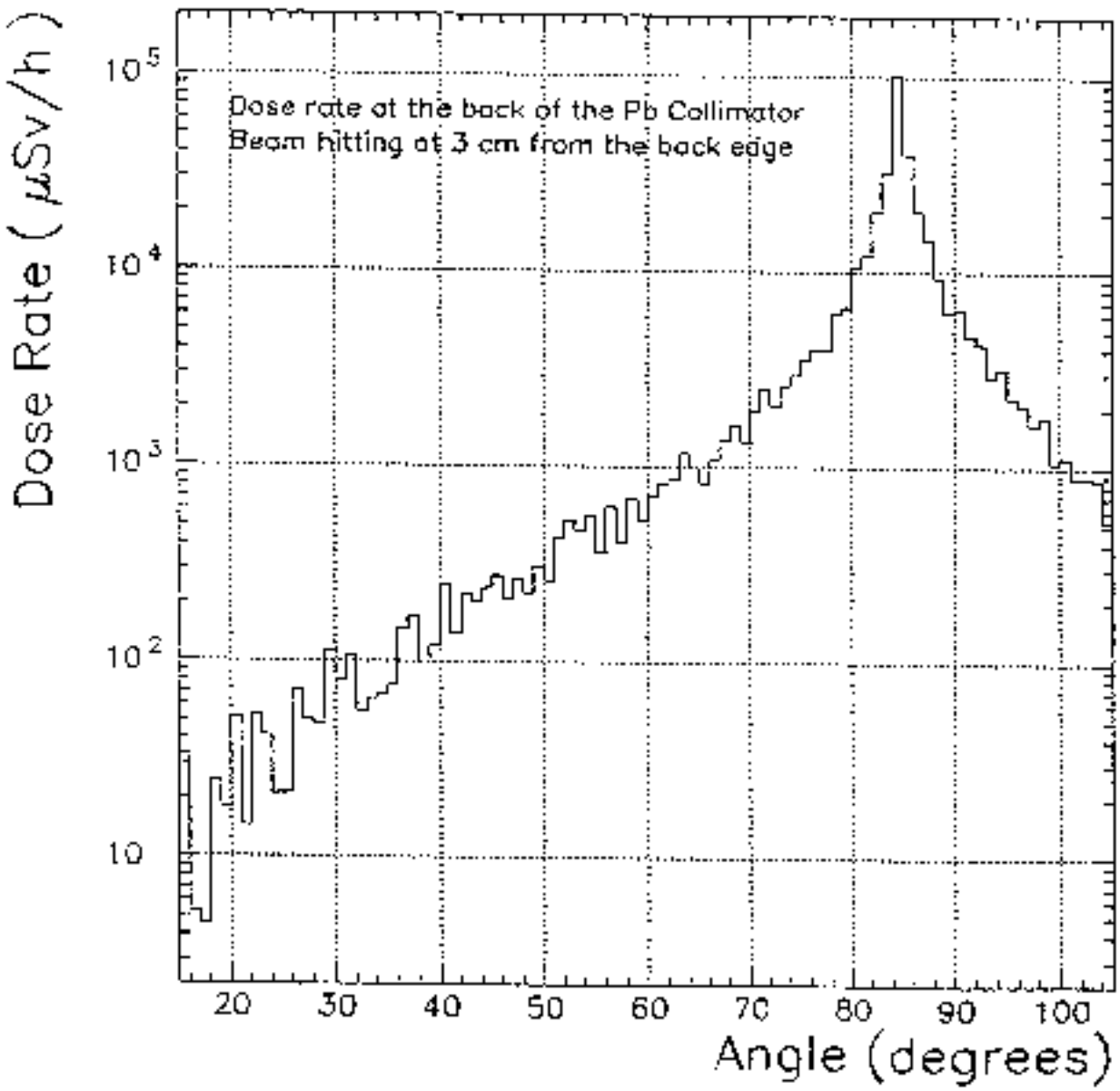

The EGS4 results for the dose rates in the tissue due to the beam hitting at the downstream edge of the collimator. The tissue is in contact with the collimator. In this plot the 90° angle is the beam direction.

Table 4.12 Thickness of the Collar for the Collimators

Distance from * the collimator	**Thickness of † lead collar**
0.0 cm	4.9 cm
10.0 cm	3.4 cm
15.0 cm	2.6 cm
20.0 cm	1.8 cm
25.0 cm	1.8 cm
47.0 cm	1.3 cm

* The missteered beam hits close to the downstream edge of the collimator. The distance is from the downstream edge of the collimator.

† In calculating the thickness 'the angle of incidence effect' has been taken into consideration.

The maximum total dose rates from GB radiation on a tungsten bremsstrahlung stop, including the contribution from the PNs, are presented in Table 4.13. These dose rates are determined at the accelerator safety envelope using the MARS code with differing masks present in the FOE. The masks present shallow angle targets to the GB. The MARS FOE model does not include additional mitigating factors such as collimators and local shielding since these are reconfigurable from hutch to hutch; therefore, the MARS results should be conservative.

Table 4.13 Maximum Total Dose Rates on contact with the FOE wall at the Accelerator Safety Envelope†

Location/mask config.	No mask	4.5 mm square	4.5 mm square and 3 × 2 mm rect.
Side wall (μSv/h)*	2.37	2.43	7.07
Back wall (μSv/h)*	1.18	10.78	17.67
Roof (μSv/h)*	1.11	1.54	3.48

†Additional local shielding may be required for operation at the safety envelope
*multiply μSv/h by 0.1 for mrem/h

Dose rates outside an ID FOE have been measured at 150 mA; these measurements indicate a PN dose rate of 16 μrem/h 30 cm from the in 35-ID-A. The relevant entry in Table 4.13 for this measurement is found in the Side wall rwo for a single 4.5 mm square mask. We expect the dose rat to vary quadratically with current; thus at 327

mA, 16 μrem/h becomes 76 μrem/h or 0.76 μS/h. This is approximately one-thrid of the dose rate estimated by MARS.

4.2.6.3 Synchrotron Radiation

The primary purpose of the APS is to produce high quality synchrotron radiation. This raises some radiation-hazard issues that will be addressed in this section. Synchrotron radiation at the APS falls into two categories: insertion-device (ID) radiation and bending-magnet radiation. For synchrotron-radiation calculations, a storage ring energy of 7.5 GeV and a storage ring current of 200 mA have been assumed in all cases. These parameters were chosen for the simulation of the synchrotron radiation because they proved to be a worse case than the 7.0-GeV, 300-mA case. In addition, to accommodate operation at the accelerator safety envelope, the recommended shielding thicknesses include an additional tenth value layer of the shielding material.

The specifications for bending-magnet radiation are straightforward, as it is defined by the storage ring energy and current. The ID radiation is harder to define, because of the ability to use different IDs (i.e., wigglers, undulators), and to change the gap of an ID once installed. It is an APS policy to use the spectrum for the APS Wiggler A at a gap of 21.5 mm for all ID synchrotron-radiation shielding analyses. Wiggler A at this gap is taken as the worst likely operating condition. Exceptions to this policy, when warranted, are explicitly noted.

Undoubtedly, situations will arise at the APS where creative use of x-ray optics produces beams that do not fall cleanly into one of the categories described above. An example of this would be the use of multilayers to produce a wide-energy bandpass beam. In these situations, a safety analysis will be made to ensure that the various aspects of the beamline (i.e., stops, shutters, transport, enclosures) are adequate to mitigate the radiation hazard. This analysis will be made using the same basic tools, such as PHOTON (Chapman et al. 1988, Braeuer and Thomlinson 1988), that were used for the studies that are discussed below.

The mitigation of synchrotron radiation hazards will be discussed in two parts: direct synchrotron radiation and scattered synchrotron radiation.

4.2.6.3.1 Direct Synchrotron Radiation

4.2.6.3.1.1 White Beam

An unmodified white beam is always coincident with the primary bremsstrahlung beam. The steps that need to be taken to handle the PB are much more than adequate to stop the synchrotron white beams. Usually, a photon stop will be used to protect the bremsstrahlung stop from the heat carried in the synchrotron beam. As in the PB

case, personnel are prevented from placing themselves into the white beam by enclosures or beam pipes.

4.2.6.3.1.2 Monochromatic Beam

For the purposes of radiation safety analyses, a monochromatic beam is defined as a beam with an energy bandpass ($\Delta E/E$) of 0.1% and includes all the higher harmonics of the beam (i.e., if a 111 Bragg reflection produces a diffracted beam at 8 keV, the 222 will give a beam at 16 keV, the 333 at 24 keV, etc.).

- Stops/Shutters

  At the APS, shutters are always redundant; that is, there are two blocks of shielding material that are actuated with independent mechanisms whenever a shutter is closed or opened. The status of each block will be monitored by two or more limit switches for additional security. Any fault read by the limit switches will cause the PSS to trip. For a stop, which by definition is not moveable during operations, only one block of material is used. (A stop may have its position changed during a change of "mode," in which case it is controlled through use of Kirk keys or similar lockout devices.)

  For routine operations, both blocks of a shutter system are assumed to be in place and the dose must be limited to less than 2.5 µSv/h (0.25 mrem/h). In an abnormal situation in which only one block is providing protection, a conservative occupancy factor of 10% is assumed and each block must be capable of reducing the dose rate to 25 µSv/h (2.5 mrem/h) by itself.

- Transport

  If a monochromatic beam hits the wall of a beam pipe, the shielding for the beam pipe is much more than sufficient to stop the direct synchrotron beam. This is due to the large increase in effective thickness of the shielding when the beam hits the shielding at a glancing angle.

- Enclosures

  Bragg-scattered beams will be scattered out of the beam path and hit the sides of an enclosure on a regular basis. However, for angles greater than a few degrees, the radiation in these beams is relatively soft (< 50 keV) and will not make it through the shielding present for Compton-scattered photons.

4.2.6.3.1.3 Mirror-Modified Beam (Pink Beam)

- Stops/Shutters

  Mirrors essentially work as low-pass beam filters. Downstream of the mirror, the number of photons in the beam with energies above the mirror's energy cutoff (typically 20 keV, rarely above 30 keV), will be reduced by several orders of magnitude. The exact amount of shielding needed depends upon the minimum possible refection angle from the mirror and will be calculated for each case.

- Transport

  The same comments for the pink-beam stops/shutters apply to the transport.

4.2.6.3.2 Scattered Synchrotron Radiation

The direct synchrotron radiation traveling down a beamline will scatter from every component it strikes. For the purposes of this discussion, scattering is considered to be inelastic scattering; i.e., it does not include Bragg scattering. To determine the necessary shielding for the scattered synchrotron radiation, the PHOTON program was used.

PHOTON calculates doses using the following procedure:

1. Calculate the photon flux as a function of energy and vertical opening angle of the synchrotron beam.

2. Attenuate the beam for any filters.
3. Scatter from a chosen target.
4. Convert the resulting photon flux to dose.

Within PHOTON, several assumptions are made.

- The scattered photons are assumed to come from Compton scattering. With regards to shielding, only relatively high-energy photons (> 50 keV) are of much consequence. For these photons to scatter at significant angles (i.e., to hit the side of a hutch), Compton scattering is by far the dominant process.

- In PHOTON, an isotropic point scatterer is assumed and the total angle-integrated Compton cross-section is used to calculate the scattered photon spectrum. The isotropic-point assumption is reasonable for measurements well away from the source. This is true for most cases in beamline shielding (transport is an exception). In fact, Compton scattering is not isotropic; the scattering becomes increasingly forward directed for higher energies. This assumption will

tend to overestimate the scattering at large angles and underestimate the scattering in the forward direction.

- Additionally, no polarization dependence of the incident beam is recognized. Because the synchrotron beam is normally highly polarized in the horizontal plane, the horizontal scattering will be overestimated and the vertical scattering underestimated (especially at angles approaching 90°). Because personnel are usually located in the horizontal direction from the scattering source, the omission of polarization dependence becomes a conservative estimate.

- The "narrow-beam" attenuation coefficient of the shielding material is used. This will ignore build-up factors of scattered photons. For photons up to several hundred keV shielded by lead, the use of the narrow beam coefficient will have a small effect on the calculation.

- Finally, PHOTON calculates the flux for a bending-magnet source. This can be used to approximate a wiggler by multiplying the spectrum by the number of poles (twice the number of periods). This overestimates the horizontally off-axis flux. The PHOTON2 program is a modified version of PHOTON that calculates the wiggler spectrum using the proper wiggler horizontal beam distribution. A comparison of the results is shown in Figure 4.15. PHOTON2 (Dejus et al. 1992), at the time of these calculations, could not do all the shielding estimates that are part of PHOTON. Therefore it was only used for comparative purposes.

Figure 4.15 Comparison of PHOTON and PHOTON2 Spectrums for the APS Wiggler A

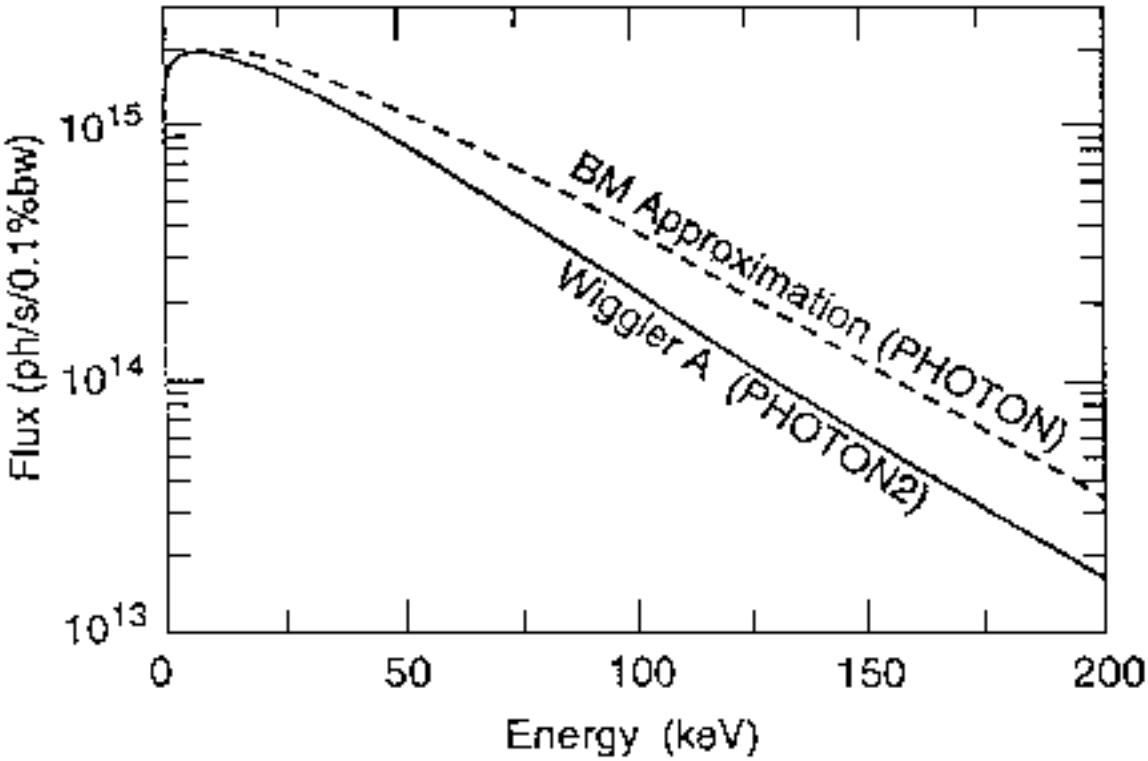

The combination of all these factors indicates that use of PHOTON should overestimate the scattering in the horizontal plane from a wiggler. Experimental results confirm this (Braeuer and Thomlinson 1988).

4.2.6.3.2.1 Experiment Station Enclosures

PHOTON was run for three targets (air, copper, and lead), with several thicknesses for each. Based on the results, a target of copper 30 cm in length was chosen to be representative. (The scattering from 3-cm and 30-cm targets was essentially the same.) The modeled experimental enclosure had the scatterer 1 m from the walls (lateral, upstream, and downstream) and 1.5 m from the roof. Because of the PHOTON assumptions discussed above, the scatter in the forward direction (toward the downstream wall) may be underestimated. To account for this, the amount of shielding needed to reduce the dose an order of magnitude (one tenth value layer), was calculated and added to the specification for shielding of the downstream wall.

4.2.6.3.2.2 Transport

PHOTON was used to calculate two scenarios for beamline-transport shielding: air scattering due to loss of vacuum and the scatter from the beam hitting a solid object (including the beam pipe).

The vacuum-loss calculations were made with the equivalent 30 cm of air at 1 atm as a target. The beam pipe was assumed to be 10 cm in diameter. Under normal conditions, negligible scattering will result from residual air in an evacuated beam pipe. However, because the vacuum level for beamline transport will not normally be part of the personnel safety system, the accidental venting of a beamline must be considered.

It is highly probable that a vacuum loss will be detected after a short time because of the resulting diminished flux to the user. In any case, significant scattered radiation will be found by periodic beamline radiation surveys. Using an estimated 10% occupancy in a vacuum loss situation leads to a design limit of 25 μSv/h (2.5 mrem/h).

For beamline transport, if ray tracing shows that the beam will not strike a solid object, only the vacuum-loss shielding is necessary. Where a solid object may be encountered, the experimental enclosure results (given above) can be scaled to determine the appropriate shielding.

4.2.6.3.2.3 Shielding Recommendations

- White Beam

  ANL/APS/TB-7 (Ipe et al. 1993) gives shielding recommendations for a model FOE. Many white-beam enclosures closely resemble this situation and can use the recommendations directly. For enclosures that differ significantly, the analysis for the model FOE can be easily modified using different scatterer-wall distances. The following specifications are for the model FOE.

  For ID white-beam enclosures, the shielding of the downstream wall is determined by bremsstrahlung. The PHOTON analysis of the synchrotron radiation shows that a lead thickness of 16 mm and 12 mm for the lateral wall and roof, respectively. In ANL/APS/TB-7, an additional 3 mm of lead is added to the lateral wall for a safety margin, leading to a recommended value of 19 mm of lead for lateral walls. If the upstream wall of the enclosure is not the ratchet wall, the same amount of lead must be used there as in the lateral walls.

  For bending magnet white-beam enclosures, only the area 1 m^2 around the direct beam direction is determined by bremsstrahlung. For synchrotron radiation, PHOTON analysis was used to recommend lead of 9 mm for the downstream

wall, 8 mm for the lateral wall (and upstream wall if required), and 6 mm for the roof.

- Monochromatic Beam

  The ID monochromatic enclosures are recommended to have 12 mm of lead for the downstream wall, 10 mm for the upstream and lateral walls, and 6 mm for the roof. Similarly, the bending-magnet monochromatic enclosures are recommended to include 7 mm of lead for the downstream wall, 6 mm for the upstream and lateral walls, and 4 mm for the roof.

- Pink Beam

  The comments above on pink-beam direct stops/shutters apply to the pink-beam enclosures. Monochromatic-beam station shielding is adequate for pink-beam enclosures.

4.2.6.4 Loss of Vacuum Incident in the Storage Ring

The primary gas bremsstrahlung produced in the ID beamlines is a function of the gas pressure in the storage ring. Bremsstrahlung scattering calculations reported in ANL/APS/TB-20 (Job et al. 1994) corresponds to an ID chamber vacuum of 10^{-9} Torr. A loss of vacuum in the storage ring can considerably increase the bremsstrahlung dose rates in the beamlines. The total dose received by a person outside of an FOE, near a bremsstrahlung stop, has been calculated in the event of a complete loss of vacuum in the storage ring. For the calculations reported here, the storage ring is assumed to be at a pressure of 760 Torr and the entire stored beam energy of 9280 Joules, the accelerator safety envelope, passes through one of the ID chambers.

The total beam-integrated bremsstrahlung power has been estimated as 0.13 mwatts for the storage ring vacuum of 10^{-9} Torr and for a beam current of 300 mA at the electron energy of 7 GeV. The beamline bremsstrahlung stops are designed in such a way that the dose rates at any given time during operation is less than 2.5 μSv/h (0.25 mrem/h) outside the enclosure. Thus in 1 hr a dose of less than 0.25 mrem will be measured for a maximum total energy of 1.3×10^{-4} W (3600 s) = 468 mJ. The dose rate can be scaled appropriately for the dose rate corresponding to an energy deposition of 9280 Joules in one turn. It is conservatively assumed in this calculation that all the kinetic energy of the beam is converted into bremsstrahlung. The calculated instantaneous dose outside the enclosure in the event of a loss of vacuum in the storage ring will not exceed 5 rem.

This is assumed to be the worst-case scenario because:

- The calculations are for the maximum beam energy and current at the accelerator

safety envelope.

- All the kinetic energy of the beam is converted into bremsstrahlung.
- All the bremsstrahlung is produced from one insertion device.
- The loss of vacuum takes place instantaneously.

4.2.6.5 Experiment Beamline Ionizing Radiation Hazard Summary

A significant amount of guidance on shielding requirements has been provided by the APS for shielding design. This guidance is based on the shielding criterion adopted at the APS, which requires that the dose rates be ≤ 2.5 μSv/h (0.25 mrem/h) at 30 cm from the secondary radiation sources at the accelerator safety envelope operation. However, for shielding the scattered synchrotron radiation, the recommended shielding thicknesses include an additional tenth value layer of the shielding material. This makes the shielding recommendations extremely conservative.

The shielding requirements provide the basis for the criteria that must be met in the design of the beamlines. The beamline designs are subject to the Beamline Safety Design Review Steering Committee reviews at the preliminary and final design levels. The APS designs the Personnel Safety System interlocks, which ensure that personnel will not enter the interlocked areas. The APS will maintain a continuous surveillance of the beamline operating conditions. Personnel will be trained to understand the specific radiation hazards and specific procedures for each beamline operation. Therefore the probability of occurrence of a serious radiation hazard has been determined to be low. The consequences of exposure to ionizing radiation are classified as medium. Therefore the risk factor from ionizing radiation is deemed to be low.

4.2.7 Radioactive Materials, General

Previous SAD revisions have addressed the ionizing radiation hazard presented by the accelerated beam and x-rays as well as from activation of accelerator system components inside the accelerator shielded enclosures. This section was added in SAD revision 4 to discuss the hazards posed by radioactive materials in general (i.e., beyond those discussed in the earlier sections).

Occasionally activated components need to be removed and stored outside of the shielded enclosures pending disposition. Activated components are stored inside posted Radioactive Materials Areas (RMAs). Several RMAs are located inside the APS facility - 400 area shown in Figure 1.1. There also is an RMA located inside Building 382 where approximately two dozen activated components are being held

in long-term storage, and an RMA has been established in Building 314 to store undulators that may be removed from the storage ring tunnel enclosure.

In addition, various check/calibration sources and material samples are stored or used inside the APS facility – 400 area. None of these are used or stored within the Table 1.1 identified APS areas outside of the APS facility - 400 area.

Occasionally a user may wish to examine a radioactive sample in an x-ray beamline. The only portions of the APS facility which would contain such samples is the APS facility – 400 area. APS maintains a formal procedure that applies to the proposed use of radioactive samples. A standing safety committee is used to evaluate proposed uses of radioactive samples. The full committee meets to discuss samples that are unusual in nature or where interpretation of the APS policy needs to be applied. Otherwise at least two members review all proposed samples. They call for a full committee meeting when a sample looks like it may approach allowed limits or the proposed containment is different from any previously evaluated.

An Argonne procedure requires that an inventory be maintained of the radiological material (excluding activated components) being stored or handled within the APS facility. This Argonne procedure also requires that the isotope quantities making up the inventory be compared to the Hazard Category 3 threshold quantities derived according to DOE-STD-1027-92, Change Notice 1 (and its referenced documents). A "sum of the fractions" must be made to determine whether or not the overall ratio to the Hazard Category 3 threshold quantities exceeds an assigned administrative limit ratio (with a ratio of 1.0 representing reaching the Category 3 threshold) for each designated Argonne site building or facility. The APS facility – 400 area is included in the inventory and has assigned administrative limits pertinent to the radioactive material inventoried. The Argonne administrative limit ratio for the APS facility – 400 area is 0.1. The highest recorded actual total ratio sum of radioactive materials for the APS facility – 400 area applied to the Category 3 administrative limit was 6.65E-03. Radioactive samples are typically far below this.

In addition the Pu-239 Fissile Grams Equivalent (FGE) must be calculated and kept within a separate administrative limit. The Argonne Pu-239 FGE administrative limit for the APS facility – 400 area is 10 Pu-239 FGE. The highest recorded total of actual Pu-239 FGE values for the APS facility – 400 area was 0.0866 Pu-239 FGE.

It can be seen that the ratio of actual quantities are of little significance when compared to the administrative limits.

Radioactive materials are a source of ionizing radiation that creates a personnel hazard from either external exposure (shine) or potential ingestion of radioactive material. External exposure is controlled through performing radiological surveys, monitoring individual exposure with dosimeters, limiting access to areas where appreciable radiation levels may exist, and posting such areas to inform personnel of

the ionizing radiation hazard. These controls are all defined in the Argonne Radiation Protection Program and are reflected in various Argonne procedures followed at APS. These controls have already been addressed in this SAD, but have not been explicitly linked to handling or storing activated components or radioactive sources or samples.

Ingestion could occur as a result of handling items with loose surface contamination or inhaling airborne contamination. This contamination could result from either a leaking sealed source or experiment sample.

Use and storage of check and calibration sources are controlled through a site-wide sealed source inventory and control program whose provisions meet the requirements of 10 CFR 835 Subpart M--Sealed Radioactive Source Control. To meet one of these provisions, periodic surface wipes are taken to detect any loose contamination that may result from a leaking source. Detection of a potentially leaking source results in a detailed investigation and isolation of the suspect source pending final disposition.

Radioactive experimental samples at APS are required to be encapsulated or in a form that will not result in either loose surface or airborne contamination. The previously mentioned APS procedure requires advance notification requesting use of a radioactive sample and review of that proposed use. The review includes evaluation of potential release mechanisms (such as a fire or mechanical impact) and how the encapsulation is designed to withstand the associated conditions.

As an accelerator facility, APS is not required to be categorized using DOE-STD-1027-92 (DOE 1997) per 10 CFR 830.203(3). For purposes of this hazard analysis, the definition of Hazard Category 3 and the relevant threshold quantity values provided in DOE-STD-1027-92 are used to determine if there is sufficient radioactive material present to potentially create significant localized consequences (taken to be radiation exposure of workers above the limits given in 10 CFR 835). If the overall ratio is equal to or exceeds 1.0, then sufficient radioactive material is present to potentially result in localized consequences and a detailed release analysis should be performed for further evaluation. If the overall ratio is below 1.0, no localized consequences will result and no further evaluation is needed.

As is obvious from both of the applied Argonne administrative limits, the overall ratios fall below 1.0 (and considerably below for the actual quantities present) so no localized consequences will result and no further evaluation is performed.

4.3 Non-ionizing Radiation Hazards

A significant amount of equipment protection interlocks have been designed into the APS accelerator systems to prevent a non-ionizing radiation hazard from existing for an extensive length of time.

An appropriate number of personnel protection interlocks have been designed into the APS/rf equipment to prevent a non-ionizing radiation hazard from existing. Therefore, the probability of occurrence of a non-ionizing radiation hazard has been determined to be extremely low. The non-ionizing radiation hazard consequence has been determined to be low. Therefore, the risk is extremely low.

Low power lasers for survey do not present a safety hazard.

4.3.1 rf Radiation Hazards

4.3.1.1 Linac rf Radiation Hazards (including rf gun)

The linac rf operating frequency is 2856 MHz. At this frequency the threshold limit value (TLV) national standard is 9.52 mW/cm^2 power density for eight hours of continuous exposure (ACGIH 1997).

A properly bolted waveguide system typically radiates far less than 0.1 mW/cm^2 even at 250 kW of continuous wave power. An improperly bolted flange could result in an opening or gap which could cause radiation to exceed the national standard. Copper crush gaskets are used, ensuring good rf seals as well as good pressure/vacuum seals. The linac transmission waveguides are either under pressure or under vacuum, both of which require good mechanical connections. System interlocks would not normally allow the system to run without properly connected waveguides, and this would limit the duration of the rf radiation leakage.

Achievement of a source level beyond the threshold limit would require an open waveguide radiating into free space, which could only happen with the waveguide disconnected and the rf amplifier generating full power. The waveguide would arc over before the power front could reach the opening, which would create a short circuit and reflect back most of the power. This reflected power would exceed the safety trip levels of the waveguide protection system. Therefore, this situation is highly improbable, since it would normally be prevented by multiple klystron and modulator protection interlocks which would immediately shut down the modulator and the rf drive to the klystron.

Protection against rf radiation is provided by the following:

- Properly trained personnel are required to tour the klystron gallery and linac tunnel to check that all waveguides are properly connected before the first startup after any waveguide work.
- A waveguide protection system is in operation to ensure that all waveguides have the correct vacuum (or pressure). Interlocks prevent operation when these conditions are not fulfilled.

- The region around any rf equipment found to be above background is posted to warn against continuous occupation when red warning lights are on.

4.3.1.2 Particle Accumulator Ring rf Radiation Hazards

There are two rf systems in the PAR: one operates at 9.8 MHz and the other at 117 MHz. At these frequencies, the radio frequency/microwave TLVs (ACGIH 1997) for eight hours per day of continuous exposure are 10 mW/cm^2 and 1 mW/cm^2, respectively.

Four 1-kW solid-state power amplifiers (4 kW total) provide rf power to the 9.8-MHz cavity, and four 500-W solid state power amplifiers are connected to the 117-MHz cavity. Both systems are also configured to be driven by a hard tube amplifier. The fundamental hard tube amplifier can drive the 9.8 MHz system and is set for a maximum of 5 kW peak power. The 177 MHz system is driven by a 3 kW hard tube amplifier. The amplifiers are mounted inside two racks with metal doors. The cavities have no openings of significant size that radiate any significant amount of power into the surrounding area. The tuners are bolted in place and have signs on each cavity warning against removal.

4.3.1.3 Injector Synchrotron rf Radiation Hazards

The operating frequency of the rf cavities for the synchrotron is 352 MHz. At this frequency, the TLV (ACGIH 1997) for eight hours per day of continuous exposure is 1.17 mW/cm^2.

An improperly bolted flange could result in an opening or gap that could cause radiation to exceed the national standard. Achievement of a source level beyond the threshold limit would require an unbolted waveguide. Protection against rf radiation is provided by the following:

- Properly trained personnel are required to conduct a walk-through to insure that all waveguide sections are properly connected. This procedure must be completed before the first startup of the rf system after any interventions in any sections of the waveguide system.

- A waveguide protection system, using air pressure switches, is in operation to ensure that all waveguides have the correct pressure. Interlock switches shut down the klystron power supplies and prevent operation when these conditions are not fulfilled. The synchrotron waveguide is under slightly increased air pressure due to cooling fans on the ceramic windows. This pressure would be released if a waveguide flange were unbolted.

- Radio frequency radiation monitors, placed in several locations around the building, sound local warnings and trip the rf systems if the rf radiation level

exceeds 0.1 mW/cm2. They are also monitored for alarm and trip levels by the control system.

4.3.1.4 Storage Ring rf Hazards

The storage ring rf cavities operate at 352 MHz. At this frequency, the TLV (ACGIH 1997) for eight hours per day of continuous exposure is 1.17 mW/cm^2.

An improperly bolted flange could result in an opening or gap that could cause radiation to exceed the national standard. Achievement of a source level beyond the threshold limit would require an unbolted waveguide flange or a significant opening in the wall of the waveguide. Protection against rf radiation in the storage ring waveguide system is provided by the following measures:

- Properly trained personnel are required to conduct a walk-through to insure that all waveguide sections are properly connected. This procedure must be completed before the first startup of the rf system after any interventions in any sections of the waveguide system.

- All maintenance work that requires opening waveguide flanges or removing sections of waveguide must be approved in writing before the work begins. All 352-MHz rf systems must be off and under LOTO control before the waveguide work is started and remain so until the waveguide system is re-assembled. Before rf power is re-established anywhere in the system, a second person verifies that all affected waveguide flanges are properly bolted and all bolts are torqued to specification. After rf power is turned on, all waveguide flanges affected during the work activity are checked for rf leakage by the use of a hand-held rf radiation monitor.

- A waveguide protection system, using air pressure switches, is in operation to ensure that all waveguides are sealed and maintain a calibrated positive pressure. Interlock switches shut down the klystron power supplies and prevent operation when these conditions are not satisfied. The storage ring waveguide system is under slightly increased air pressure due to cooling fans on the ceramic windows. This pressure would be released if a waveguide flange were unbolted.

4.3.2 Laser Hazards

4.3.2.1 Low-Power Laser Hazards

Low-power (Classes 1, 2, and 3a) lasers are used for alignment of accelerator, insertion device, front end, and beamline components. These low-power devices do not present safety hazards and will be used in compliance with the existing Argonne health and safety guidelines and procedures. Other uses for lasers may be included in the various beamline designs. These will be addressed as part of the beamline review

process to ensure compliance with the existing Argonne ES&H Manual (ANL onlineB).

The users of all lasers will be required to complete appropriate operator training, and operating procedures will be required to be in place. Therefore, the probability of occurrence of a nonionizing radiation hazard has been determined to be extremely low. The nonionizing radiation hazard consequence has been determined to be low. Therefore the risk is extremely low.

4.3.2.2 High-Power Laser Hazards

All work with lasers at APS shall comply with all Argonne requirements as defined in Chapter 6–2 of the Argonne ES&H Manual (ANL onlineB) and be designed and administered in accordance with the requirements of the American Standard for the Safe Use of Lasers, ANSI Z136.1. The design and operation of all Class 3a, Class 3b, and Class 4 lasers will be reviewed and approved by the Division Director/Department Head (DD/DH), considering the advice provided by the review of the Laboratory Laser Safety Officer (LSO).

4.3.2.2.1 Laser-Controlled Areas

All laser-controlled areas (LCAs) will comply with all Argonne requirements as defined in Chapter 6-2 of the Argonne ES&H Manual and be designed and administrated in accordance with the requirements of the American Standard for the Safe Use of Lasers, ANSI Z136.1. In general, an LCA includes the following features:

- No visual access into the LCA at the wavelength of the laser light.
- Prevention of unexpected or unauthorized entry into the LCA by engineering controls or, alternatively, the accessible laser beam is automatically cut off upon such entry. See section 3.11.1.5.2 for additional details related to the LCA interlock system.

Normally, only work directly connected with the laser may be performed in the LCA when the laser is operating. In extraordinary circumstances, such work may be performed with permission of the LSO, provided that the persons performing such work have received laser safety training and have had the required medical examination.

4.3.2.2.2 Interlocks and Automated Warning Devices

Interlocks and automated warning devices will be tested as a unit, as well as in their component parts; testing of interlocks for LCAs located inside of the accelerator enclosures will be performed at least annually. All other interlocks and automated warning devices will be tested at least quarterly. All test results will be documented.

If a malfunction is found, it must be corrected immediately, or equivalent temporary controls must be substituted.

Invisible beam Class 3 and Class 4 laser systems will incorporate an automatic warning light, or other suitable device, to indicate the presence of a beam. The warning device must be visible through laser safety eyewear and must be located so that a person working near the beampath will see it.

4.3.2.2.3 Standard Operating Procedures

A standard operating procedures (SOP) document shall be prepared for each Class 3b or Class 4 laser installation; one SOP may be prepared for the entire LCA, provided that operating procedures for each Class 3b and Class 4 laser in the LCA are addressed. All SOPs shall include the following information: a list of persons authorized to operate the laser(s); a listing of specific laser–related hazards within the LCA and a description of the hazard control methods used; a description of safety devices and safety procedures specific to each laser system within the LCA and to the LCA itself; and a detailed description of any unusual or unique safety procedures and/or administrative controls. The SOP must be approved by the DD/DH after considering the advice provided from the laser safety officer's review.

4.3.2.2.4 Personal Protective Equipment

Class 3b and Class 4 lasers are capable of causing eye injury to anyone who looks directly into the beam or specular reflections. Diffuse reflections of a high-power laser beam can also produce permanent eye damage. Laser safety eyewear will be worn at all times by all persons in an LCA, when engineering or administrative controls are inadequate to eliminate potential exposures in excess of the applicable maximum permissible exposure. Laser safety eyewear will be inspected annually for pitting, crazing, cracking, discoloration, mechanical integrity, and light leaks. Eyewear in suspicious condition will be discarded. Inspection of eyewear will be documented. All laser safety eyewear shall meet ANSI Z136.1 standards and are required to have the wavelength and corresponding optical density rating inscribed on the frames or lenses of the eyewear.

4.3.2.2.5 Posting

Posting of areas where lasers are in use shall be according to the requirements of ANSI Z136.1.

4.3.2.2.6 Training and Medical Requirements

All users of Class 3 and Class 4 lasers must have laser safety training prior to any laser use, and refresher training must be obtained at least biannually. Users of Class 3b and Class 4 lasers are required to have an eye medical examination prior to and

following termination of their work with these lasers. The user will make arrangements with the Medical Department.

4.3.2.2.7 Fire Hazards

Class 4 lasers are capable of imparting enough energy to highly combustible materials to create an ignition hazard. To minimize this risk, no combustibles will be stored on the laser tables during operation. The laser room and the rf gun room will be supplied with a Type III fire extinguisher. Both the rf and laser rooms will be monitored with a VESDA detection system and a wet pipe sprinkler-type fire suppression system.

4.3.2.2.8 Skin Burn Hazards

Class 4 lasers are capable of causing skin burns. Class 3b lasers may cause some skin irritation. For this reason Class 4 laser operations will be performed in an enclosed beam whenever practical. During periods of laser alignment or maintenance, laser operators will minimize direct skin exposure by keeping beam enclosures intact whenever possible and by covering exposed skin.

4.3.3 Visible/Ultraviolet Radiation Hazards

The generation of visible, ultraviolet (UV), and soft x-ray radiation will occur via the synchrotron radiation mechanism in all dipole magnets of the APS. Vacuum chambers in specific dipoles are modified to allow extraction of the synchrotron radiation for purposes of particle beam imaging. There are two such chambers in the PAR and three in the synchrotron. In the storage ring, one dipole in Sector 35 will be used for UV- visible imaging. These optical transport lines all involve a pickoff mirror that only reflects the visible and ultraviolet photons, quartz viewports that strongly attenuate the wavelengths below 200 nm, and for the PAR and synchrotron a series of crown glass lenses that poorly transmit (~10% per 10 mm thickness) the UV-B (320 nm > λ > 280 nm) and UV-C (280 nm > λ > 160 nm) radiation. The UV-A (400 nm > λ > 320 nm) is transmitted but is not normally considered a hazard. In the storage ring case, metal mirrors will be used for part of the transport.

The radiation source strength depends on the particle energy (to the fourth power), the stored beam current, and the bending magnet strength. The critical wavelength, λ_c (the point at which half the total power is radiated above and half below), depends inversely on field strength and the energy squared.

4.3.3.1 LEA Visible/UV Hazards

The probability of occurrence of a nonionizing radiation hazard has been determined to be extremely low, and the nonionizing radiation hazard consequences have been determined to be low. Therefore, the risk is extremely low.

4.3.3.2 PAR Visible/UV Hazards

For the PAR the critical wavelength is 6.2 nm and the source strength is about 4 mW/mm^2 at a distance of 1 m. This is attenuated strongly in the UV-B and UV-C range by the glass lenses that involve at least 60 mm of glass thickness, or $(0.1)^6$ reduction. This factor, coupled with the vertical defocusing of the photon beam by a factor of 10 to cover a square cm, the order of magnitude drop-off in intensity with wavelengths longer than λ_c, and the fraction of wavelengths in the UV-B and UV-C interval, lead to an exposure level much below the 8 h/day threshold limit value (TLV) of 0.1 $\mu W/cm^2$ (ANL onlineB).

Hazards associated with visible light might exist in the PAR diagnostics enclosures. The TLV for occupational exposure to broadband and near-infrared radiation for the eye applies to exposure in any 8-hour workday. Calculations indicate that the total power in the visible region is less than 0.6 mW at the source. Most of this will be transported to the optics tables. ESH-AC will evaluate actual light intensity levels at the enclosed optics tables. If a need for corrective action is indicated, detailed operations procedures, protective equipment, or filters will be used to minimize the risk.

Protection against the UV radiation at the PAR is provided by the following:

- Local exposure around the exit window is prevented by the prohibition of personnel in the PAR vault during operations.
- At the other end of the enclosed photon transport line the glass lenses have dramatically attenuated the flux below the TLV.
- An additional UV-blocking (A, B, and C components) filter will be added at the exit port of the photon transport line if ESH-AC monitoring indicates a need.

If the photon transport line has no lenses, the light will not be focused or usable, and the port will be capped with an appropriately opaque material.

4.3.3.3 Synchrotron Visible/UV Hazards

The same basic principles apply to the injector synchrotron. At the initial injection energy of 450 MeV, the synchrotron radiation total power drops because the same charge is now circulating in a ring having a circumference twelve times larger than the PAR and the bending radius of the beam is ~ 40 times larger. The critical wavelength is 205 nm (UV-C). However, after ramping the energy of the beam to 7 GeV, the radiated power increases by the energy to the fourth power and shifts to shorter wavelengths ($\lambda_c \sim 0.055$ nm). The pickoff mirrors will only reflect the UV and visible components. Eye damage could result from extended direct viewing of the highly collimated synchrotron light beam.

Hazards associated with visible light might exist in the synchrotron diagnostics enclosures. The TLV for occupational exposure to broadband and near-infrared radiation for the eye applies to exposure in any 8-hour workday. Calculations indicate that the total power in the visible region is less than 0.2 mW at the source. Most of this will be transported to the optics tables in the lockable optics lab. LCAS (Laser Control Area Supervisor) will evaluate actual light intensity levels at the optics tables. If a need for corrective action is indicated, detailed operations procedures, protective equipment, or filters will be used to minimize the risk.

Protection against the UV radiation at the injector synchrotron is provided by the following:

- Local exposure around the exit window in the tunnel is prevented by the prohibition of personnel in the synchrotron tunnel during operations.
- At the other end of the enclosed photon transport line, the glass lenses will dramatically attenuate the flux.
- The optics tables above the synchrotron tunnel will be enclosed in a 4.9 m (16 ft) × 7.3 m (24 ft) light-tight, lockable room with access only by the authorized diagnostics personnel.
- UV-blocking glasses or goggles will be required when UV hazards are present. The UV hazards will be posted by signage.

If the photon transport line has no lenses, the light will not be focused or usable, and the port will be capped with an appropriately opaque material.

4.3.3.4 Storage Ring Visible/UV Hazards

Since the UV radiation will be used for imaging in the storage ring, it cannot be completely blocked. At the initial injection energy of 7 GeV, the synchrotron radiation total power drops because the same charge is now circulating in a ring having a circumference three times larger than the injector synchrotron, and the bending radius of the beam is similar. The critical wavelength is similar to the injector synchrotron at ramped energy ($\lambda_c \sim 0.063$ nm). The pickoff mirror will only reflect the UV and visible components. Monitoring will be done by LCAS to establish the actual levels.

Hazards associated with visible light will exist in the SR diagnostics enclosures. The TLV for occupational exposure to broadband and near-infrared radiation for the eye applies to exposure in any 8-hour workday and require knowledge of the spectral radiance and total irradiance of the source as measured at the position of the eyes of the worker. Calculations indicate that the total power in the visible region is less than 7 mW at the source. Most of this will be transported to the lockable optics enclosure.

ESH-AC will evaluate actual light intensity levels at the optics tables. If a need for corrective action is indicated, detailed operations procedures, protective equipment, and/or filters will be used to minimize the risk.

Protection against the UV radiation at the storage ring is provided by the following:

- Local exposure around the exit window in the tunnel is prevented by the prohibition of personnel in the storage ring tunnel during operations.
- At the other end of the enclosed photon transport line, the multiple mirror reflections will reduce the flux.
- The optics tables will be enclosed in a 5 m (16.4 ft) × 3.3 m (10.8 ft) light-tight, lockable room with access only by the authorized diagnostics personnel.
- UV-blocking glasses or goggles will be required when UV hazards are present. The UV hazards will be posted by signage.

If the photon transport line has no optics, the light will not be focused or usable, and the port will be capped with an appropriately opaque material. The initial installation will involve a camera located in the tunnel which will have remote control features.

4.4 Electrical Hazards

Equipment protection interlocks have been designed into the accelerator systems to eliminate the presence of an electrical hazard to personnel. Operator training and operating procedures are in place to ensure that any maintenance is performed in a safe manner. Therefore, the probability of occurrence of an event due to electrical hazards has been determined to be low. The consequence from an electrical hazard would be medium, since the consequence of such an incident could result in death. The risk of this combination is low.

4.4.1 Linac

The Linac RF Gun system consists of two top level assemblies rfgun-1 and rfgun-2. Each is an operational duplicate of the other with small differences, the differences will be described in the sections below.

4.4.1.1 Electrical Hazards for the LEA rf Gun Heater Power Supplies

The rf gun heater power supplies are used to energize the rf gun (RFG) cathode heaters. Each RFG heater is independently powered by an air-cooled, 60-W power supply at 15 VDC and a current of less than 4 A. The RFG coil is interlocked with the vacuum to the power supply.

4.4.1.2 Electrical Hazards for the rf Gun Alpha Magnet Systems

The alpha magnets are used to steer the rf gun beams into the linac. The trim coils are used to degauss the magnet when switching from rf gun operation to DC gun operation.

The magnet's main coils and trim coils are independently powered. The main coils are powered by an air-cooled, 10-kW power supply RFG-1 uses a 80 VDC and a current of less than 125 A, RFG-2 uses a 30 VDC and a current of less than 330 A. The trim coils are powered by an air-cooled, 100-W bipolar power supply at ± 20 VDC and a current of less than ± 5 A. The main magnet coils are water cooled and the trim coils are air cooled. The main coils are protected with high-temperature sensors interlocked to the power supply.

4.4.1.3 Electrical Hazards for the rf Gun Kicker Magnet Systems

The kicker magnets are used to pass a small portion of the available beam to the linac. The magnets are powered by a pulse-forming network (PFN) made of high-voltage coaxial cable and capacitors. The PFN voltage is up to 30 kVDC. The stored energy is 1 J. The PFN is powered by a separate high-voltage power supply. The rating of the supply is 500 W at 30 kVDC. The stored energy at the output is less than 1.5 J.

4.4.1.4 Electrical Hazards for the rf Gun Quadrupole Magnet Systems

Four quadrupole magnets for each RFG are used to keep the RFG beamlines focused, allowing the beam to pass through the vacuum chamber aperture with minimal loss. Each magnet is independently powered by an air-cooled, 8-W power supply at 4 VDC and a current of less than 2 A. The magnet coils are air-cooled and protected with high-temperature sensors interlocked to the power supplies.

4.4.1.5 Electrical Hazards for the rf Gun Corrector Magnet Systems

Three corrector magnets for each RFG are used to make minor steering adjustments to the beam position in the vertical and horizontal axes as it passes through the rf gun beamline. The horizontal and vertical coils are independently powered by 6 air-cooled supply module rated at ± 20 VDC ± 5 A max. The magnet coils are air cooled and protected with high-temperature sensors interlocked to the power supplies.

4.4.1.6 Pulsed Klystron and Modulator

All modulator and klystron enclosures with exposed high voltage have electrical and mechanical interlocks. Contact with any live high voltage components could cause severe injury. The electrical interlock status is continuously monitored by the modulator control system. Unauthorized entry into any controlled cabinet trips the mechanical interlock and causes all high voltage hazards to be neutralized. High

voltage contactors are opened, and shorting bars are placed across any electrical energy storage devices. All interlocks are latching, and a specific sequential procedure must be completed in order to re-enable operation. A manual reset switch must be pressed to clear the interlock chain after a trip. A groundstick for safety grounding is located inside each cabinet. The groundstick allows personnel to ensure complete safety of the system prior to any intervention and must be replaced in the correct position before the interlock chain can be satisfied to restart a modulator.

The control system monitors modulator operation. In the event of an interlock trip, the control system places the modulator into a safe, grounded condition which protects both personnel and property. If an unsafe status exists within the modulator, the control system instructs the system to shut down. The control system is a combination of relays, transistor-transistor logic (TTL), and other technologies, which has been designed in accordance with "Fail Safe" design standards. The modulator is completely shut down within 100 ms of a fault detection.

The power supply is capable of producing 2 A at 25 kV for a total of 50 kW. The power supply has 14 μF of capacitance at 25 kV, thereby storing 4.375 kJ of energy. The pulse forming network has 0.07 μF of capacitance that is charged through a 22 H charging choke to produce a 38 kV network at 4 Ohms. This system can deliver 9.5 kA of current into a short circuit. Under normal operation into a matched load, the system generates 4.75 kA into the pulse transformer. This rating qualifies the modulator as both high voltage and high current. The system's output is delivered to a pulse transformer and klystron via two RG-220 cables which have been made into a triaxial configuration by the installation of an additional shield. The outer cable shield and the modulator cabinets are both at ground potential. The main modulator cabinets are excluded as pulsed power current returns by design. The cabinets and cable shielding are not elevated above ground potential, and are thereby safe for contact by personnel.

All high voltage and high power equipment is contained within bolted cabinets to protect personnel from getting struck by exploding parts or hot metal in case of an arc over or fault. The cabinet walls are sufficiently sturdy to ensure this, since the cabinets have been designed as NEMA Type 1 enclosures.

All cabinets, cable trays, and other systems are tied to ground through a 4/0 copper wire which runs throughout the building and is tied to the main ground network. Individual cable tray segments are grounded together for safety, via a copper cable which runs the length of the trays and has bolted attachments to each segment.

Opening the charging choke cabinet door will trip the modulator's main contactor. A grounding stick, which is interlocked to the safety circuit, is also provided in this cabinet.

The 480-V power to the modulator's high voltage is controlled by the master safety system. A "normally open" contactor is kept "on" by the safety system. In the event of an interlock trip, the contactor will open which switches "off" the 480-V 3-phase power to the modulator's high voltage. The modulator's control power is not disconnected by the safety system. This is not necessary for safety reasons and increases the lifetime of sensitive components such as tetrodes, thyratrons, and control system electronics.

4.4.1.7 Linac Electric Power and Maintenance

"Working hot" operations will be performed only when absolutely necessary. In such cases, working hot permits are required in order to troubleshoot, test, or perform any type of work on energized electrical equipment. All APS and Argonne policies in regard to working hot procedures are followed, including:

- maintenance of working hot log books,
- complete training for personnel assigned to working hot,
  - CPR instruction,
  - required Argonne courses for a facility of this type,
- proper equipment, never working alone, and other relevant requirements.

The main circuit breakers and safety disconnect switches for linac equipment are clearly labeled. These breakers de-energize all electric power when placed in the off position. APS and Argonne complex lockout/tagout policies are strictly adhered to. Emergency stop buttons, located in the linac tunnel, disconnect power to selected equipment in the linac when activated.

APS maintenance precautions for working on magnets must be followed. All magnet terminals are insulated and protected against accidental contact. Prior to any operation which requires access to magnet or power supply electrical connections, the magnet and power supply are totally de-energized. The disconnect switches are locked out and all accessed connections are checked with a meter to verify that they are off.

4.4.2 Low Energy Transport (LET) Line

All magnets can be operated with personnel in the linac/PAR and synchrotron enclosures. Work on or around the magnets requires three or more magnets to be totally de- energized and locked out, i.e., as a minimum, the magnet being worked on and its adjacent upstream and downstream magnets. This number may be increased depending on the covers/guards that need to be removed. "Working hot" operations

will be performed only when absolutely necessary. In such cases, working hot permits are required in order to troubleshoot, test, or perform any type of work on energized electrical equipment. All APS and Argonne policies in regard to working hot procedures are followed, including:

- maintenance of working hot log books,
- complete training for personnel assigned to working hot,
  - CPR instruction,
  - required Argonne courses for a facility of this type,
- proper equipment, never working alone, and other relevant requirements.

A significant number of equipment interlocks have been designed into the LET for personnel electrical hazard protection. Operator training and operating procedures are in place to ensure that maintenance is performed in a safe manner. Therefore, the probability of occurrence of an event due to electrical hazards has been determined to be low. The consequence from an electrical hazard has been determined to be medium, since the potential for electric shock with possible death exists. Therefore, the risk is low.

4.4.2.1 Electrical Hazards for LET Dipole Magnets and Power Supplies

The LET beamline has three dipole magnets. One is used to guide the linac beam for transport into the PAR and two are used to guide the PAR extracted beam for transport to the synchrotron. Each magnet is independently powered by a power supply at max voltage of 600 VDC and a current of less than 350 A. The power supplies are located in Building 412 and 411-PAR mezzanine. The magnets are water cooled with high-temperature sensors on the magnet coil interlocked to the power supply. The magnet has a stored energy of 3.5 kJ.

4.4.2.2 Electrical Hazards for the LEA Vertical Bend Triplet Magnet System

Six dipole magnets are used to guide the beam, first vertically up and then back level again, to raise the beam elevation one meter for its transport to the LEA tunnel. Each triplet is powered by an air-cooled, 2-kW power supply at 100 VDC and a current of less than 20 A. The magnet coils are water cooled and protected with high-temperature sensors interlocked to the power supplies.

4.4.2.3 Electrical Hazards for LET Quadrupole Magnets and Power Supplies

Twenty-one quadrupole magnets are used to keep the LET beamlines focused, allowing the beam to pass through the vacuum chamber aperture with minimal loss. They produce a 12-T/m gradient. Each magnet is independently powered by an air-cooled, 1- kW power supply at 30 VDC and a current of less than 33 A. The magnets are water cooled with high-temperature sensors on the magnet coil, interlocked to the power supply.

4.4.2.4 Electrical Hazards for the LEA-related Quadrupole Magnet Systems

Low-energy beam travels out of the linac, bypasses the PAR, and continues through the synchrotron enclosure. Thirteen quadrupole magnets in the bypasses only are used to keep the LEA beamline focused, allowing the beam to pass through the vacuum chamber aperture with minimal loss. Each magnet is independently powered by an air-cooled, 600-W power supply at 10 VDC and a current of less than 60 A. The magnet coils are water cooled and protected with high-temperature sensors interlocked to the power supplies.

4.4.2.5 Electrical Hazards for LET Corrector Magnets and Power Supplies

Sixteen corrector magnets are used to make minor steering adjustments to the beam position in the vertical and horizontal axes as it passes through the LET. Each magnet is independently powered by an air-cooled, 100-W bipolar power supply at ± 20 VDC and a current of less than ± 5 A. The power supplies are located in room B105, Building 412. The magnets are water cooled with high-temperature sensors on the magnet coil, interlocked to the power supply.

4.4.2.6 Electrical Hazards for the LEA-related Corrector Magnet Systems

Low-energy beam travels out of the linac, bypasses the PAR, and continues through the synchrotron enclosure. Nine corrector magnets are used to make minor steering adjustments to the beam position in the vertical and horizontal axes as it passes through the RFG beamline. Each magnet is independently powered by an air-cooled 400-W bipolar power supply at ± 12 VDC and a current of less than ± 36 A. The magnet coils are water cooled and protected with high-temperature sensors interlocked to the power supplies.

4.4.2.7 Electrical Hazards for the LEA Beam Dump Magnet System

The beam dump magnet is used to guide the LEA beam into a beam dump located at the floor of the synchrotron enclosure. The magnet is independently powered by an

air-cooled, 15-kW power supply at 150 VDC and a current of less than 100 A. The magnet coils are water cooled and protected with high-temperature sensors interlocked to the power supply. The power supply has a ground-fault detection circuit that trips if the current exceeds 1/4 A. The magnet has a stored energy of 7 kJ.

4.4.2.8 Electrical Hazards for LET Injection/Extraction Septum Magnet and Power Supply (PAR)

A single 0.4-m AC septum magnet with a maximum field of 0.75 T and operating at a frequency of 60 Hz is used to steer the LET beam to a location where it can be bumped into the PAR beam orbit by its injection bumper magnets. At the completion of the PAR beam accumulation and damping cycle, the PAR extraction bumper magnets bump the beam back into the same AC septum magnet, thus steering it back on the LET beam axis. The septum magnet is energized by a water-cooled, resonant pulsed power supply located on top of the PAR enclosure. The power supply is rated at 10 kW and designed to deliver a maximum 4.7-kA peak pulse into an impedance matching transformer's primary. The transformer is mounted on the magnet support and its secondary is connected to the magnet's input terminals, delivering a peak current of 14.2 kA to the magnet. The maximum power supply output voltage is 2 kV. The power supply is located in a single cabinet with the doors interlocked. If a door is opened, the interlock will disable the high voltage power supply, and shorting devices (crowbar switches) will discharge the stored energy. Visual indicators of power supply status are provided. The power circuit has a maximum stored energy of 18 kJ.

4.4.2.9 Electrical Hazards for LET Injection Septum Magnet and Power Supply (Synchrotron)

This power system functions the same as described in section 4.4.2.4 except the LET beam is steered to a location where it can be bumped into the synchrotron. The power circuit has a maximum stored energy of 18 kJ.

4.4.2.10 Electrical Hazards for LET Vacuum Pressure Gauges and Ion Pumps

Pressure gauges (<180 VDC) and ion pumps (6 kV) have high voltage applied to the unit. The high voltage cable is ground-shielded and insulated at the rated voltages. Connectors shall adequately shield the feedthrough so that personnel cannot make contact with the high voltage leads. The high voltage cable is routed in conduit or cable trays approved for high voltage cables. The ion pump controllers and all high voltage cables are labeled as "High Voltage." Procedures are in place for testing, maintenance, and repair of these high voltage devices.

4.4.2.11 LET Electrical Power and Maintenance

4.4.2.11.1 Required to Perform Maintenance on LET Magnet Power Supplies

- AC power locked out at first AC disconnect before the power supply.
- Ensure that all energy storage devices are discharged.
- Ensure AC power at power supply is off using appropriate metering.

4.4.2.11.2 Required to Perform Maintenance on LET Magnets

- The power supply is locked out at the power supply breaker. The power supplies powering the magnets on either side of the one being worked on must also be locked out.
- Use appropriate metering to verify no power is applied to the magnet being worked on.

4.4.2.12 Required to Operate LET Magnet Systems

- Magnet Power Emergency Off Buttons (MPEOBs)

  None of the PAR/LET MPEOBs can be depressed. There are ten MPEOBs in this interlock chain: six distributed around the inside of the PAR/LET enclosures, one in room B105 in Building 412, one outside the east wall of room B102 in Building 412, one on the PAR mezzanine, and one in the control room. Others will be added if needed. Once depressed, each button requires manual reset.

- All magnet and power supply covers/panels must be installed.
- Magnet steel or enclosure and the power supply cabinet must be grounded to the technical equipment ground.
- All magnet and power supply interlocks must be complete.
- Posted signs and warning lights must be in place.
  - Flashing yellow light (area light) indicates all MPEOBs are reset and the magnets can be turned on; high current and magnet field are possible.
  - Flashing red light indicates high voltage possible (per magnet); it comes on when the magnet is powered.

4.4.3 Linac Extension Area (LEA)

By its nature, the LEA facility will be used for a variety of purposes. Equipment and beamline component configuration will be dependent on how the LEA will be utilized. For this reason, the configuration of focusing and correcting magnets, vacuum equipment, diagnostic devices, etc. will vary according to the test program. The numbers of these devices are therefore not specified.

All magnets might be operated with personnel in the LEA tunnel. Work on or around the magnets requires three or more magnets to be totally de-energized and locked out, i.e., as a minimum, the magnet being worked on and its adjacent upstream and downstream magnets. This number may be increased depending on the covers/guards that need to be removed. All APS and Argonne policies in regard to working on or near energized systems will be followed as appropriate.

A significant number of equipment interlocks have been designed into the LEA for personnel electrical hazard protection. Operator training and operating procedures are in place to ensure that maintenance is performed in a safe manner. Therefore, the probability of occurrence of an event due to electrical hazards has been determined to be low. The consequence from an electrical hazard has been determined to be medium, since the potential for electric shock with possible death exists. Therefore, the risk is low.

4.4.3.1 Electrical Hazards for the LEA Tunnel

Magnets may be utilized within the LEA tunnel to allow the beam to pass through the vacuum chamber aperture with minimal loss. Magnet power supplies will be determined by the operations or test configuration within LEA. Power supplies may be air cooled or water cooled and will contain appropriate interlocked temperature sensors.

4.4.3.2 Electrical Hazards for the LEA Vacuum Pressure Gauges and Ion Pumps

Pressure gauges (1.5 kV) and ion pumps (6 kV) have high voltage applied to the unit. The high-voltage cable is ground-shielded and insulated at the rated voltages. Connectors are shielded at the feedthrough so that personnel cannot make contact with the high-voltage leads. The high-voltage cable is routed in conduit or cable trays approved for high-voltage cables. The ion-pump controllers and all high-voltage cables are labeled as "High Voltage." Procedures are in place for testing, maintenance, and repair of these high-voltage devices.

4.4.3.3 LEA Electrical Power and Maintenance

4.4.3.3.1 Required to Perform Maintenance on LEA Magnet Power Supplies

- AC power locked out at first AC disconnect before the power supply.
- Ensure that all energy storage devices are discharged.
- Ensure AC power at power supply is off using appropriate metering.

4.4.3.3.2 Required to Perform Maintenance on LEA Magnets

- The power supply is locked out at the power supply breaker. The power supplies powering the magnets on either side of the one being worked on must also be locked out.
- Use appropriate metering to verify no power is applied to the magnet being worked on.

4.4.3.4 Required to Operate LEA Magnet Systems

- Magnet Power Emergency Off Buttons (MPEOBs)

None of the LEA MPEOBs can be depressed. There are five MPEOBs in this interlock chain: four distributed around the inside of the LEA tunnel and one near the power supplies in Building 413. Others will be added if needed. Once depressed, each button requires manual reset.

- All magnet and power supply covers/panels must be installed.
- Magnet steel or enclosure and the power supply cabinet must be grounded to the technical equipment ground.
- All magnet and power supply interlocks must be complete.
- Posted signs and warning lights must be in place.
    - Flashing yellow light (area light) indicates all MPEOBs are reset and the magnets can be turned on; high current and magnet field are possible.
    - Flashing red light indicates high voltage possible (per magnet); it comes on when the magnet is powered.

4.4.4 Particle Accumulator Ring (PAR)

The PAR dipole and quadrupole magnets are operated without bus covers. These magnets are normally interlocked off by the ACIS during Authorized Access and Controlled Access to the enclosures. The Equipment Test Mode of ACIS will allow occupation of the enclosure under controlled access conditions, with ONE of the following systems energized: PAR rf, dipole, or quadrupoles. Working hot log procedures and approval are required for entrance into the enclosure/tunnels during ACIS Equipment Test Mode operation. Group Lockout/Tagout of all power supplies is required for maintenance work in the enclosures. Group Lockout/Tagout is conducted by the Operations group. They conduct an enclosure/tunnel search before releasing the Group Lockout/Tagout. If personnel are required to perform work on the magnets or rf system (or a component nearby), they will follow normal lockout/tagout procedures as covered in Argonne ESH Manual Chapter 7-1 (ANL onlineB).

A significant number of equipment interlocks have been designed into the PAR for personnel electrical hazard protection. Operator training and operating procedures are in place to ensure that maintenance is performed in a safe manner. Therefore, the probability of occurrence of an event due to electrical hazards has been determined to be low. The consequence from an electrical hazard has been determined to be medium, since the potential for electric shock with possible death exists. Therefore, the risk is low.

4.4.4.1 Electrical Hazards for PAR Dipole Magnets and Power Supplies

The PAR's eight main dipole magnets are used to establish a fixed orbit for a 450-MeV beam during accumulation and damping of the beam. All of the magnets are powered by a water-cooled, 141-kW DC power supply at 335 VDC and a current of less than 420 A. The power supply is located in room B105 of Building 412. The magnets are water- cooled with high-temperature sensors on the magnet coils interlocked to the power supply. The power supply has a ground fault detection circuit that trips it if the current exceeds 1/4 A. The total dipole magnet stored energy is 75 kJ.

4.4.4.2 Electrical Hazards for PAR Quadrupole Magnets and Power Supplies

Sixteen quadrupole magnets are used to keep the PAR beam focused, allowing a 450- MeV beam to pass through the vacuum chamber aperture with minimal loss. They produce a maximum 4-T/m gradient. The 16 magnets are divided into four groups of four magnets. Three of the families of series-connected magnets are each independently powered by air-cooled, 10-kW DC power supplies at 60 VDC and a current of less than 166 A. The fourth family is powered by an air-cooled, 400-W

bipolar power supply at ± 20 VDC and a current of less than ± 20 A.. The power supplies are located in room B105 of Building 412.

The magnets are water- cooled with high-temperature sensors on the magnet coil interlocked to the power supply. The power supply has a ground fault detection circuit that trips it if the current exceeds 1/4 A. A family of magnets has a maximum stored energy of 1 kJ.

4.4.4.3 Electrical Hazards for PAR Sextupole Magnets and Power Supplies

Ten sextupole magnets are used to keep the PAR beam focused, allowing a 450-MeV beam to pass through the vacuum chamber aperture with minimal loss. They produce a 12-T/m^2 gradient. The 10 magnets are divided into three families, with four magnets in two of the families and two magnets in the third family. Each family of magnets is connected in series and the family is independently powered by an air-cooled, 2-kW DC power supply at 100 VDC and a current of less than 20 A. The power supplies are located in room B105, Building 412. The magnets are air-cooled with high-temperature sensors on the magnet coil interlocked to the power supply.

4.4.4.4 Electrical Hazards for PAR Correction Magnets and Power Supplies

Ten correction magnets are used to make minor steering adjustments to the beam position in the vertical and horizontal planes as it passes around PAR. Each magnet is independently powered by an air-cooled, 400-W bipolar power supply at ± 20 VDC and a current of less than ± 20 A. The power supplies are located in room B105, Building 412. The magnets are air-cooled with high-temperature sensors on the magnet coil interlocked to the power supply.

4.4.4.5 Electrical Hazards for PAR Injection/Extraction Bumper/Kicker Magnets and Power Supplies

Three bumper/kicker magnets are used in the PAR. Two are used to bump the injection beam into orbit at a 60-Hz rate, and all three are used to bump the beam out of orbit for extraction at a 2-Hz rate. Each magnet is individually powered and rated at 6 kW average, a peak power of 125 MW at 50 kV and 2500 A. The pulse forming network (PFN) and switching circuit are located in the PAR enclosure. The magnet is enclosed in an aluminum enclosure (NEMA Type 1) with bolted covers and no exposed electrical components. The PFN is a triax cable and capacitors; the outer shield of the cable is connected to ground and the magnet enclosure. The PFN capacitors are housed in the magnet enclosure and thyratron enclosure with no exposed electrical components. The power switching circuit, or thyratron enclosure, is a metal, grounded enclosure with no exposed electrical components. This enclosure contains nonflammable dielectric cooling oil. The high voltage DC

charging power supply and control electronics are air- cooled and located on the roof of the PAR enclosure in a relay rack (NEMA Type 1). The relay rack's back door is interlocked. If a door is opened, the interlock will disable the high voltage power supply, and a shorting device (crowbar switch) will discharge the stored energy.

4.4.4.6 Electrical Hazards for PAR Vacuum Pressure Gauges and Ion Pumps

Pressure gauges (<180 VDC) and ion pumps (6 kV) have high voltage applied to the unit. The high voltage cable is ground-shielded and insulated at the rated voltages. Connectors shall adequately shield the feedthrough so that personnel cannot make contact with the high voltage leads. The high voltage cable is routed in conduit or cable trays approved for high voltage cables. The ion pump controllers and all high voltage cables are labeled as "High Voltage." Procedures are in place for testing, maintenance, and repair of these high voltage devices.

4.4.4.7 PAR Electrical Power and Maintenance

4.4.4.7.1 Required to Perform Maintenance on PAR Magnet Power Supply

- AC power locked out at first AC disconnect before the power supply.
- Ensure that all energy storage devices are discharged.
- Ensure AC power at power supply is off using appropriate metering.

4.4.4.7.2 Required to Perform Maintenance on PAR Magnet or rf Cavities

- The power supply is locked out at the power supply breaker. The power supplies powering the magnets on either side of the magnet or rf cavities being worked on must also be locked out.
- Use appropriate metering to verify no power is applied to the magnet or rf cavities being worked on, or to magnets on either side of it.

4.4.4.8 Required to Operate PAR Magnet Systems

- Magnet Power Emergency Off Buttons

  None of the PAR/LET MPEOBs can be depressed. There are ten MPEOBs in this interlock chain, six distributed around the inside of the PAR/LET enclosures, one in room B105 in Building 412, one outside the east wall of room B102 in Building 412, one on the PAR mezzanine, and one in the control room. Others will be added if needed. Once depressed, each button requires manual reset.

- ACIS

  ACIS must be complete for normal operation of the main dipoles. If test operation for these two magnet families requires personnel in the tunnel, ACIS is required to be complete in the test mode and working hot procedures are to be followed. The dipole magnets are in both ACIS chains.

- All magnet and power supply covers/panels must be installed.

- Magnet steel or enclosure and the power supply cabinet must be grounded to the technical equipment ground.

- All magnet and power supply interlocks must be complete.

- Posted signs and warning lights must be in place.

  - Flashing yellow light (area light) indicates all MPEOBs are reset and the magnets can be turned on; high current and magnet field are possible.

  - Flashing red light indicates high voltage possible (per magnet); it comes on when the magnet is powered.

4.4.5 Injector Synchrotron

The synchrotron dipole, quadrupole, and sextupole magnets are operated without bus covers. These magnets are normally interlocked off by the ACIS during Authorized access and Controlled Access to the enclosures. The Equipment Test Mode of ACIS will allow occupation of the enclosure under controlled access conditions, with ONE of the following systems energized: synchrotron dipole, quadrupole, sextupole, or correctors. Working hot log procedures and approval are required for entrance into the enclosure/tunnels during ACIS Equipment Test Mode operation. Group Lockout/Tagout of all power supplies is required for maintenance work in the enclosures. Group Lockout/Tagout will be conducted by the Operations group. They conduct an enclosure/tunnel search before releasing the Group Lock/Tagout. If personnel are required to perform work on the magnets or rf system (or a component nearby), they will follow normal lockout/tagout procedures as covered in Argonne ESH Manual Chapter 7-1 (ANL onlineB).

A significant number of equipment interlocks have been designed into the synchrotron for personnel electrical hazard protection. Operator training and operating procedures are in place to ensure that maintenance is performed in a safe manner. Therefore, the probability of occurrence of an event due to electrical hazards has been determined to be low. The consequence from an electrical hazard has been

determined to be medium, since the potential for electric shock with possible death exists. Therefore, the risk is low.

4.4.5.1 Electrical Hazards for Synchrotron rf

The synchrotron rf system consists of a klystron, klystron power supply, waveguide system, and four 5-cell rf cavities. The klystron power supply is connected through a fused disconnect switch to the 13.2-kV, 3-phase AC line. There is a 2.3-MVA, dry, stepdown transformer located on an outdoor pad. A low-voltage (1 to 2 kV) SCR phase-control voltage regulation system is located in the rf/extraction building. The output of the phase control regulation unit is connected through underground cables to an oil-filled step-up transformer and DC rectifier unit. The maximum output of the DC rectifier is 95 kVDC and 20 A, the level needed to drive the klystron to full rf output. The transformer-rectifier is located more than 25 feet from the building to satisfy fire safety regulations. There is also a crowbar unit located inside the building next to the klystron. The crowbar's purpose is to short out the high voltage DC output of the power supply in the event of an internal klystron vacuum arc and is designed to operate within 10 ms without faulting the 13.2-kV line.

The voltage and power levels in these units are extremely hazardous. If not properly handled, these voltages can cause severe burns or a lethal electric shock. In order to protect against injury, all pices of electrical equipment are located in cabinets built to NEMA 250 standards and equipped with additional restraining latching cables on the cabinet doors. Also, in order to enter any cabinet, a capture key arrangement is used that requires opening the input power feed via a switch to remove the key that unlocks the cabinet's doors. To provide a redundant protection against injury, each cabinet door is equiped with an interlock switch that will shut down the high voltage output and fire the crowbar if a cabinet door is opened. All the low-level controls are either isolated by fiber optic cables or have surge protection devices across the leads at the cabinet exit point to protect against a flashover surge traveling beyond the cabinet walls.

4.4.5.2 Electrical Hazards for Synchrotron Dipole Magnets and Power Supplies

The synchrotron's 68 main dipole magnets are used to establish a fixed closed orbit for a 450-MeV to 7.7-GeV beam during acceleration. All of the magnets are connected in series and are energized from two feed points 180° apart by two identical water-cooled, 700-kW ramped DC power supplies. These power supplies ramp at a 2-Hz rate to 4 MW peak power, at 1902 VDC and a current of less than 1100 A. The power supplies are connected master-slave and are located side-by-side in Building 412. The magnets are water-cooled with high-temperature sensors on the magnet coils interlocked to the power supply. The total stored energy is 302 kJ in the dipole magnets.

4.4.5.3 Electrical Hazards for Synchrotron Quadrupole Magnets and Power Supplies

Eighty quadrupole magnets are used to keep the synchrotron beam focused, allowing a 450-MeV to 7.7-GeV beam to pass through the vacuum chamber aperture with minimal loss during acceleration. They produce a 16.6-T/m gradient. The 80 magnets are divided into two families, with 40 magnets in each family. Each family is independently powered by a water-cooled, 230-kW DC power supply. These power supplies ramp at a 2-Hz rate to 449 kW peak power at 681 VDC and a current of less than 659 A. The power supplies are located side-by-side in Building 412. The magnets are water-cooled with high-temperature sensors on the magnet coil interlocked to the power supply. The total stored energy is 13 kJ in 1/2 of the quadrupole magnets.

4.4.5.4 Electrical Hazards for Synchrotron Sextupole Magnets and Power Supplies

Sixty-four sextupole magnets are used to keep the synchrotron beam focused, allowing a 450-MeV to 7.7-GeV beam to pass through the vacuum chamber aperture with minimal loss during acceleration. They produce a 248-T/m^2 gradient. The 64 magnets are divided into two families, with 32 magnets in each family. Each family is independently powered by a water-cooled, 11-kW DC power supply. These power supplies ramp at a 2-Hz rate to 22 kW peak power at 144 VDC and a current of less than 155 A. The power supplies are located side-by-side in Building 412. The magnets are water-cooled with high-temperature sensors on the magnet coil interlocked to the power supply.

4.4.5.5 Electrical Hazards for Synchrotron Correction Magnets and Power Supplies

Seventy nine correction magnets are used to make minor steering adjustments to the beam position in the vertical and horizontal planes as it passes around the synchrotron. Each magnet is independently powered by a water-cooled, 800-W bipolar power supply at ± 40 VDC and a current of less than ± 20 A. Forty power supplies are located in Building 412 and 39 are located in Building 420. The magnets are water-cooled with high-temperature sensors on the magnet coil interlocked to the power supply.

4.4.5.6 Electrical Hazards for Synchrotron Injection Kicker Magnet and Power Supply

One bumper/kicker magnet is used to bump the 450-MeV injection beam into orbit in the synchrotron for injection at a 2-Hz rate. The magnet and switching circuit are rated at 300 W average with a peak power of 21.3 MW at 15 kV and 1415 A. The

high voltage DC charging power supply switching and control circuit are located in Building 420 in a single relay rack (NEMA Type 1). The relay rack's back door is interlocked. If the door is opened, the interlock will disable the high voltage power supply, and a shorting device (crowbar switch) will discharge the stored energy. The switching circuit, thyratron, etc., and magnet are housed in an aluminum enclosure (NEMA Type 1) with bolted covers and no exposed electrical components. These enclosures are grounded and connected by the outer shield of the triax used as with the PFN. The main part of the PFN is attached to the ceiling of the synchrotron tunnel. All components are air-cooled.

4.4.5.7 Electrical Hazards for Synchrotron Extraction Kicker Magnet and Power Supply

This power system functions the same as described in section 4.4.5.6 except it is rated at 1200 W average with a peak power of 64.4 MW at 30 kV and 2146 A. It bumps the 7- to 7.7-GeV beam into the thin AC septum for extraction from the synchrotron. The power supply is located in Building 420.

4.4.5.8 Electrical Hazards for Synchrotron Vacuum Pressure Gauges and Ion Pumps

Pressure gauges (<180 VDC) and ion pumps (6 kV) have high voltage applied to the unit. The high voltage cable is ground-shielded and insulated at the rated voltages. Connectors shall adequately shield the feedthrough so that personnel cannot make contact with the high voltage leads. The high voltage cable is routed in conduit or cable trays approved for high voltage cables. The ion pump controllers and all high voltage cables are labeled as "High Voltage." Procedures are in place for testing, maintenance, and repair of these high voltage devices.

4.4.5.9 Synchrotron Electrical Power and Maintenance

4.4.5.9.1 Required to Perform Maintenance on Synchrotron Magnet Power Supply

- AC power locked out at first disconnect before the power supply.
- Ensure that all energy storage devices are discharged.
- Ensure AC power at power supply is off using appropriate metering.

4.4.5.9.2 Required to Perform Maintenance on Synchrotron Magnet or rf Accelerating Structure

- The power supply is locked out at the power supply breaker. The power supplies powering the magnets on either side of the magnet or rf accelerating structure being worked on must also be locked out.

- Use appropriate metering to verify no power is applied to the magnet or rf
- accelerating structure being worked on, or to magnets on either side of it.

4.4.5.9.3 Required to Operate Synchrotron Magnet Systems

- Magnet Power Emergency Off Buttons

  None of the synchrotron/HET MPEOBs can be depressed for operation of the magnets. There are 32 MPEOBs in this interlock chain, 23 distributed around the outside wall of the synchrotron tunnel at the beginning of every odd-numbered cell also at the injection and extractrin maze doors, two in the northwest corner of Building 412 by the raw supply for the ramped correctors supplies and inbetween BQF / BQD, one between the injection septum and kicker power supplies on the north side of Building 412, one next to RRBB1, one between the extraction septum and kicker power supplies on the north side of Building 420, one in the control room, one by the raw for the ramped correctors supplies in 420, and two by the synchrotron and HET power supply racks in Building 420, and one in the MCR. Once depressed, each button requires manual reset.

- ACIS

  The ACIS must be complete for normal operation of the main dipole magnet. If test operation for this magnet requires personnel in the tunnel, the ACIS is required to be complete in the test mode and working hot procedures are to be followed.

- All magnet and power supply covers/panels must be installed.
- Magnet steel or enclosure and the power supply cabinet be grounded to the technical equipment ground.
- All magnet and power supply interlocks must be complete.
- Posted signs and warning lights must be in place.
  - Flashing yellow light (area light) indicates all MPEOBs are reset and the magnets can be turned on; high current and magnet field are possible.
  - Flashing red light indicates high voltage possible (per magnet); it comes on when the magnet is powered.

4.4.6 High Energy Transport (HET) Line

The main dipole and quadrupole magnets cannot be operated with personnel in the synchrotron tunnel HET enclosure without working hot procedures being followed. All other magnets can be operated with personnel in the synchrotron tunnel HET enclosure. Work on or around the magnets requires three or more magnets to be totally de-energized and locked out, i.e., as a minimum, the magnet being worked on and its adjacent upstream and downstream magnets. This number may be increased depending on the covers/guards that need to be removed. "Working hot" operations will be performed only when absolutely necessary. In such cases, working hot permits are required in order to troubleshoot, test, or perform any type of work on energized electrical equipment. All APS and Argonne policies in regard to working hot procedures are followed, including:

- maintenance of working hot log books,
- complete training for personnel assigned to working hot,
  - CPR instruction,
  - required Argonne courses for a facility of this type,
- proper equipment, never working alone, and other relevant requirements.

A significant number of equipment interlocks have been designed into HET for personnel electrical hazard protection. Operator training and operating procedures are in place to ensure that maintenance is performed in a safe manner. Therefore, the probability of occurrence of an event due to electrical hazards has been determined to be low. The consequence from an electrical hazard has been determined to be medium, since the potential for electric shock with possible death exists. Therefore, the risk is low.

4.4.6.1 Electrical Hazards for HET Dipole Magnets and Power Supplies

The HET beamline has five dipole magnets. Four of these are series connected in sets of two magnets per power supply, and one magnet is individually powered. The series- connected magnets are used to bend a maximum 7.7-GeV beam onto axis for transport to the storage ring. The other magnet is used to bend the beam into a dump. Each power supply is an air-cooled, 18-kW power supply at 40 VDC and a current of less than 450 A. The power supplies are located in Building 420. The magnets are water- cooled with high-temperature sensors on the magnet coil interlocked to the power supply. The energy stored in a pair of dipole magnets is 6 kJ. The energy stored in an individually powered magnet is 3 kJ.

4.4.6.2 Electrical Hazards for HET Quadrupole Magnets and Power Supplies

Twelve quadrupole magnets are used to keep the HET beamlines focused, allowing a 7.7-GeV beam to pass through the vacuum chamber aperture with minimal loss. They produce an 18-T/m gradient. Each magnet is independently powered by an air-cooled, 2-kW power supply at 30 VDC and a current of less than 65 A. The power supplies are located in Building 420. The magnets are water-cooled with high-temperature sensors on the magnet coil interlocked to the power supply.

4.4.6.3 Electrical Hazards for HET Correction Magnets and Power Supplies

Eleven correction magnets are used to make minor steering adjustments to the beam position in the vertical and horizontal planes as it passes through the HET. Each magnet is independently powered by an air-cooled, 800-W bipolar power supply at ± 40 VDC and a current of less than ± 20 A. The power supplies are located in Building 420. The magnets are water-cooled with high-temperature sensors on the magnet coil interlocked to the power supply.

4.4.6.4 Electrical Hazards for HET Extraction Septum Magnets and Power Supplies (Synchrotron)

Two AC septum magnets are used to bend the synchrotron bumped beam onto axis for transport to the storage ring. The thin septum is 1.05 m in effective length with a maximum field of 0.73 T. The thick septum is 1.75 m in effective length with a maximum field of 1.08 T. Both operate at a frequency of 2 Hz with a pulse base width of 0.3 μs for the thin and 10 ms for the thick septum. The septum magnets are energized by two water-cooled, resonant pulsed power supplies located in Building 420. The power supply is rated at 10 kW and delivers a maximum 4.7-kA peak pulse into the thin septum impedance matching transformer's primary. The transformer is mounted on the magnet support, and its secondary is connected to the magnet's input terminals, delivering a peak current of 14.2 kA to the magnet. A similar power supply is connected to the thick septum magnet and delivers a peak current of 725 A. The maximum power supply output voltage is 2 kV. Each power supply is located in a single cabinet with interlocked door switches. If a door is opened, the interlock will disable the high voltage power supply, and shorting devices (crowbar switches) will discharge the stored energy. Visual indicators of power supply status are provided. The power circuit has a maximum stored energy of 18 kJ.

4.4.6.5 Electrical Hazards for HET Injection Septum Magnets and Power Supplies (Storage Ring)

These two power systems function the same as described in section 4.4.5.4 except the HET beam is steered to a location where it can be bumped into the storage ring. The power supplies are located in Building 400 on top of the storage ring tunnel. The power circuit has a maximum stored energy of 18 kJ.

4.4.6.6 Electrical Hazards for HET Vacuum Pressure Gauges and Ion Pumps

Pressure gauges (<180 VDC) and ion pumps (6 kV) have high voltage applied to the unit. The high voltage cable is ground-shielded and insulated at the rated voltages. Connectors shall adequately shield the feedthrough so that personnel cannot make contact with the high voltage leads. The high voltage cable is routed in conduit or cable trays approved for high voltage cables. The ion pump controllers and all high voltage cables are labeled as “High Voltage.” Procedures are in place for testing, maintenance, and repair of these high voltage devices.

4.4.6.7 HET Electrical Power and Maintenance

4.4.6.7.1 Required to Perform Maintenance on HET Magnet Power Supply

- AC power must be locked out at first disconnect before the power supply.
- Ensure that all energy storage devices are discharged.
- Ensure AC power at power supply is off using appropriate metering.

4.4.6.7.2 Required to Perform Maintenance on HET Magnet

- The power supply is locked out at the power supply breaker. The power supplies powering the magnets on either side of the one being worked on must also be locked out.
- Use appropriate metering to verify no power is applied to the magnet being worked on.

4.4.6.7.3 Required to Operate HET Magnet Systems

- Magnet Power Emergency Off Buttons

The HET magnet system is split into 2 halves the Booster / HET MPEOB and the Zone F MPEOB.

The first part is the synchrotron/HET MPEOB described in section 4.4.5.9.3. None of the synchrotron/HET MPEOBs can be depressed for operation of the magnets.

The second is the Zone F MPEOB system.

There are many MPEOBs input in this interlock chain distrubited around Zone F and HET, they range from the buttons on each double sector interlock rack to the door switches on each cabinet, the HET is connected with buttons by the HET dipoles and a MPEOB button mounted on the wal by HET RR3.

- All magnet and power supply covers/panels must be installed.
- Magnet steel or enclosure and the power supply cabinet must be grounded to the technical equipment ground.
- All magnet and power supply interlocks must be complete.
- Posted signs and warning lights must be in place.
    - Flashing yellow light (area light) indicates all MPEOBs are reset and the magnets can be turned on; high current and magnet field are possible.
    - Flashing red light indicates high voltage possible (per magnet); it comes on when the magnet is powered.

4.4.7 Storage Ring

All magnets can be operated with personnel in the storage ring tunnel enclosure. Work on or around the magnets require three or more magnets to be totally de-energized and locked out, i.e., as a minimum, the magnet being worked on and its adjacent upstream and downstream magnets. This number may be increased depending on the covers/guards that need to be removed. “Working hot” operations will be performed only when absolutely necessary. In such cases, working hot permits are required in order to troubleshoot, test, or perform any type of work on energized electrical equipment. All APS and Argonne policies in regard to working hot procedures are followed, including:

- maintenance of working hot log books,
- complete training for personnel assigned to working hot,
    - CPR instruction,
    - required Argonne courses for a facility of this type,

- proper equipment, never working alone, and other relevant requirements.

A significant number of equipment interlocks have been designed into the storage ring for personnel electrical hazard protection. Operator training and operating procedures are in place to ensure that maintenance is performed in a safe manner. Therefore, the probability of occurrence of an event due to electrical hazards has been determined to be low. The consequence from an electrical hazard has been determined to be medium, since the potential for electric shock with possible death exists. Therefore, the risk is low.

4.4.7.1 Electrical Hazards for Storage Ring rf

The storage ring rf system consists of four rf stations. Each rf station consists of a klystron, klystron power supply, waveguide system, and four single-cell rf cavities. The klystron power supply is connected through a fused disconnect switch to the 13.2-kV, 3-phase AC line. There is a 2.3 MVA, dry, stepdown transformer located on an outdoor pad. A low-voltage (1 to 2 kV) SCR phase-control voltage regulation system is located in the rf/extraction building. The output of the phase control regulation unit is connected through underground cables to an oil-filled step-up transformer and DC rectifier unit. The maximum output of the DC rectifier is 95 kVDC and 20 A, the level needed to drive the klystron to full rf output. The transformer-rectifier is located more than 25 feet from the building to satisfy fire safety regulations. There is also a crowbar unit located inside the building next to the klystron. The crowbar's purpose is to short out the high voltage DC output of the power supply in the event of an internal klystron vacuum arc and is designed to operate within 10 μs without faulting the 13.2- kV line.

The voltage and power levels in these units are extremely hazardous. If not properly handled, these voltages can cause severe burns or a lethal electric shock. In order to protect against injury, all pieces of electrical equipment are located in cabinets built to NEMA 250 standards, and equipped with additional restraining latching cables on the cabinet doors. Also, in order to enter any cabinet, a capture key arrangement is used that requires opening the input power feed via a switch to remove the key that unlocks the cabinet's door. To provide a redundant protection against injury, each cabinet door is equiped with an interlock switch that will shut down the high voltage output and fire the crowbar if a cabinet door is opened. All the low-level controls are either isolated by fiber optic cables or have surge protection devices across the leads at the cabinet exit point to protect against a flashover surge traveling beyond the cabinet walls.

4.4.7.2 Electrical Hazards for Storage Ring Dipole Magnets and Power Supplies

The storage ring's 80 main dipole magnets are used to establish a fixed orbit for a 7- to 7.7-GeV beam during accumulation and beam life. An 81st magnet is located with

the power supply and used for field feedback. All of the magnets are connected in series, powered by a water-cooled, 850-kW DC power supply at 1700 VDC and a current of less than 500 A. The power supply is located in room A004, Building 420. The magnets are water-cooled with high-temperature sensors on the magnet coils interlocked to the power supply. The total stored energy is 514 kJ in the dipole magnets.

4.4.7.3 Electrical Hazards for Storage Ring Quadrupole Magnets and Power Supply

Four hundred quadrupole magnets are used to keep the storage ring beam focused, allowing a 7- to 7.7-GeV beam to pass through the vacuum chamber aperture with minimal loss. They produce a 21-T/m gradient. The 400 magnets vary in length from 0.5 m to 0.8 m. Each is independently powered by a water-cooled, 10- to 14-kW DC-to-DC converter at 20 to 30 VDC and a current of less than 460 A. The converters for two sectors are powered by a set of four raw power supplies, AC-to-DC converters, at 40 to 60 VDC and a current of less than 230 A per converter. Up to eight converters, both unipolar and bipolar, are housed in a converter cabinet (NEMA Type 1) with a microprocessor and required interface to control the converters. There are 200 converter cabinets around the ring, one per magnet girder, not including the ID girders. The power supplies and DC-to-DC converters are located in Buildings 400 and 410 on top of the storage ring tunnel. The raw power supplies are interlocked with the converters in two sectors with five cabinets upstream and five cabinets downstream. The magnets are water-cooled with high-temperature sensors on the magnet coil interlocked to the converter. The energy stored in a quadrupole magnet is 1 kJ or less.

4.4.7.4 Electrical Hazards for Storage Ring Sextupole Magnets and Power Supplies

Two hundred eighty sextupole magnets are used to keep the storage ring beam focused, allowing a 7- to 7.7-GeV beam to pass through the vacuum chamber aperture with minimal loss. They produce a 405-T/m^2 gradient. Each magnet is independently powered by a water-cooled, 6-kW DC-to-DC converter, at 30 VDC and a current of less than 250 A. The converters for two sectors are powered by a set of four raw power supplies, AC-to-DC converters, at 60 VDC and a current of less than 100 A per converter. These converters are located in the converter cabinets described in section 4.4.7.3. The raw power supplies are interlocked with the converters in two sectors, five cabinets upstream and five cabinets downstream. The magnets are water-cooled with high- temperature sensors on the magnet coil interlocked to the converter.

4.4.7.5 Electrical Hazards for Storage Ring Correction Magnets and Power Supplies

Six hundred thirty-four (634) correction magnets with both horizontal and vertical correction windings are used to keep the storage ring 7- to 7.7-GeV beam on the required orbit, and there are 80 trim dipole coils and 19 skew quadrupoles used for orbit correction and beam focusing. Each correction magnet winding is independently powered by a water-cooled, 10-kW bipolar DC-to-DC converter at ± 40 VDC and a current of less than ± 150 A. Each trim dipole winding is independently powered by a water- cooled, 4-kW bipolar DC-to-DC converter at ± 40 VDC and a current of less than ± 54 A. Each skew quadrupole magnet is independently powered by a water-cooled, 1-kW bipolar DC-to-DC converter at ± 40 VDC and a current of less than ± 10 A. The converters for two sectors are powered by a set of four raw power supplies, AC-to-DC converters, at 62 VDC and a current of less than 100 A per converter. These converters are located in the converter cabinets described in section 4.4.7.3. The raw power supplies are interlocked with the converters in two sectors, five cabinets upstream and five cabinets downstream. The magnets are water-cooled with high-temperature sensors on the magnet coil interlocked to the converter.

4.4.7.6 Electrical Hazards for Storage Ring Injection Bumper Magnets and Power Supplies

Four bumper magnets are used in the storage ring to bump the injection beam into orbit at a 2-Hz rate. Each magnet is individually powered and rated at 2 kW average, a peak power of 61 MW at 15 kV and 4060 A. The PFN, switching circuit, charging power supply, and control circuitry are located in Building 410 on top of the storage ring enclosure in a relay rack (NEMA Type 1). The relay rack's back door is interlocked. If the door is opened, the interlock will disable the high voltage power supply, and a shorting device (crowbar switch) will discharge the stored energy. The switching circuit, thyratron, etc., are housed in an aluminum enclosure (NEMA Type 1) with bolted covers and no exposed electrical components. This enclosure is grounded. All components are air-cooled.

4.4.7.7 Electrical Hazards for Storage Ring Vacuum Pressure Gauges and Ion Pumps

Pressure gauges (<180 VDC) and ion pumps (6 kV) have high voltage applied to the unit. The high voltage cable is ground-shielded and insulated at the rated voltages. Connectors shall adequately shield the feedthrough so that personnel cannot make contact with the high voltage leads. The high voltage cable is routed in conduit or cable trays approved for high voltage cables. The ion pump controllers and all high voltage cables are labeled as "High Voltage." Procedures are in place for testing, maintenance, and repair of these high voltage devices.

4.4.7.8 Storage Ring Electrical Power and Maintenance

4.4.7.8.1 Required to Perform Maintenance on Storage Ring Magnet Power Supply

- AC power locked out at first disconnect before the power supply.
- Ensure that all energy storage devices are discharged.
- Ensure AC power at power supply is off using appropriate metering.

4.4.7.8.2 Required to Perform Maintenance on Storage Ring Magnet

- The power supply is locked out at the power supply breaker. The power supplies powering the magnets on either side of the one being worked on must also be locked out.
- Use appropriate metering to verify no power is applied to the magnet being worked on.

4.4.7.8.3 Required to Operate Storage Ring Magnet Systems

- Magnet Power Emergency Off Buttons (MPEOB)

For the storage ring dipole, none of the storage ring's MPEOBs can be depressed. There are 42 MPEOBs in this interlock chain: 20 distributed around the inside of the storage ring tunnel at the beginning of every odd-numbered sector, 20 on top of the tunnel by the raw power supplies for each pair of sectors, one in the dipole power supply room in Building 420, and one in the control room. Any button will shut off all magnets including the dipoles in the zone where the button is located. Once depressed, each button requires manual reset. The MPEOBs located in the control room and the dipole power supply room will shut off all storage ring magnets.

- ACIS

  ACIS is broken into six zones (A through F) for the storage ring; all zones must be secure for normal operation of the main dipole magnets. If test operation of the main dipole magnets requires personnel in the tunnel, ACIS is required to be in the controlled access mode and equipment test mode and working hot procedures are to be followed. These magnets are in both ACIS chains.

- All magnet and power supply covers/panels must be installed.
- Magnet steel or enclosure and the power supply cabinet must be grounded to the technical equipment ground.
- All magnet and power supply interlocks must be complete.

- Posted signs and warning lights must be in place.
  - Flashing yellow light (area light) indicates all MPEOBs are reset and the magnets can be turned on; high current and magnet field are possible.
  - Flashing red light indicates high voltage possible (per magnet); it comes on when the magnet is powered.

4.4.7.9 Electrical Hazards for Insertion Devices and Front Ends

Electrical hazards in the insertion devices and front ends are present from both AC and DC sources. During bakeout of the ID vacuum chamber, resistive heating elements are used to elevate the chamber temperature to 150° C. For front-end bakeout, heater jackets are used. The heaters are powered by fused 110-VAC, 20-A circuits. All wiring is in conformance with the National Electric Code, and bakeout procedures require that the heaters be inspected at each use for frayed or damaged wiring. During normal operation, the insertion device magnetic assembly requires no electrical power, but the gap of the assembly is moved by stepper motors powered by 208-VAC, 12-A controller. The design of the connectors prevents inadvertent contact with the energized circuit, even when disconnected.

The vacuum in the insertion device vacuum chamber is maintained through the pumping provided by nonevaporable getter strips in conjunction with ion pumps. During activation, the NEG pumps are heated internally by connection to a 150-VDC, 18-A source. Continuous heating is not required for pumping after activation. Ion pumps, powered from a 5-kV (500 mA) controller, provide additional pumping for the insertion device vacuum chamber and the primary pumping for the front end. Ion pump high voltage (HV) cables are clearly marked and are routed through a divided trough in the cable tray dedicated to HV cables.

4.4.8 Electrical Hazards for Experimental Beamlines

The electrical power distributed to the beamlines is available primarily from a 115/208 volt system. The installation of this system conforms to all applicable codes and requirements. All beamline equipment must also conform to codes and requirements. Any noncommercial equipment used on the beamlines must pass an electrical inspection by the Beamline Management safety personnel and must conform to Argonne requirements.

High power or high voltage equipment may be included in the design of certain beamlines. The beamline review process will identify such equipment, and additional safety requirements (such as emergency shutdown buttons) will be placed on the Beamline Management to comply with all necessary regulations.

All personnel performing service on equipment will be required to receive training in and to adhere to Argonne lockout/tagout policies. Compliance with the electrical safety requirements will be strictly enforced. Therefore, the probability of occurrence of an event due to electrical hazards has been determined to be low. The consequence from an electrical hazard has been determined to be medium. Therefore the risk is low.

4.5 Fire Hazards

A fire protection appraisal was conducted of the APS facility during December 1992 and January 1993 by an independent fire protection engineering consulting firm (March 1993). The appraisal was conducted in accordance with the requirements established in DOE Order 5480.7A (DOE 1993c), Argonne National Laboratory Guidelines, and other DOE Orders.

The report concluded that the APS project complies with the Department of Energy Fire Protection Guidelines. Fire protection systems and features have been considered for the various occupancies in the APS project, and have been provided depending upon the nature and extent of the hazards.

All APS facilities have been reviewed by the facility designers for compliance with life safety requirements of NFPA 101. Due to the unique nature of some APS facilities, such as the storage ring and the synchrotron enclosure, special-purpose industrial occupancy classifications have been used to allow greater flexibility, placement, and arrangement of exits.

No significant fuel sources for fire are located or will be permitted on the floor of the experiment hall. All potential fire sources will be reviewed during the review process, and, if required, additional methods for minimizing the fire hazard will be implemented by Beamline Management.

Exterior exposure hazards, such as transformers, in the area of the rf extraction building have been appropriately addressed by the use of spatial separation, equipment specification and/or suppression systems.

The probability of a fire occurring has been determined to be medium. The existing fire protection will ensure the consequences of a fire will be low. Therefore, the risk due to fire is low.

4.6 Vacuum and Pressure Hazards

In order to maintain an adequate particle beam lifetime for injection and storage and to prevent contamination, the vacuum system is constructed with metal tube using bolted, all-metal seals. However, there are several locations that have glass windows

or ceramic-to-metal seals. Because most of the system is metal, the vacuum system is generally safe during operation.

The first procedure to ensure safety around the vacuum system is to clearly identify the areas where problems could occur. The hazards include debris from implosion, high voltage, compressed gas, and hot surfaces. The second procedure is to restrict access to the vacuum to trained personnel, especially during maintenance and testing.

The chambers that have glass windows or ceramic-to-metal seals shall be rated to withstand at least 1 atmosphere pressure differential. The windows or feedthroughs shall be shielded to withstand casual blows or objects striking.

When the vacuum is vented for repair or component replacement, a dry nitrogen purge is planned for venting. Because the vacuum lines are small in diameter, it is impossible for a person to insert his/her head into the nitrogen atmosphere. There are no oxygen- deficiency hazards associated with operation and maintenance of the APS vacuum system.

After venting of a vacuum chamber in the PAR, booster, storage ring, or beamline front end, the vacuum system must be baked out for proper UHV operation. Bakeout is generally not required after vacuum work in the linac. The bakeout temperature for these systems is 130 degrees C. In the PAR, booster, front ends, and storage ring valves, this is done using heat tapes installed by trained personnel. Signs notifying personnel that the system is hot will be posted and access restricted. In the storage ring, the bakeout is done by a recirculating pressurized hot water system, further described in section 4.12.

Vacuum and pressure hazards associated with the insertion devices and front ends are not unique from those described above for the accelerator systems.

The beamlines will generally be maintained and operated under vacuum. The vacuum requirements for the beamlines are not as stringent as they are for the storage ring; therefore, for most beamlines, the required vacuum will be between 1×10^{-4} and 1×10^{-9} Torr. Implosion of any vacuum component could pose a possible health risk from small flying objects. All vacuum components in the system are made of heavy wall material and pose little threat of implosion when evacuated.

Vacuum gate valves are driven by compressed air from a facility air manifold. Should the connections fail, compressed air could escape, possibly resulting in small flying objects. Adequate protection will be required in the air manifold to prevent over pressurization.

The Beamline Management will be responsible for identifying potential hazard locations and providing the proper posting, operator training, and operating

procedures. The APS will review the adequacy of the Beamline Management training and procedures.

The probability of an injury occurring has been determined to be medium. The consequences will be low. Therefore, the risk is low.

4.7 Magnetic Field Hazards

Magnets are used in the accelerator and storage ring to bend and focus the electron beams along the desired orbits. The high magnetic fields produced by each magnet are primarily contained inside the bore and are inaccessible to personnel. The ring magnets do have fields greater than 10^{-3} T (10 G) extending less than 10.2 cm (4 in) beyond the core ends. The pulsed septum magnets used for injection and extraction of the particle beams have fringe fields at one side of the magnets. The locations of any regions with fields greater than 10^{-3} T (10 G) will be plainly marked and "No Pacemakers" signs will be posted. Ring access with magnets powered is coordinated with the Operations group. Personnel involved in operating, maintaining, and testing of magnets will be trained in the hazards and precautions associated with magnetic energy, including those relating to ferrous metals, health effects, and medical implants. The use of ferrous metal tools will not be allowed near the gaps of energized electromagnets. The hazards and safeguards appropriate to these magnets are identical to those described below for insertion devices.

The current APS permanent magnet assemblies, such as the APS insertion devices or booster beam dump magnet, contain high amounts of stored energy. The strong static magnetic field assemblies are capable of pulling ferromagnetic tools from hands and can also cause injury if hands or fingers are trapped against the assembly by the action of the magnetic field on a ferromagnetic object. The permanent magnets are brittle and may shatter when struck, producing flying debris with sharp edges. The high magnetic fields can influence the performance of implanted ferromagnetic devices such as cardiac pacemakers, suture staples, aneurysm clips, artificial joints, and prostheses.

No magnetic devices, other than standard small motors or vacuum pumps, are expected to be used in beamlines. However, specialized beamlines may include devices capable of producing magnetic fields capable of posing a safety hazard. These devices will be reviewed by the APS, and, if required, the Beamline Management will prepare posting plans and any other necessary methods for mitigating the hazards.

Accessibility to magnetic fields is limited. Operator training and operating procedures are in place. The probability of occurrence has been determined to be low. The consequence has been determined to be low. Therefore, the risk of magnetic field hazards is extremely low.

4.8 Cryogenic Hazards

Small quantities of liquid nitrogen will be used for maintenance and testing in accelerator enclosures. The main hazard occurs while filling small dewars from large liquid nitrogen storage dewars. The technicians use face shields, rubber gloves, and protective clothing to prevent liquid spatter from hitting exposed skin or eyes.

Cryogenic systems may be utilized as part of the operation of the beamlines. Primary applications consist of liquid nitrogen transfer from various size dewars for use in vacuum leak detectors, cryogenic vacuum pumps, etc. The APS will provide appropriate procedures, as well as insulated gloves and safety goggles and/or face shields, at main transfer locations. All personnel involved in these operations will be required to take a cryogenic safety course and to comply with both the APS and the beamline safety procedures. Any other nonstandard cryogenic systems that may be included in a beamline design will be reviewed by the APS beamline review process.

Operator training and operating procedures are in place. The probability of occurrence has been determined to be low. The consequence has been determined to be low. Therefore, the risk of cryogenic hazards is extremely low.

4.9 Chemical Hazards

Flammable materials and chemical storage cabinets are provided throughout the facility. Satellite waste accumulation areas are established as needed. This provides control over the types and volume of chemicals stored and used in work areas. All operations and maintenance personnel are trained in the proper use of MSDSs and receive training, as necessary, in specific chemical handling and use.

Lead is used for radiation shielding at APS. Lead brick, shot, and wool are used as shield material in beam stops, penetrations, and supplemental shielding. All lead handling operations comply with current OSHA requirements as defined in 29 CFR Part 1910, Subpart Z (U.S. Congress 1996a) and 29 CFR Part 1926, Subpart D (U.S. Congress 1996b).

Flammable materials and chemical storage cabinets will be required at all applicable beamline locations. These will be determined during the beamline review process. Waste accumulation areas will be established as needed, and the responsible Beamline Management personnel will be required to receive the appropriate training. Strict requirements are placed on the Beamline Management to control the types and volume of chemicals stored and used in work areas. Material Safety Data Sheets (MSDSs) will be required to be made available for all chemicals used. All beamline personnel will be trained in the proper use of the MSDSs and will receive training, as necessary, in specific chemical handling and use.

Operator training and operating procedures are in place. The probability of occurrence of a significant chemical exposure has been determined to be medium. The consequence has been determined to be low. Therefore, the risk of chemical hazards is low.

4.10 Oxygen Deficiency Hazards

In the linac area the electron gun enclosure is pressurized with dry nitrogen. However, the volume is small and inaccessible. The enclosure must be removed to access the electron gun which rapidly vents the volume to the atmosphere.

The buncher waveguide is pressurized with SF_6, and the total volume is small compared to the volume of either the klystron gallery or the linac shielded enclosure. Adequate ventilation also exists to dissipate any released gas.

The balance of the accelerator enclosures is well ventilated and contains no materials in sufficient quantity to contribute to an oxygen-deficient atmosphere.

Any components that have the potential for containing an oxygen-deficiency hazard will be reviewed during the beamline review process. Appropriate protection, training, and procedures will be required to be put in place to ensure that the hazard is appropriately mitigated.

The probability of oxygen deficiency hazard events are extremely unlikely due to the conditions in the APS. The probability of occurrence has been determined to be extremely low. The consequence has been determined to be medium. Therefore, the risk of oxygen deficiency hazards is extremely low.

4.11 Noxious Gas Hazards

Ozone (O_3) and other noxious gases (nitrogen oxides) will be produced as the result of photon irradiation of air molecules. The average concentrations for year-round operation of the storage ring and 10% operation of the injector system are listed in Table 4.14. Included in the table are estimates of the contribution due to LEA operation, assuming 50% operation time. Noxious concentrations are below the threshold limit value (TLV) and should not constitute a hazard in the areas of the linac, PAR, synchrotron, storage ring, and LEA including the diagnostic beamlines as addressed in Appendix C of (Moe 1994).

Ozone is produced in air by sources emitting ultraviolet (UV) radiation at wavelengths below 250 nm. All operation of lasers at these wavelengths will use ventilation, enclosed beams, or other means to limit exposure to ozone to as low as practical below the established time-weighted average (TWA) of 0.05 ppm and 0.1 mg/m^3.

Hydrochloric acid will be produced in the unlikely event of a cable fire since most cable insulating material is PVC. The fire suppression system is designed to minimize the spread of a fire and therefore minimize the production of hydrochloric acid resulting from a cable fire. Individuals caught in a location where they might breathe these noxious gases could experience respiratory damage. Special precautions (such as using self-contained breathing apparatus) will be taken by the Argonne Fire Department in the event of a cable fire.

There are two typical situations in which ozone (O_3) may be produced by a beamline. The obvious case is an experiment in which the white beam travels through an air path. In this situation, the ozone concentration can quickly exceed the threshold limit value (TLV) if appropriate steps are not taken. A second case occurs when a white beam inside a vacuum chamber strikes a component, and the consequential scatter ionizes some of the oxygen in the air surrounding the vacuum chamber. Although the rate of production for ozone from scattered radiation is much lower than that for the open white beam, the levels can exceed the TLV if the ozone concentration is allowed to reach saturation with no ventilation.

Monochromatic beams (defined as below 0.1% bandpass) do not present an ozone problem. Beams that have been reflected from mirrors (“pink beams”) will usually produce ozone in a way similar to white beams from the same source.

Table 4.14 Noxious Gas Average Concentrations

Noxious Gas	TLV	Concentration
Linac		
O_3	0.05 ppm	3.2×10^{-4} ppm
NO_2	3.0 ppm	1.5×10^{-4} ppm
HNO_3	2.0 ppm	4.8×10^{-5} ppm
PAR		
O_3	0.05 ppm	1.8×10^{-5} ppm
NO_2	3.0 ppm	8.7×10^{-6} ppm
HNO_3	2.0 ppm	2.7×10^{-6} ppm
Synchrotron		
O_3	0.05 ppm	4.3×10^{-5} ppm
NO_2	3.0 ppm	2.1×10^{-5} ppm
HNO_3	2.0 ppm	6.5×10^{-6} ppm
LEA		
O_3	0.05 ppm	2.7×10^{-3} ppm
NO_2	3.0 ppm	1.3×10^{-3} ppm
HNO_3	2.0 ppm	4.1×10^{-4} ppm
Storage Ring		
O_3	0.05 ppm	4.7×10^{-5} ppm
NO_2	3.0 ppm	2.3×10^{-5} ppm
HNO_3	2.0 ppm	7.1×10^{-6} ppm

The APS experiment hall has provisions for installing exhaust systems to provide ventilation of first optic and experiment enclosures. The APS is also investigating several methods of filtering or "destroying" ozone. The APS has prepared a document "Guidelines for Ozone Mitigation at the APS" as part of the APS Beamline Design and Construction Requirements (ANL 1994b). The guidelines provide information to Beamline Management for calculating the potential ozone production. It also states the APS Ozone Mitigation Policy. The Beamline Review Committee will review the ozone producing potential of each beamline and will require the Beamline Management to install appropriate mitigating and/or detection systems, as necessary. The Beamline Management will also need to provide operator training and operating procedures for beamlines with ozone-producing potential.

The use or generation of other noxious gases is not anticipated as part of the beamline operation. The potential for creation of a noxious gas hazard will be identified during the beamline review process, and an adequate control strategy will be required to be implemented prior to operation of the beamline.

The probability of occurrence for accelerator systems has been determined to be medium, as this occurrence is predicated on the expected frequency of a fire occurring. The consequence has been determined to be low. For the experimental beamlines, the probability of occurrence has been determined to be low; the consequence has been determined to be medium. In either case, the risk of noxious gas hazards is low.

4.12 Mechanical Hazards

APS buildings contain rotating machinery such as pumps, blowers, and fans. Proper guarding is in place and existing procedures require the equipment to be locked out before guards are removed for servicing of the equipment. Pinch points shall be covered or labeled. Assembly pinch points have been reasonably addressed during design. In some cases, special hardware has been fabricated. Specialized tools have been identified and purchased as necessary.

Pneumatic actuators shall have the cylinder vented and cycled to its rest state before maintenance. All pneumatic devices shall have local shut-off valves.

Positioning of much of the equipment and components at APS requires the use of forklifts, moveable tables, cranes, and specialized lifting equipment. The heaviest items to be lifted are the storage ring dipole magnets (5330 kg) and the storage ring support girders (1400 kg). The other storage ring magnets weigh in the range of 482-1850 kg. The magnets are supported by the steel girder assemblies. The design criteria for the girder assemblies was based on desired deflection characteristics, resulting in low stresses with applied magnet loads. Dynamic response to vibration tests of the girder assembly showed acceptable results, indicating a safe capacity for the static magnet loads. Use of lifting equipment is governed by Argonne safety standards and procedures. Rigging operations are performed by properly trained and licensed operators using certified lifting equipment. When required, handling and operating procedures have been documented, reviewed with personnel, and distributed. Vacuum and Mechanical personnel responsible for these areas in assembly have received relevant Argonne/ESH training courses.

The girder assemblies are transported by a girder transporter. The transporter consists of a tug, a set of two dollies, and a locating cart. An installation procedure has been written which describes every step of this installation process.

The bakeout of the storage ring vacuum chambers is accomplished by circulating pressurized hot water through aluminum vacuum chamber extrusions. A bakeout

operating procedure and log sheet detail every step of the process for each sector. Bakeout procedures are performed at an expected maximum temperature and pressure of 130° C (266° F) and 7.60×10^2 kPa (110 psig). Bakeout water piping was hydrostatically tested at 250 psig after installation and prior to first use.

The storage ring bakeout skids have pump and motor assemblies that incorporate metal guards around rotating elements. Procedures require the equipment to be locked/tagged out before servicing.

A 56.8-ℓ (15-gallon) tank is included in the bakeout system design to provide an expansion reservoir for water in the system as it is heated. A cushion of nitrogen gas occupies 1/2 to 2/3 of the tank. Two relief valves located on the respective expansion tanks and bakeout skids provide the last measure of protection against over-pressurization of the system during operation should automatic control hardware and mechanical interlocks fail. Both valves are set for 1.24×10^2 kPa (180 psig).

The water line connections between the vacuum chamber sections and the water supply and return headers are made using thick-walled stainless steel tubing and sections of flexible hose rated for 1.72×10^3 kPa (250 psig) at 207° C (405° F). These flexible elements are necessary for taking up mechanical expansion and contraction of components when heated and cooled.

During a bakeout, signs are posted at the approach ways that specify the sectors as restricted access areas to AUTHORIZED PERSONNEL ONLY. Warning signs identifying BAKEOUT IN PROGRESS are posted inside the storage ring and emergency stop buttons are available at the beginning and end of the applicable sector. For personnel working in the area, safety panels are used as protective barriers from the heated surfaces of the girder assemblies which could cause burns. Applicable ratchet doors are locked and keys are maintained under procedural control in the Main Control Room.

On the bakeout skid, the heater control panel enclosure and door handle are interconnected in order to cut off the power if someone opens the cabinet. The heater bank circuitry is interlocked to the water pump motor to assure that the pump motor is energized before the heater(s) circuits are energized.

The water systems for the storage ring have relief valves for hydrostatic pressure. The systems have interlocks for temperature, pressure, and flow. When any of these conditions exceed or drop below a predetermined condition,power to the pumps is turned off. Resistivity of the water is continuously monitored to ensure water quality.

As of January 2003, the bakeout procedure was executed nearly 80 times without incident.

On the magnets, high temperature sensors will turn off the power to the magnets if the temperature on the magnets exceeds 71° C (160° F). This will prevent water pressure buildup in the magnet coils even if the flow is interrupted. The high temperature sensors are located on the return water supply of the water-cooled magnets and on the coils for the air-cooled magnets. Redundant sets of series of high temperature sensors are used.

Positioning of the insertion devices requires the use of forklifts, movable tables, and specialized lifting equipment. The storage ring Undulator A ID magnet assembly weighs over 3000 kg and the vacuum chambers weigh between 130 and 230 kg (depending on the length). Dropping or bumping of equipment during positioning or repositioning could result in injury to personnel and damage to the components. Use of lifting equipment is governed by Argonne safety requirements and procedures. Hoisting operations will only be performed by properly licensed operators using certified lifting equipment. Lifting and hoisting hazards are unlikely, since it is not anticipated that the insertion devices will need to be disassembled. Occasionally, an ID magnet and gap separation assembly may be moved from one sector to another. Steerable casters are provided for rolling the assembly through the storage ring tunnel. A fully steerable towing tractor with continuously variable transmission will be used for this purpose. An approved operating procedure will be used to fully define the move and only trained personnel will be involved.

The heaviest items to be lifted are the front-end fixed mask and photon shutter (1000 kg). The components are supported by the steel table assemblies. The design criteria for the support assemblies were based on desired deflection characteristics, resulting in low stresses with applied dynamic loads. Dynamic response to vibration tests of the support tables showed acceptable results, indicating a safe capacity for the static loads. Use of lifting equipment is governed by Argonne safety standards and procedures. Where required, handling and operating procedures have been documented on drawings, reviewed with personnel, and distributed.

The mechanical arrangement of the insertion device and the vacuum chamber limits the gap pinch area to a small area near the ends. The movement of the gaps is sufficiently slow to allow time to avoid injury. Since the magnet gap can be controlled remotely, emergency stop buttons are provided on the device. Signs are placed near the hazard region to warn personnel. Pinch hazards also exist in the mechanical linkage that drives the gap. These areas are normally enclosed and marked and would only be opened by trained personnel during maintenance.

In the front-end components, pinch points have been reasonably addressed during design. Where required, specialized tooling and tools have been identified and have been fabricated or procured. Pinch points will be labeled and, if possible, covered.

Beamline components are supported on girders. The girders have to provide positional stability to the components; therefore, the designs need to be conservative.

A mechanical hazard event may occur when these components are installed or relocated as part of beamline installation or modification. Use of lifting equipment is governed by Argonne safety requirements and procedures (ANL onlineC). Hoisting operations will only be performed by properly licensed operators using certified lifting equipment.

Beamlines may contain rotating machinery, such as pumps, blowers, and fans. Proper guarding will be required to be in place, and the Beamline Management will be required to prepare procedures requiring the equipment to be locked/tagged out before guards are removed for servicing of the machinery.

All potential pinch points will be required to be identified by appropriate warning signs, and the beamlines will be required to prepare appropriate servicing procedures.

The probability of occurrence of a mechanical hazard event has been determined to be medium. The hazard event consequence has been determined to be low. Therefore, the risk is low.

4.13 Environmental Hazards

Environmental hazards in the Chicago Area consist of high winds and limited seismic activity.

The average annual precipitation at Argonne is 800 mm (31.5 in) and is primarily associated with thunderstorm activity in the spring and summer. The annual average accumulation of snow and sleet at Argonne is 830 mm (32.7 in) (DOE 1982). Snowstorms resulting in accumulations greater than 150 mm (5.9 in) occur only once or twice each year on the average, and severe ice storms occur only once every four or five years (Denmark 1974).

The area experiences about 40 thunderstorms annually (NOAA 1980). Occasionally, these storms are accompanied by hail, damaging winds, and/or tornadoes. From 1957 to 1969 there were 371 tornadoes in the state with more than 65% occurring during the spring months (NOAA 1970). The theoretical probability of a 67-m/s (150 mph) tornado strike at Argonne is 3.0×10^{-5} each year, a recurrence interval of one tornado every 33,000 years (Coats and Murray 1984). The Argonne site has been struck by milder tornadoes, with minor damage to power lines, roofs, and trees.

Although a few minor earthquakes have occurred in northern Illinois, none has been positively associated with a particular tectonic feature. Most of the recent local seismic activity is believed to be caused by isostatic adjustments of the earth's crust in response to glacial loading and unloading, rather than by motion along crustal plate boundaries.

There are several areas of considerable seismic activity at moderate distances (hundreds of kilometers) from Argonne (Hadley and Devine 1974). These areas include the New Madrid Fault zone (southeastern Missouri), the St. Louis area, the Wabash Valley Fault zone along the southern Illinois-Indiana border, and the Anna region of western Ohio. Although high-intensity earthquakes have occurred along the New Madrid Fault zone, their relationship to plate motions remains speculative at this time.

According to estimates by Algermissen et al. (Algermissen et al. 1982), ground motions induced by near and distant seismic sources in northern Illinois are expected to be minimal. However, peak accelerations in the Argonne area may exceed 10% of gravity (approximate threshold of major damage) once in about 600 years, with an error range of -250 to +450 years.

The probability of an environmental event has been determined to be low, but the consequence of this event is medium. Therefore, the risk is low.

5.0 SAFETY ENVELOPE

The safety envelope is a set of physical and administrative conditions that define the bounding conditions for safe operations at an accelerator facility. The hazard analysis in this SAD is based on operation of the accelerator systems within the safety envelope. The beamline safety envelope presented in section 5.1.5 of this document does not replace but supplements the accelerator safety envelope. The beamline hazard analysis is based on operation of the beamlines within the complete, all-inclusive, safety envelope. Variations in operating conditions are permitted as long as consequences of the variations do not exceed the bounds imposed by the safety envelope. These variations of the operating conditions include unplanned events, such as power outages, which may interrupt operations but do not compromise the safety of the facility. As required by DOE Directive O 420.C Attachment 1 (DOE 2011a), any activities would could result in a variation beyond the boundaries of the safety envelope must receive prior DOE approval. In addition if an activity being perfromed is found to be creating a variation beyond the safety envelope, that activity must be terminated immediately and the accelerator placed into a safe and stable condition.

The requirements specified in the safety envelope are binding for operation of the APS accelerator systems and beamlines. Significant revisions of these requirements resulting from changes in operating conditions or any facility/equipment modifications that involve an unreviewed safety issue will require a revision or supplement to this SAD.

Requirements in the APS safety envelope related to technical matters address those accelerator system and beamline features designed and built into the APS system to maintain safe and environmentally sound operations. Requirements in the safety envelope related to administrative matters include the establishment of administrative policies and procedures to ensure safe operating conditions. The safety envelope described in this chapter addresses both the technical and administrative requirements.

Administrative conditions included in the safety envelope are necessary to assure operation within the physical conditions included in the safety envelope.

5.1 Safety Envelope - Technical Requirements

The quantity and energy of particles to be accelerated in the injector or stored in the storage ring comprise the starting point of the radiation hazard analysis and, as such, should be constrained by the safety envelope. The most meaningful constraint on the capacity of the accelerators to produce radiation is the total energy of the accelerated or stored beam. To some extent the efficacy of the shielding depends on the kinetic energy of the incident beam. Generally the worst case corresponds to the highest possible kinetic energy, e.g., 7.7 GeV in the synchrotron and storage ring. For this reason, radiation dose and shielding computations have been carried out assuming

kinetic energy at or near the maximum which can be produced by the accelerator in question. Should the accelerator be operated at fixed power and lower kinetic energy, the radiation hazard is unchanged or else somewhat reduced.

For this reason, the technical requirement for the APS accelerator safety envelope are stated as limits on:

1) The product of beam kinetic energy in GeV and average beam current in nanoamperes delivered by an accelerator in the injector; this is the power, expressed in watts available for production of radiation in the event that all the beam produced by the accelerator is lost.

or

2) The product of the beam kinetic energy in GeV and the total charge in the beam in nanocoulombs; this is the energy, expressed in joules, available for production of radiation in the event that all the beam circulating in the storage ring is lost.

The maximum beam current or charge allowed by the safety envelope is a function of the beam kinetic energy. It may be determined by dividing the total power (or energy) by the beam kinetic energy.

The technical requirements for the safety envelope of the linac, LEA, PAR, synchrotron and storage ring are listed in. This table also lists the operating envelope and the design performance goal for each accelerator, including goals and limits for the beam kinetic energies.

Average beam powers have been specified to define the safety envelopes of the linac, LEA, PAR, injector synchrotron, and storage ring in injection mode. These currents and powers should not be interpreted as peak values; which are much higher due to the fact that the particle beams consist of current pulses (or “bunches”) with durations less than 30 nanoseconds. However, a worker in a radiation area will receive a dose which is the integral or cumulative dose over seconds or perhaps hours during which the worker is exposed. Thus, it is appropriate to define safety envelope quantities as average currents and powers which would lead to correct estimates of the cumulative radiation dose over periods of seconds or hours. The shortest averaging period for these quantities would therefore be 0.5 s, the nominal repetition rate of the injector. However, maximum credible incident estimates are based on the assumption that the incident continues for one hour, while occupational doses under routine conditions are estimated as cumulative doses over a 2,000-hour work year.

Therefore, in order to more accurately reflect the relevant time scales in estimating exposures, we define the safety envelope currents and powers for injection listed in Table 5.1 as averaged over one hour.

Table 5.1 Summary of Accelerator Systems Safety and Operating Envelopes

	Safety Envelope	**Operating Envelope**	**Design Performance Goal**
Linac			
Max. Beam Power	1000 W	825/10.8 W	480/5.4 W
Max. Beam Energy	--	700/450 MeV	200/450 MeV
Charge per Cycle	--	24/0.5 nC	50/0.25 nC
Repetition Rate	--	48 pps	48 pps
LEA			
Max. Beam Power	1000 W	825 W	250 W
Max. Beam Energy	--	700 MeV	500 MeV
Charge per Cycle	--	24 nC	50 nC
Repetition Rate	--	≤ 60 pps	10 Hz
PAR/LET			
Max. Beam Power	20 W	15 W	5.4 W
Max. Beam Energy	--	0.50 GeV	0.45 GeV
Charge per Cycle	--	10 nC	6 nC
Repetition Rate	--	2 Hz	2 Hz
Synchrotron/HET			
Max. Beam Power	308 W	154 W	84 W
Max. Beam Energy	--	7.7 GeV	7.0 GeV
Charge per Cycle	--	10 nC	6 nC
Repetition Rate	--	2 Hz	2 Hz
Storage Ring Injection (with beamline safety shutters closed)			
Max. Beam Power	308 W	154 W	84 W
Max. Beam Energy	--	7.7 GeV	7.0 GeV
Charge per Cycle	--	10 nC	6 nC
Repetition Rate	--	2 Hz	2 Hz
Storage Ring Top-Up Injection			
Maximum Beam Power	308 W	154 W	0.17 W
Minimum Beam Energy	6 GeV	6.5 GeV	7.0 GeV
Maximum Beam Energy	7.7 GeV	7.7 GeV	7.0 GeV
Charge per Cycle	--	10 nC	3 nC
Repetition Rate	--	2 Hz	0.0083 Hz
Minimum Stored Current	1 mA	3 mA	3 mA
Storage Ring (stored beam)			
Max. Stored Energy	9280 J	7728 J	2576 J
Max. Beam Energy	--	7.7 GeV	7.0 GeV

For the purposes of estimating occupational doses under routine conditions, it is assumed that the beam power averaged over a six-month period for each accelerator of the injector (linac, PAR, and synchrotron) will be 10% of the powers listed in . The assumption of 10% power duty factor should not be interpreted as a part of the safety envelope. Nonetheless, a cumulative record of the accelerated beam will be kept by the Operations Group. This record will be supplemented by an automatic computation carried out by the control computer system.

For the storage ring in stored beam mode, the situation is considerably simplified. The cumulative dose is defined by the loss of the entire stored beam. Therefore, it is appropriate to define the safety envelope for the storage ring in stored beam mode in terms of the total stored energy in the beam, measured in joules, equal to the product of the beam energy in GeV and the total stored charge in nC.

5.1.1 Linac and LEA

Radiation shielding of the electron linac is designed to protect personnel in the linac klystron gallery, which is parallel to the linac. The concrete shielding is 2 m thick throughout and has 40-cm-thick (16-in) steel plates embedded in it near the buncher between the upstream and downstream linacs.

The upstream electron linac design performance goal is based upon 48 pps continuous operation at 50 nC of charge per pulse at 200 MeV. This results in a beam power (energy times current) of 480 W. The shielding is adequate to handle a 1-kW electron beam. The safety envelope of the two electron linacs is defined as 1 kW of beam power interacting at a beamstop at the end of the downstream linac The calculated dose equivalent in the klystron gallery, for 1 kW operation, is as shown in Figure 5.1, and the maximum dose equivalent is ~5 µSv/h (0.5 mrem/h).

The rationale for defining the safety envelope in terms of the beam power is that in the APS linac energy range, production yields of secondary radiation, including electrons, positrons, neutrons, and gamma rays, are proportional to the beam power. Therefore, specifying the power level rather than the beam energy and current separately allows some flexibility in the operating beam energy and current.

The shielding around the downstream linac is also 2-m-thick concrete. Calculations show that this shielding is adequate for 1 kW operations and the calculated maximum dose equivalent rate is 5 µSv/h (0.5 mrem/h). This beam will be transported to the PAR. Calculations indicate that a 1-kW beam of electrons striking accelerator components would produce an average dose rate of about 2.5 µSv/h (0.25 mrem/h) at the highest dose point.

Figure 5.1 Maximum Radiation Dose in the Klystron Gallery under Nominal Operating Conditions and at the Safety Envelope

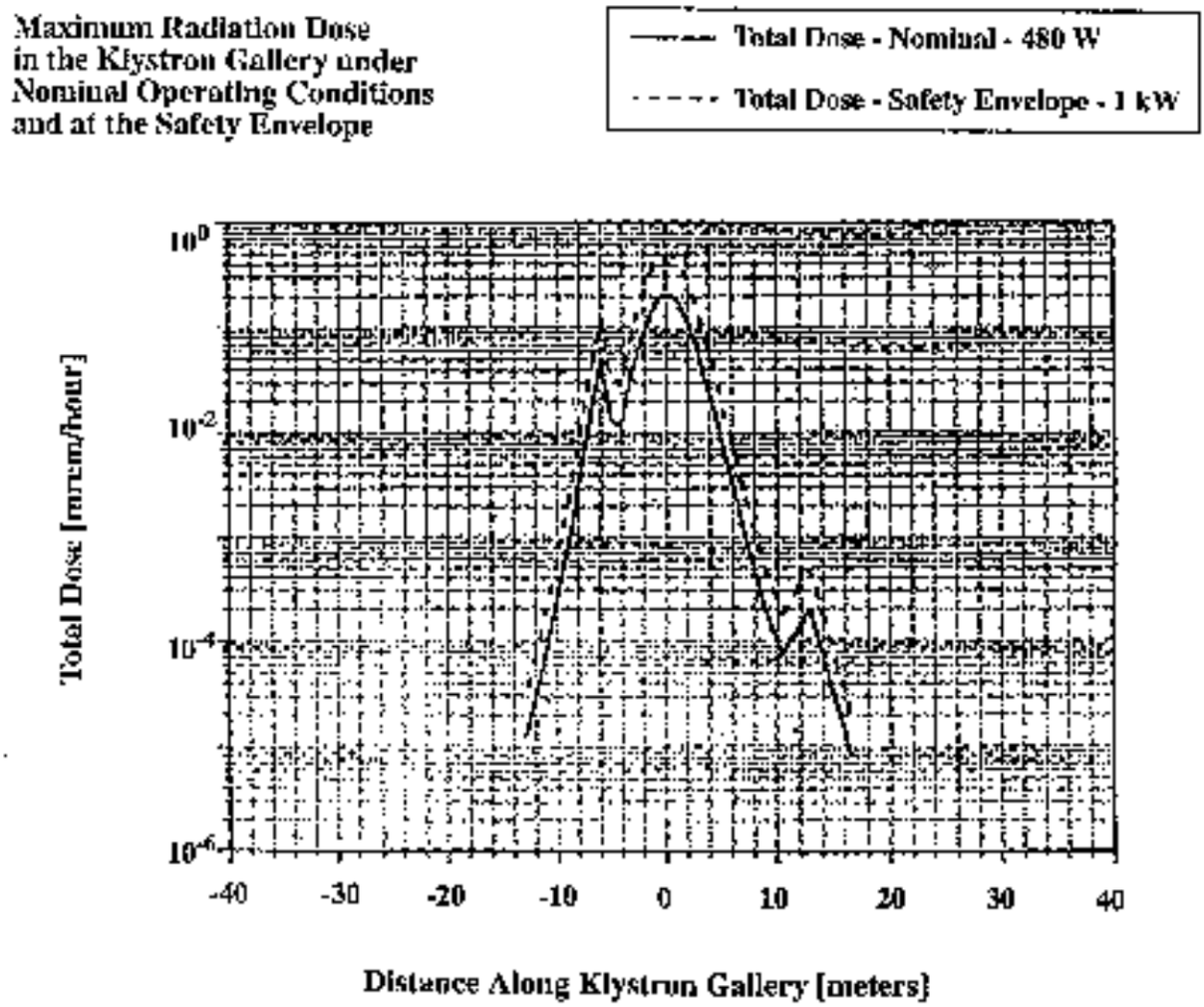

When operated together the upstream and downstream linac systems can accelerate electrons to 700 MeV.

The LEA is an extension of the linac. The additional beamlines beyond the linac, the PAR bypass, the booster bypass, and the undulator test line are all designed to handle a beam energy of up to 700 MeV. The linac vault shield wall is 2 m thick throughout, whereas the booster synchrotron walls along the region of the booster bypass are only 1.5 m thick. This wall has been supplemented in the region of the shielded intermediate beam dump to 2 m equivalent thickness of concrete. Calculations indicate that for operation at the linac safety envelope (700 -MeV, 1-kW beam of electrons) a continuous strike at the intermediate beam dump produces an average dose rate of 51.7 µSv/h (5.17 mrem/h) produced at the highest point outside of the radiation environment.

Following is a summary of the safety envelope for the APS linac, expressed in terms of the linac beam power:

Electron Operation: Beam Power = 1.0 kW

5.1.2 Particle Accumulator Ring, Low Energy Transport

As in the case of the linac, the amount of radiation produced by beam losses in the PAR is proportional to the beam power, which is the product of the beam energy and the beam current. Hence, it is reasonable to define the safety envelope in terms of the maximum allowed beam power, since this permits flexibility of operations with no compromise in safety.

While the design performance goal for the PAR and LET calls for a 450-MeV electron beam with an average current from the linac of 12 nA, the linac has the potential to create a 500-MeV electron beam with significantly higher current. This must be taken into account in evaluating the safety envelope for the PAR and LET.

The PAR safety envelope is 20 W of electrons. Maximum PAR energy is 500 MeV.

The radiation shielding for the PAR enclosure has been designed for this level of beam power in order to bring radiation levels outside the enclosure within acceptable limits. The concrete enclosure surrounding the PAR and LET has a minimum wall thickness of 1.3 m and a roof thickness of 1 m. Localized lead shielding is used to augment the shielding effect of the enclosure.

5.1.3 Injector Synchrotron, High Energy Transport

5.1.3.1 Modes of Operation

For both the synchrotron and HET line the safety envelope can be specified by defining the following machine and beam characteristics:

- Maximum
  - Beam energy
  - Current
  - Charge lost/sec

It is always possible to assume that the safety envelope can be approached at any time during the course of operation; it is thus specified and applicable to any envisioned mode of operation. The quantity of electrons used in the synchrotron will be limited administratively to 10 nC per pulse.

5.1.3.2 Limitations to Operations

The injector synchrotron was designed to accelerate electrons up to a maximum energy of 7.7 GeV. Magnet power supply and rf cavity window limitations prevent operation at energies higher than this level. Again, due to power supply limitations, this energy level is only achievable in a maximum 2-Hz pulsed mode ramp cycle. Furthermore, the dipole power supplies limit DC operation to 4.68 GeV.

During top-up operation the injector synchrotron will deliver beam to the storage ring at a rate appropriate to reduce variation in the stored beam current to less than one part per thousand. A longer-term goal is to maintain the stored beam current to a precision of 100 parts per million. The required injection rate is determined by the current stability criterion and the lifetime of the stored beam. For example, one part per thousand for a stored current of 100 mA corresponds to a a variation in charge of 0.368 nC in the storage ring. If the beam lifetime is 10 hours, this quantity of charge will be lost to gas scattering or intrabeam scattering in

(0.368 nC/368 nC = 0.001) × 10 hours × 3600 seconds/hour = 36 seconds.

This loss in stored beam must be compensated by the injector; 0.368 nC must be added to the storage ring during a 36-second interval. To do this, the injector will accelerate several pulses of beam, each with about 1 nC of charge, during the 36-second interval. One (or more, optionally) of these pulses will be transported to the storage ring, passing through scrapers in the booster-to-storage ring transfer line, so as to reduce the total injected charge to the required amount. Any additional pulses accelerated in the booster will be dumped within the booster enclosure.

The synchrotron does not generate particles; it only accelerates them. The maximum quantity of charge accelerated is thus limited to what the upstream injector chain can provide per second at the limit of its safety envelope. This value is limited by interlock to 20 nC per cycle or 40 nA (2-Hz repetition rate). Assuming 100% transmission efficiency through the LTP line, the PAR, the PTB line, and the full energy ramp cycle of the injector synchrotron, all 20 nC can be accelerated to the full 7.7 GeV each cycle.

5.1.3.3 Losses

For purposes of the safety envelope, losses will be assumed to occur at 7.7 GeV, 20 nC per cycle, and at a rate of 2 Hz. These quantities imply a beam power of 308 W as the safety envelope.

Under normal operations, attempts will be made to confine losses to well-defined areas. Supplemental shielding will be provided around these locations. Known locations are:

- Downstream of the horizontal scraper in quadrant 1 of the synchrotron.
- In the area of the synchrotron extraction or storage ring injection septum magnets.
- At the beam dump in the branch of the HET line.

It is conceivable that beam can be lost at any point in the machine and at any time in the acceleration cycle. This loss can be spread out over a large region or confined to a localized area which, in the case of the synchrotron, can be defined as anything less than a region approximately 2 m in length. However, peak losses of this sort, 308 W continuous at an unknown point, would be detected by various systems and diagnostics in the control system. Until the location and cause of this sort of loss was found, either or both the total amount of charge being accelerated and the repetition rate would be reduced.

5.1.3.4 Safety Envelope

The hazard analyses for the injector synchrotron are based on a maximum beam energy of 7.7 GeV and a maximum of 20 nC of electrons accelerated per 0.5-s cycle. These values imply a maximum beam power of 308 W.

5.1.4 Storage Ring

5.1.4.1 Modes of Operation

There are three distinct modes of operation of the storage ring, as indicated in . In the injection and top-up injection modes, the safety envelope is identical to that of the injector synchrotron, in terms of delivered beam power. This is because all of charge lost in the storage ring must come from the booster.

In stored beam mode, the cumulative dose is limited by the total stored energy of the beam in joules. This quantity is equal to the product of beam energy in GeV and stored beam charge in nC. The stored charge is equal to the stored beam current multiplied by the storage ring revolution period, 3.68 microseconds.

5.1.4.2 Limitations to Operations

The maximum possible energy of the beam in the storage ring is 7.7 GeV, due to magnet power supply limitations. The beam current in the storage ring is limited by the ability of vacuum system components to withstand heating from synchrotron radiation. These components are designed to operate at 7.0 GeV with 300 mA of stored beam current. At higher energies, the allowed beam current is lower.

Top-up operation of the storage ring will be allowed if and only if

- The storage ring is operated at an energy higher than 6.0 GeV.
- A beam current greater than 1 mA is present in the storage ring.

Both conditions will be enforced by interlocks connected to the accelerator radiation protection system (the ACIS described in section).

These conditions are sufficient to guarantee that injected beam cannot exit the storage ring enclosure through an x-ray beamline exit port.

Transport of an injected beam out an x-ray beamline exit port can only take place if one of the 80 storage ring dipole magnets malfunctions in such a way as to have zero field or reduced field compared to the rest of the dipoles in the ring. After exhaustive study it has been determined that the conditions necessary for such an event absolutely preclude the presence of beam circulating in the storage ring at an energy higher than 6 GeV. Therefore, if a beam is present in the storage ring, top-up operation creates no radiation hazard greater than would be possible during traditional modes of operation (injection with x-ray beamline safety shutters closed or no injection with safety shutters open).

5.1.4.3 Losses

Radiation shielding of the storage ring is designed to protect personnel in the Experiment Assembly Area (EAA) and in the experiment hall on the outboard side of the tunnel, as well as the tunnel roof. Shielding consists of either normal concrete or high- density concrete. It is expected that modifications of the supplemental shielding may be required for operation at the safety envelope, defined below. Under normal conditions, losses will be confined to well-defined locations. Supplemental shielding will be placed in these areas. Probable locations of injected beam loss are as follows:

At the injection septum, located in the Sector 39 straight section.

- At the upstream ends of the first three small gap insertion device vacuum chambers downstream of the injection point.
- In the high-dispersion straight sections of the first two sectors downstream of the injection point.
- At aperture defining scrapers in the high energy transport line and storage ring.

While injected beam losses can occur at many places around the storage ring during accidental beam missteering conditions, steps have been taken to minimize this eventuality. Losses are detected by the beam diagnostic systems in several ways, and transmitted to the control system. Engineered safety systems (section) incorporate radiation monitors as part of their input.

Stored beam losses will occur during beam missteering conditions, but can also result from fast beam instabilities or rf system malfunction. Missteering and instabilities will most likely result in beam losses at aperture restrictions such as scrapers placed around the ring for this purpose, or at small gap insertion device vacuum chambers. If the rf system were to trip off, the beam would spiral inwards, finally striking the vacuum chamber in a high-dispersion straight section. Horizontal aperture limiting scrapers are located in these regions to localize this type of loss.

5.1.4.4 Safety Envelope

Hazard analysis for the storage ring during injection is based on a maximum beam energy of 7.7 GeV and a maximum of 20 nC of electrons accelerated per 0.5-s cycle. With safety shutters closed, it is assumed that the injected beam may be lost anywhere; arbitrary magnet malfunctions are assumed possible. Injection MUST begin with the appropriate x-ray beamline safety shutters closed, when no stored beam is present.

Once stored beam of minimum energy 6 GeV and minimum current 1 mA is established, safety shutters may be opened and top-up injection may begin.

In stored beam mode, the safety envelope is equal to 9280 J of stored energy, corresponding to 327 mA of stored beam at an energy of 7.7 GeV. Equivalently, a beam current of 360 mA at an energy of 7.0 GeV yields the same stored energy in joules.

The safety envelope for the x-ray diagnostics beamlines comprises the following:

- If the conditions for top-up injection are satisfied, the second photon shutter and the safety shutters may be open during injection of beam into the storage ring.
- If conditions for top-up injection are not satisfied, the second photon shutter and safety shutters must be closed during injection.
- The VUV and x-radiation are contained within shielded pipes and interlocked shielded enclosures.

5.1.5 Beamline Safety Envelope

The beamline safety envelope is specified to ensure that the APS design and shielding policy goals for ionizing-radiation exposure limits are not exceeded. The envelope also includes the review process, which ensures that <u>all</u> potential hazards are identified, analyzed, reviewed, and adequately mitigated. To that end, the safety envelope is defined as follows:

- All x-ray photon beams are contained within adequately shielded beam transports and enclosures.

- All beamline enclosures that require frequent, controlled personnel access are protected by the APS designed, installed, and maintained Personnel Safety System (PSS).
- All bremsstrahlung shielding and exclusion zones are in place whenever the beamline is operating.
- If conditions for top-up injection are satisfied, the front-end safety shutters may be open during injection of beam into the storage ring.
- If conditions for top-up injection are not satisfied, the front-end safety shutters must be closed while beam is injected into the storage ring.
- The APS maintains a review process that ensures: that all beamlines are reviewed to identify all potential beamline hazards; and ensures that the Beamline Management properly mitigates the hazards and operates within the other safety envelope requirements.

5.2 Safety Envelope - Administrative Requirement

The administrative safety envelope for the accelerator systems requires the existence and adherence to written radiation survey procedures to ensure that radiation levels are acceptable for operation within the technical safety envelope described in this chapter.

Functionality and testing of the ACIS are an administrative requirement of the safety envelope. Requirements for configuration control and verification/testing are described in an earlier section of this document.

The safety envelope includes physical and management constraints to assure that all required supplemental shielding is in place. These constraints will include mechanical means of securing the shielding configuration, written procedures for removal/replacement and modification of shielding, and procedures for verification by inspection that the required shielding is in place.

The safety envelope for top-up operation requires that certain apertures limiting the excursion of the stored and injected beam in the storage ring be in place to sufficient accuracy. The identities, locations, and tolerances on these apertures, and the methodology for determining their positions, are documented in an AES procedure.

The safety of top-up injection was verified by a determination of the particle trajectories in the storage ring under an exhaustive range of normal and abnormal conditions. Should any change be made in the storage ring particle optics, or should the location or dimensions of critical apertures be modified, the tests of the safety of top-up operation will be repeated for the new magnet settings and apertures. The test procedure for particle trajectories is documented in an ASD procedure.

6.0 FACILITY OPERATIONS

6.1 Introduction

This safety assessment document is an analysis of safety features built into the accelerator systems, and does not address how to conduct operations. Accelerator operation requires a high degree of flexibility for the effective execution of unique and complex research and development programs, and at the same time these activities must be conducted in a safe and environmentally sound manner. The Advanced Photon Source Conduct of Operations Manual follows DOE Order 5480.19, Conduct of Operations Requirements for DOE Facilities (DOE 2001c). The manual implements the eighteen chapters of DOE Order 5480.19 in sequence and supplements the requirements of the Order with Argonne National Laboratory procedures. As required by the Order, within the APS organization a graded approach is to be followed in determining which of the chapters or elements of chapters are applicable to any activity or unit. This means that the elements of the chapters are applied to each activity at a level of detail that is commensurate with the operational importance of the activity and its potential environmental, safety, and/or health impact.

6.2 Conduct of Operations Manual

The APS Conduct of Operations Manual (ANL 2001) is periodically updated to reflect changes and updates to APS operations, and the APS Document Control Center is the custodian of the Manual. The purpose of each chapter of the manual is described below.

Chapter 1 OPERATIONS ORGANIZATION AND ADMINISTRATION

This chapter establishes the responsibilities, APS administrative guidelines, and requirements necessary for daily conduct of facility operations.

Chapter 2 SHIFT ROUTINES AND OPERATING PRACTICES

This chapter provides standards for professional conduct which should be established and followed by operations personnel so that their performance meets the expectations of DOE and APS management.

Chapter 3 CONTROL AREA ACTIVITIES

The purpose of this chapter is to define the policy for control area activities. Control area activities should be conducted in a manner that achieves safe and reliable facility operations.

Chapter 4 COMMUNICATIONS

The purpose of this chapter is to establish methodology for highly effective, reliable, and accurate transmission of information.

Chapter 5 CONTROL OF ON-SHIFT TRAINING

This chapter establishes guidelines for conducting an on-shift training program.

Chapter 6 INVESTIGATION OF ABNORMAL EVENTS

This chapter defines the program that APS has developed to ensure that abnormal events with serious or potentially serious impact are promptly investigated and that an appropriate response is made to significant findings.

Chapter 7 NOTIFICATIONS

This chapter describes the requirements, responsibilities and procedures for timely notification of Argonne and DOE of events, conditions, or concerns that have safety, health, quality assurance, security, or environmental impacts under DOE Order 5000.3B, "Occurrence Reporting and Processing of Operations Information" (DOE 1993a) and DOE Order 5500.2A, "Emergency Notification, Reporting and Response Levels" (DOE 1988a).

Chapter 8 CONTROL OF EQUIPMENT AND SYSTEM STATUS

This chapter provides direction for control of equipment and system status to ensure that facility configuration is maintained in accordance with procedural requirements.

Chapter 9 LOCKOUTS AND TAGOUTS

The purpose of this chapter is to define the lockout and tagout practices required for the control of hazardous energy sources at the APS.

Chapter 10 INDEPENDENT VERIFICATION

This chapter identifies a system for independent verification of the accomplishment of procedures that are considered critical to the safety of operation or maintenance of APS processes, systems, or facilities.

Chapter 11 LOGKEEPING

This chapter provides direction for establishing and maintaining operating logs in order to fully record the data necessary to provide an accurate history of facility operations.

Chapter 12 OPERATIONS TURNOVER

This chapter establishes the instructions to be followed during shift turnover to ensure that all operators receive the information required to adequately carry out their shift responsibilities.

Chapter 13 OPERATIONS ASPECTS OF FACILITY CHEMISTRY AND UNIQUE PROCESSES

This chapter implements the important aspects of operations involving chemistry and unique processes.

Chapter 14 REQUIRED READING

The purpose of this chapter is to provide requirements and instructions for a formal system which ensures that each individual receives all information necessary for job performance.

Chapter 15 TIMELY ORDERS TO OPERATORS

The purpose of this chapter is to provide a means for APS management to disseminate essential short-term information and administrative instructions to appropriate personnel.

Chapter 16 OPERATIONS PROCEDURES

Operations procedures are written to provide specific direction for operating systems and equipment during normal and postulated abnormal and emergency conditions. This chapter provides instructions regarding creation, modification, and approval of operating procedures.

Chapter 17 OPERATOR AID POSTINGS

The purpose of this chapter is to provide instructions to facility personnel for requesting, reviewing, approving, and posting operator aids.

Chapter 18 EQUIPMENT, CABLING AND PIPING LABELING

This chapter provides a method to implement a standard facility equipment, cabling, and piping labeling program.

7.0 QUALITY ASSURANCE

7.1 Program Description

UChicago Argonne, LLC, is the prime management and operating contractor for the U.S. Department of Energy (DOE) at Argonne National Laboratory under Contract No. DE-AC02-06CH11357, and is committed to implementing plans, processes, and procedures that institutionalize the DOE Quality Management System (QMS) requirements defined in DOE Order 414.1D, *Quality Assurance* (DOE 2011b). This order requires that appropriate consensus standards be used, whole or in part, for activities undertaken on behalf of DOE, consistent with regulatory requirements and Secretarial Officer direction. Currently acceptable standards applicable to APS include ANSI/ISO/ASQ Q9001-2008, *Quality Management Systems Requirement Standard* (ANSI 2008) and ANSI/ASQ Z 1.13-1999, *Quality Systems Guide for Research* (ANSI 1999).

Argonne National Laboratory is committed to developing, implementing, and maintaining a formal quality management system. This is achieved through the Argonne National Laboratory Quality Assurance Program Plan (QAPP) (ANL 2010). This plan describes the integration of quality functions into all aspects of Argonne activities and is mandatory for all Argonne organizations. It follows the Contractor Requirements Document in DOD O 414.1D, including suspect/counterfeit item prevention and safety software quality assurance, using a graded approach. The Argonne Laboratory Management System is certified to ANSI/ISO/ASQ Q9001-2008.

Quality assurance refers to those actions that provide confidence that the items, services, or processes provided meet or exceed requirements and expectations. The Argonne National Laboratory QAPP defines the management controls by which its quality assurance (QA) program will meet DOE O 414.1D, *Quality Assurance*, and DOE P 450.4A, *Integrated Safety Management Policy* (DOE 2011c). This plan sets forth the methods, controls, and processes and defines the responsibilities and lines of communication for assuring that the desired quality is achieved at the APS.

Specific requirements of the QAPP are to be applied to all tasks at the APS using a graded approach. The stringency with which the requirement of the QAPP is applied will be commensurate with the risk of occurrence of undesirable outcomes with respect to health and safety, the environment, property, and resources, as well as the APS vision and goals. APS Management ensures that necessary and appropriate resources and capabilities are provided to maintain compliance with the requirements of this document.

Quality achievement is a continuing responsibility of line organization at all levels of operations. Each individual, including subcontractors, is responsible for achieving

quality in his or her own work. Exceptions for quality assurance specified by sponsors are incorporated into the research program documentation. In such cases, the research program documentation will reference this QAPP and specifically not any exception being made to the requirements.

7.2 Design Reviews

7.2.1 Design Verification and Validation

Adequacy of design output is verified prior to release for use by other organization or to support processes such as procurement, manufacture, construction, equipment operations, or experimentation. Modifications are fed back to the designer in an iterative process until the design is acceptable. These evaluations are performed by qualified individuals or groups other than those who performed the work and individuals or groups knowledgeable in the application of the design and capable of performing similar design activities.

A graded approach is used for design verifications based on design complexity and importance to safety. Design validation is accomplished using one or more of the following methods: design review, alternate calculations, qualification testing, interface requirements, fire protection, safety, quality, redundancy requirements, and reliability requirements.

Design controls processes ensure that design input requirements are correctly translated into drawings and specification. Design input/output alignment is an integral part of the design verification process performed during various phases of the design to ensure that the applicable requirements are properly incorporated.

7.3 Safety Reviews

During the design and development of the engineered technical components and the conventional facilities, due consideration is given to safety requirements and compliance with applicable codes and standards. Assurance of safety compliance of standard “off the shelf” items is requested of the vendor. A safety review of specialty items is required if specific safety design criteria are not included in the product design specifications

7.4 Testing Procedures

Each APS division director, or their designee, is responsible for assuring inspections and testing of items are conducted prior to their energization to ensure compliance with the design requirements and applicable codes and standards. Inspections and tests are performed by persons with appropriate training and experience to perform the particular inspection or test, as determined by the division director or his designee. Inspections and tests of items are performed in accordance with written

procedures, instructions, or checklists and the results recorded as specified in these documents. The requirements for review, approval, issuance, and revision of documents which specify inspections and tests are included in the APS quality assurance plan and implementation procedures.

7.5 Computer Software

Software quality assurance (SQA) programs are required contractually by DOE O 414.1D (DOE 2011b) and DOE G 414.1-4, *Safety Software Guide for Use with 10 CFR 830, Subpart A, Quality Assurance Requirements, and DOE O 414.1C, Quality Assurance* (DOE 2005b). Requirements are implemented to ensure that software will perform its intended specific function in relation to Argonne structures, systems, components, data, and activities. Software controls are required to be developed and implemented using national and international consensus standards and based on a graded approach to ensure that those controls are applied commensurate with the software application.

The SQA requirements apply to all DOE software or software customized for DOE use, proposed for use, under development, or being maintained and used, whether that software was developed in house, licensed from a commercial vendor for customized use, obtained from another organization, or otherwise acquired. The type of software includes, but is not limited to, administrative/business-oriented software, scientific/engineering software, manufacturing oriented software, and process control software.

Software designated as “safety software” requires additional specific controls. DOE O 414.1D and DOE G 414.1-4 detail the requirements for safety software quality assurance. The determination of what constitutes safety software and their appropriate quality level is made by the division applying the software.

8.0 ENVIRONMENTAL MONITORING PROGRAM

8.1 Program Description

The environmental surveillance program at Argonne consists of regular monitoring for radiation, radioactive materials, and nonradiological constituents. The surveillance program supports the Argonne policy to protect the public, employees, and the environment from harm that could be caused by Argonne activities and to reduce environmental impacts to the greatest degree practicable.

The APS is included in the Argonne environmental program, which meets the requirements of the U.S. EPA and the Illinois EPA, as well as numerous DOE Orders and Executive Orders. To insure compliance with both the letter and spirit of these regulations, Argonne has made a commitment to comply with all applicable environmental regulations as described in the following policy statement:

"It is the policy of Argonne National Laboratory that its activities will be conducted in such a manner that worker and public safety, including protection of the environment, is given the highest priority. The Laboratory will comply with all applicable federal and state environmental laws, regulations and orders."

Details of sample location points, frequency of sample collection, and laboratory analysis are found in the Argonne Site Environmental Report (Golchert et al. 2003).

8.1.1 Compliance Summary

Radionuclide emissions from all Argonne facilities, including the APS, are regulated under the Clean Air Act and are monitored to assure compliance with the act.

8.1.2 Environmental Surveillance Program

Ambient air in the Argonne area is monitored for total alpha activity, total beta activity, strontium-90, isotopic thorium, isotopic uranium, and plutonium-239. The CAP-88 version of the EPA/AIRDOSE-RADRISK code is used to evaluate airborne emissions of gaseous radioactive materials from the APS and to estimate the effective dose equivalents delivered at the site perimeter and to the maximally exposed members of the public.

Sediment samples are collected from Sawmill Creek above, at, and below the point of wastewater discharge. Argonne also conducts surface water sampling to demonstrate compliance with the Argonne NPDES permit.

The potential radiation doses to members of the public from all Argonne operations, including the APS, are estimated by combining the exposure from all inhalation, ingestion, and direct radiation pathways. The magnitudes of the doses from all

Argonne operations will be well within all applicable standards and are insignificant when com- pared to doses received by the public from natural radiation (~3 mSv/yr [300 mrem/ yr]) or other sources, e.g., medical x-rays and consumer products (~0.6 mSv/yr [60 mrem/yr]).

An extensive quality assurance program is maintained to cover all aspects of the environmental surveillance sampling and analysis programs. Approved documents are in place along with the supporting standard operating procedures. Samples at all locations are collected using well-established and documented procedures to ensure consistency. Samples are analyzed by documented standard analytical procedures. Data quality is verified by a continuing program of analytical laboratory quality control, participation in inter-laboratory cross-checks, and replicate sampling and analysis. Data are managed and tracked by a dedicated computerized data management system.

8.2 Monitoring of Radiological and Hazardous Materials in Potential Exposure Pathways

The Environmental Radiological and Hazardous Materials Monitoring Program Description ~~as~~ formerly required by DOE Order 5400.1 (DOE 1988b), has been superseded by DOE O 450.1 Environmental Protection Program (DOE 2003). Argonne conducts a routine environmental monitoring program, which includes the APS. This program is designed to determine how the operation of Argonne affects the environment surrounding the site.

8.2.1 Air Sampling

Continuously operating air samplers are used at Argonne to measure the concentrations of airborne particulate radioactivity. There is currently no monitoring of nonradiological air contaminants in ambient air. Particulate samplers are placed at 15 locations around the Argonne perimeter and at six off-site locations, approximately five miles from Argonne, to determine the ambient or background concentrations.

The release of nonradiological pollutants to the air from Argonne, including the APS, is extremely small except for the boiler house, which is equipped with dedicated monitoring equipment. As a result, the ambient air is not routinely monitored. To determine the amount of airborne emissions of radioactive material, systematic grab sampling of the exhaust air from the accelerator tunnel is done on a routine basis. The CAP88 version of the EPA/AIRDOSE-RADRISK code is used to evaluated this information.

8.2.2 Water Sampling

Water samples are collected to determine what, if any, radioactive materials or selected hazardous chemicals used or generated by all of the operations at Argonne enter the environment by the water pathway. The samples are collected from

Sawmill Creek below the point at which Argonne discharges its treated wastewater and stormwater.

In addition to surface water, subsurface water samples are also collected at approximately 38 locations. These samples are collected from monitoring wells located near sites that have the potential for adversely impacting groundwater. Samples of the former source of domestic water, which comes from three on-site wells, are also collected and analyzed for SDWA-mandated constituents.

Surface water samples are collected from Sawmill Creek daily and combined into a single weekly composite sample. A continuous sampling device is installed at this location to improve sample collection efficiency. To provide control samples, Sawmill Creek is sampled upstream of Argonne once a month. The DesPlaines River is sampled twice a month below and once a month above the mouth of Sawmill Creek to determine if the radioactivity in the creek has any effect on the activity in the river.

The nonradiological monitoring program involves the collection and analysis of surface water and groundwater samples from numerous locations through the site.

Measurements of radiation levels of the APS septum magnets indicate levels well below those estimated through initial model calculations. Analysis of the filter medium in the accelerator water-cooling system shows no increased radioactivity in the filters. This implies that the cooling system water is not being activated. Although no soil samples or borings have been made under the linac, the fact that the water in direct contact with the accelerator systems is not being activated would support the conclusion that there is no soil activation as the result of accelerator operations.

8.2.3 Bottom Sediment Sampling

Bottom sediment accumulates small amounts of radioactive materials which may be present from time to time in the stream and, as a result, acts as an integrator of radioactive material that was present in the water. It provides a historical record of radioactive materials in that surface water system. These samples are not routinely analyzed for chemical constituents.

Bottom sediment samples are collected annually from Sawmill Creek above, at, and at several locations below the point at which Argonne discharges its treated wastewater. A portion is taken for gamma-ray spectrometric measurement and other appropriate aliquots are used for specific radiochemical analysis.

8.2.4 External Penetrating Radiation

Measurements of direct penetrating radiation emanating from several sources within Argonne, including the APS, are made using thermoluminescent dosimeter (TLD)

chips. The response of the chips is determined with a U.S. National Institute of Standards and Technology (NIST) standard radium-226 source.

Dosimeters are exposed at approximately 17 locations at the site perimeter, on the site, and at five locations off-site. All dosimeters are changed periodically. Control chips are read and their contribution subtracted from the values of the field chips. A set of chips irradiated with a radium-226 standard source is also read, and these values are used to convert the individual field readings to dose.

The EPA-AIRDOSE/RADRISK atmospheric dispersion code is used to calculate the dose at the fence line and the dose received by the nearest individual on the 16 compass segments according to 40 CFR Part 61, Subpart H, "National Emission Standard for Radionuclide Emissions from Department of Energy (DOE) Facilities" (U.S. Congress 1990). The computer model uses a modified Gaussian plume equation to estimate both horizontal and vertical dispersion of radionuclides. The results, based on a total release of 6.0 TBq/yr (163 Ci/yr) of these activation products at the location of the APS, indicate an exposure of 0.07 μSv/yr (7×10^{-3} mrem/yr) for the nearest resident, who would be located west-southwest of the Laboratory. The highest dose received by off-site residents from source term elements currently released from the Argonne site is estimated to be about 5.2 μSv/yr (0.52 mrem/yr). This exposure level would be to a resident north of the site standing in his yard throughout the entire year. The increased exposure these same residents may receive as a result of the APS facility is about a 1% increase over the current Argonne emissions.

8.2.4.1 Radionuclides and Off-Site Dose Estimate

The primary subsystem sources of airborne radiation at the APS are the linac and booster synchrotron. Interactions in these areas result in bremsstrahlung formation. The interaction of the bremsstrahlung component in air results in the production of a number of radioactive products, primarily through (γ, n), (γ, 2n) and photospallation reactions. Several radionuclides are formed, but only three (C-11, N-13, and O-15) are important. Of these three radionuclides, N-13 makes up about 90% of the radionuclide concentration in air. The activated gases are exhausted from the linac target area at a maximum rate of 1388 m^3/min (49000 cfm) under normal operations.

The annual release of activation products from linac operations was conservatively calculated to be about 5.2 TBq (141 Ci) (Moe 1991). About 88% of this release is in the form of N-13 (T 1/2 = 9.965 min), with the balance as shown in Table 3.16. Air sampling in the exhaust stacks of the linac and LEUTL operations has detected no measurable activity. LEA is expected to produce no measurable activity.

Production and release of radiogases by the other components of the APS accelerator systems are relatively minor compared to that of the linac. Estimates by Moe (Moe 1993a, 1993b, 1993c, 1994, 1998) of the annual release of radioactive gases from the other components are 38 GBq (1.04 Ci) from the LEUTL, 13 GBq (0.38 Ci) from the

PAR, 0.23 TBq (6.3 Ci) from the synchrotron, and 0.42 TBq (11.3 Ci) from storage ring operations. The total of all emissions is only 11% of the linac releases. Air sampling in the exhaust stacks of these systems has detected no measurable activity. Estimates of the equilibrium concentration immediately following shutdown for all of the APS system components by Moe (Moe 1993, 1993a, 1993b, 1993c, 1994, 1998) indicate values less than the derived air concentration (DAC) for occupational exposure: 0.148 Bq/cc (4×10^{-6} μCi/cc) (DOE 1994b) for each of the system components.

The current monitoring program results establish that radioactive emissions from existing Argonne facilities and the APS are low and do not pose a threat to the health or safety of those living in the vicinity of the site.

9.0 FACILITY DECONTAMINATION AND DECOMMISSIONING

It is difficult to estimate the useful lifetime of the APS before decommissioning because (1) the degree and duration of future user demand for continuing scientific-research use of the facility is unknown, and (2) future development of accelerator and insertion device technology may enable this facility to evolve into a next-generation synchrotron radiation source, thereby extending its useful lifetime for research.

Nevertheless, it is worthwhile to consider decommissioning procedures that might be necessary for the APS facility after some 20-30 years of operation. During the past 20 years, four electron accelerators of energies greater than 1 GeV (Cornell, 1.5 GeV; California Institute of Technology, 1.0 GeV; Cornell, 2.5 GeV; and Massachusetts Institute of Technology, 6 GeV) have been decommissioned. Decommissioning experience at these and at the Argonne 12.5-GeV proton synchrotron provides a relevant experience base to draw upon in developing decommissioning plans for the APS.

Decommissioning of the APS and associated facilities would be similar to that of other electron (or positron) accelerator/storage ring facilities of comparable energy and design. The decontamination and decommissioning of the APS accelerator enclosure and technical components will not be unusual or complicated. Equipment and facilities installed outside of the accelerator shielding enclosures will not be activated. Hence, the APS should not present any unique problems. Decommissioning would be performed using technology available at the time and would comply with DOE Order O 435.1, Chg. 1 (DOE 2001b) where applicable. However, the steps and considerations to be addressed will include the following:

9.1 Equipment Inventory

An equipment inventory would be completed to assess equipment that will become available after closure of the facility. Hardware and equipment installed outside the accelerator enclosure would be excessed using standard Argonne procedures for disposition of excess government properties.

9.2 Shutdown

After orderly shutdown and disconnection of operating systems, electrical power, and cooling water systems to the accelerator facilities, physical and administrative controls for limiting access to the facilities would be maintained.

9.3 Survey of Residual Activities

Every component in the accelerator enclosures would be surveyed by health physics personnel to identify and tag any radioactive components. Based on the documented

radiation survey, all activated materials and equipment would be inventoried and kept under continued surveillance. Except for the various septum magnets in the injector system, lead and densalloy primary beam stops (used in the PAR and synchrotron), and associated shielding, it is anticipated that most components would be essentially free of radioactivity. The volume of activated materials is estimated to be less than one cubic meter (1.3 cubic yards). The level of activity would depend upon the length of operation, but residual dose rates are not expected to exceed a few tenths of a milliSievert per hour at a distance of 8 cm (3 in). Once categorized by type and radioactivity level, all excess accelerator equipment would be ready for removal.

It is anticipated that the inventory would include three general categories of components:

- Contamination-free components would be removed to a temporary storage area, possibly a portion of the experiment hall. Experience with decommissioning of other accelerator facilities indicates that magnets, power supplies, and vacuum pumps belong to this category and are reusable at other accelerator facilities.

- Reusable items with some residual radioactivity would be removed under health physics supervision and stored in a separate radiologically controlled location for future shipment. Packaging and shipment of these items would follow U.S. Department of Transportation (DOT) specifications. For example, the decommissioned electron linac from the Harvard/MIT 6-GeV synchrotron was relocated and is currently used as the injector for the National Synchrotron Light Source (NSLS) at Brookhaven National Laboratory (BNL).

- Nonreusable items with some residual radioactivity would be packaged according to DOT specifications and shipped to a DOE-approved radioactive waste disposal site. This proposed action might involve cutting of large pieces, with monitoring by health physics, into sizes suitable for shipment. In all cases, radioactive and nonradioactive components would be kept segregated.

10.0 REFERENCES

Algermissen et al. 1982. Probabilistic Estimates of Maximum Acceleration and Velocity in Rock in the Contiguous United States, Open-File Report 82-1033, U.S. Geological Survey, 1982.

American Conference of Governmental Industrial Hygienists (ACGIH) 1997. 1997 Threshold Limit Values for Chemical Substances and Physical Agents and Biological Exposure Indices, ACGIH, Cincinnati, OH, 1997.

American National Standards Institute (ANSI) 1999. Quality Systems Guide for Research, ANSI/ASQ Z 1.13-1999, American National Standards Institute, Washington, D.C., 1999.

American National Standards Institute (ANSI) 2008. Quality Management Systems Requirement Standard, ANSI/ISO/ASQ Q9001-2008, American National Standards Institute, Washington, D.C., 2008.

Argonne National Laboratory 1979. Environmental Impact Statement (Draft), Argonne National Laboratory, Argonne, IL, 1979.

Argonne National Laboratory 1986. 6-GeV Synchrotron X-Ray Source Conceptual Design Report, ANL-86-8, Argonne National Laboratory, Argonne, IL, February 1986.

Argonne National Laboratory 1990. APS Preliminary Safety Analysis Report, Argonne National Laboratory, Argonne, IL, 1990.

Argonne National Laboratory 1992a. "Access Control and Interlock System Technical Review," Report of the APS Project Director's Review, November 10-11, 1992, Argonne National Laboratory, Argonne, IL, 1992.

Argonne National Laboratory 1994a. Advanced Photon Source Accelerator Systems Safety Assessment Document, APS-3.2.2.1.0 (Revision 1), Argonne National Laboratory, Argonne, IL, October 1994.

Argonne National Laboratory 1994b. APS Beamline Design and Construction Requirements. A Reference Manual for Designers and Builders, Version 1.0, ANL/APS/TB-14, Argonne National Laboratory, Argonne, IL, May, 1994 (continually updated).

Argonne National Laboratory 1995. APS Experimental Beamline Safety Assessment Document, APS-3.3.2.1.0, Argonne National Laboratory, Argonne, IL, January 1995.

Argonne National Laboratory 1996. Advanced Photon Source Final Safety Assessment Document" APS-3.1.2.1.0, Argonne National Laboratory, Argonne, IL, June 1996.

Argonne National Laboratory 2001. Advanced Photon Source Conduct of Operations Manual, APS- 3.1.1.1.0 (Revision 2), Prepared by the Advanced Photon Source Conduct of Operations Committee, Argonne National Laboratory, Argonne, IL, April 2001.

Argonne National Laboratory 2006. Advanced Photon Source Safety Assessment Document, APS-3.1.2.1.0, Rev. 3, Argonne National Laboratory, Argonne, IL, July 2006.

Argonne National Laboratory 2010. Argonne National Laboratory Quality Assurance Program Plan, Rev. 2, Argonne National Laboratory, Argonne, IL, March 30, 2010 (https://docs.anl.gov/main/groups/intranet/@shared/@lms/@governance/documents/report/108263.pdf).

Argonne National Laboratory onlineA. Waste Handling Procedures Manual, Argonne, Illinois Site, Prepared by Waste Management Department, Argonne National Laboratory, Argonne, IL (online document updated as required).

Argonne National Laboratory onlineB. Environment, Safety and Health Manual, Argonne National Laboratory-East, Prepared by Environment, Safety and Health Division, Argonne National Laboratory, Argonne, IL (online legacy document).

Argonne National Laboratory onlineC. Hoisting and Rigging Manual, Argonne National Laboratory-East, Prepared by Plant Facilities and Services Safety Group, Argonne National Laboratory, Argonne, IL (online legacy document).

Argonne National Laboratory onlineD. Safety Interlocks Group Safety Software Configuration Control, APS_1412987, prepared by the Advanced Photon Source Safety Interlocks Group, Argonne National Laboratory, Argonne, IL (internal online document updated as required).

Argonne National Laboratory onlineE. ACIS Key Replacement, APS_1192552, prepared by the Advanced Photon Source Safety Interlocks Group, Argonne National Laboratory, Argonne, IL (internal online document updated as required).

Argonne National Laboratory onlineF. ACIS Key Inventory, APS_1202693, prepared by the Advanced Photon Source Safety Interlocks Group, Argonne National Laboratory, Argonne, IL (internal online document updated as required).

Berkvens, P., et al. 2007. "Shielding Assessment of the Optics Hutches of the ESRF Beamlines," Proc. of the RadSynch07 Workshop, Saskatoon, 2007.

Braeuer, E. and Thomlinson, W. 1988. Nucl. Instrum. Methods **A266**, p. 195.

Chapman, D., et al. 1988. Nucl. Instrum. Methods **A266**, p. 191.

Coats, D.W., and Murray, R.C. 1984. Extreme Wind/Tornado Hazard Models for DOE Sites, Natural Phenomena Hazards Modeling Project, UCRL-53526, Lawrence Livermore National Laboratory, Livermore, CA, 1984.

Davey, S. 1993. "APS Sector Layout: Utilities, etc.," ANL/APS/TB-9, Argonne National Laboratory, Argonne, IL, February 1993.

Dejus, R.J., et al. 1992. Nucl. Instrum. Methods **A319**, 207.

Denmark, W. 1974. "The Climate of Illinois," Climate of the States, Vol. 1, U.S. Department of Commerce, National Oceanic and Atmospheric Administration, 1974.

Dooling, J. 2010. "Dose Calculations using MARS for Bremsstrahlung Beam Stops and Collimators in APS Beamline Stations," ANL/APS/TB-54, Argonne National Laboratory, Argonne, IL, August 2010.

Factory Mutual Engineering Corp. 1986. Loss Prevention Data, Factory Mutual Data Sheet 5-4, September 1986.

Farkas, Z.D., et al. 1974. SLED: A Method of Doubling SLAC's Energy, Stanford Linear Accelerator Center, Menlo Park, CA, 1974.

Federal Register 1989. 54 FR 18326, April 28, 1989.

Federal Register 1990. "Finding of No Significant Impact," Vol. 55, No. 95, May 16, 1990.

Ferrari, A., et al. 2005. "FLUKA: A Multi-particle Transport Code," CERN-2005-10, INFN/TC_05/11, SLAC-R-773, 2005.

Futrell, W. L., Jr., 1992. "A Description and Status of Site-Wide Fire Protection Systems and Programs at Argonne National Laboratory, Argonne, Illinois," Consultant Report, Aiken, SC, 1992.

Golchert, N.W., et al. 2003. Argonne National Laboratory - East Site Environmental Report for Calendar Year 2002, ANL-03/2, Argonne National Laboratory, Argonne, IL, 2003.

Hadley, J.B., and Devine, J.F. 1974. Seismotectonic Map of the Eastern United States, MF-620, U.S. Geological Survey, Arlington, VA, 1974.

Ipe, N., et al. 1993. "Guide to Beamline Radiation Shielding Design at the Advanced Photon Source," ANL/APS/TB-7 (also published as SLAC TN93-5), November 1993, and Errata.

Job, P. K., et al. 1994. "Bremsstrahlung Scattering Calculations for the Beam Stops and Collimators in the APS Insertion-Device Beamlines," ANL/APS/TB-20, Argonne National Laboratory, Argonne, IL, December, 1994.

Kuzay, T. 1993. "Functional Description of APS Beamline Front Ends," ANL/APS/TB-5, February 1993, Argonne National Laboratory, Argonne, IL.

Lineback, J.A. 1979. Quaternary Deposits of Illinois, Illinois State Geological Survey, Urbana, IL, 1979.

March, C.J. 1993. Fire Protection Appraisal Report APS Facilities, Argonne National Laboratory, Argonne, IL, April 23, 1993.

Moe, H.J. 1991. Advanced Photon Source Radiological Design Considerations, APS-LS-141 (Revised July 1991), Argonne National Laboratory, Argonne, IL, 1991.

Moe, H.J. 1992. "Revised Expected Dose Rate Distribution from the Tungsten Converter Target Based Upon 250 MeV Operation," Memorandum to M. M. White, Argonne National Laboratory, Argonne, IL, December 17, 1992.

Moe, H.J. 1993. "Radiological Considerations for 450 MeV Positron and 650 MeV Electron Operations in the Linac Tunnel," Memorandum to M. M. White, Argonne National Laboratory, Argonne, IL, April 30, 1993.

Moe, H.J. 1993a. "Radiological Considerations for the Operation of the Positron Accumulator Ring (PAR)," Memorandum to M. D. Borland, Argonne National Laboratory, Argonne, IL, August 29, 1993.

Moe, H.J. 1993b. "Radiological Considerations in the Operation of the Booster Synchrotron," Memorandum to S. Milton, Argonne National Laboratory, Argonne, IL, September 10, 1993.

Moe, H.J. 1993c. "Radiological Considerations in the Operation of the Two Sector Test in the Storage Ring," Memorandum to G. Decker, Argonne National Laboratory, Argonne, IL, September 18, 1993.

Moe, H.J. 1994. "Radiological Considerations in the Operation of the Storage Ring," Memorandum to G. Decker, Argonne National Laboratory, Argonne, IL, July 31, 1994;

replaced by "Radiological Considerations for the operation of the Advanced Photon Source Storage Ring, Revised, APS-LS-295 (revised 1997), Argonne National Laboratory, Argonne, IL.

Moe, H.J. 1998. "Radiological Considerations in the Operation of the Low Energy Undulator Test Line (LEUTL) Storage Ring," APS-LS-272, Argonne National Laboratory, Argonne, IL, April 10, 1998.

Mokhov, N.V. "The Mars Code System User's Guide," Fermilab-FN-628 (1995); N.V. Mokhov, S.I. Striganov, "MARS15 Overview," Fermilab-Conf-07/008-AD (2007) in Proc. of Hadronic Shower Simulation Workshop, Fermilab, September 2006, AIP Conf. Proc. 896, pp. 50-60 (2007); and http://www-ap.fnal.gov/MARS/.

National Bureau of Standards 1979. Radiological Safety in the Design and Operation of Particle Accelerators, ANSI N43.1, NBS Handbook 107, National Bureau of Standards, Gaithersburg, MD, 1979.

National Council on Radiation Protection 1986. Radiation Alarms and Access Control Systems, NCRP Report No. 88, National Council on Radiation Protection, 1986.

National Fire Protection Association 1991. Code for Safety to Life from Fire in Buildings and Structures, NFPA 101, National Fire Protection Association, Quincy, MA, 1991.

National Fire Protection Association 1992. Standard for Installation of Private Fire Service and Their Appurtenances, NFPA 24, National Fire Protection Association, Quincy, MA, 1992.

National Fire Protection Association 1993. Standard for Emergency and Standby Power Systems, NFPA 110, National Fire Protection Association, Quincy, MA, 1993.

National Fire Protection Association 1994. Electrical Equipment Maintenance, NFPA 70B, National Fire Protection Association, Quincy, MA, 1994.

National Fire Protection Association 1995. Electrical Safety Requirements for Employee Workplace, NFPA 70E, National Fire Protection Association, Quincy, MA, 1995.

National Oceanic and Atmospheric Administration 1970. Tornado, NOAA/PI 70007, 1970.

National Oceanic and Atmospheric Administration 1980. 1979 Annual Summary of Local Climatological Data, Chicago, Illinois Midway Airport, Environmental Data Service, 1980.

Nelson, R.C. 1988. Letter to A.L. Taboas, U.S. Department of Energy, U.S. Department of the Interior Fish and Wildlife Service, Rock Island, IL, February 9, 1988.

Nelson, W. R., et al. 1985. "The EGS4 Code System," SLAC-265, 1985.

Pisharody, M., et al. 1998. "Dose Measurements of Bremmstrahlung-Produced Neutrons at the Advanced Photon Source," ANL/APS/LS-269; Argonne National Laboratory, Argonne, IL, August 1998; and Pisharody, M., et al. "Dose Measurements of Bremsstrahlung-produced Neutrons from Thick Targets," Nucl. Instrum.Methods **A430** (1999) 542-558.

Sasman, R.T., et al. 1981. Verification of the Potential Yield and Chemical Quality of the Shallow Dolomite Aquifer in DuPage County, Illinois. Circular 149, Illinois State Water Survey, Champaign, IL. 1981.

Soil and Material Consultants, Inc. 1986. 6 GeV Synchrotron X-Ray Source, Geotechnical Investigation, report to Argonne National Laboratory, File No. 8799, Preliminary Draft, 1986.

Stanford Linear Accelerator Center 1988. Health Physics Manual of Good Practices for Accelerator Facilities, SLAC 327, Stanford Linear Accelerator Center, Menlo Park, CA, 1988.

Suter, M., et al. 1959. Preliminary Report on Ground-Water Resources of the Chicago Region, Illinois, Cooperative Ground-Water Report I, Illinois State Geological Survey, Urbana, IL, 1959.

U.S. Congress 1990. National Emission Standard for Radionuclide Emissions from Department of Energy (DOE) Facilities, 40 CFR Part 61, Subpart H, Code of Federal Regulations, Office of Federal Register, National Archives and Records Administration, Washington, D.C., 1990.

U.S. Congress 1994. "Electrical," Occupational Safety and Health Standards, 29 CFR 1910, Subpart S, Code of Federal Regulations, Office of Federal Register, National Archives and Records Administration, Washington, D.C., 1994.

U.S. Congress 1996a. "Toxic and Hazardous Substances," Occupational Safety and Health Standards, 29 CFR 1910, Subpart Z, 1910.1025-Lead, Code of Federal Regulations, Office of Federal Register, National Archives and Records Administration, Washington, D.C., 1996.

U.S. Congress 1996b. "Occupational Health and Environmental Controls," Safety and Health Regulations for Construction, 29 CFR 1926, Subpart D, 1926.62 Lead, Code of Federal

Regulations, Code of Federal Regulations, Office of Federal Register, National Archives and Records Administration, Washington, D.C., 1996.

U.S. Congress 1996c. "Electrical," Safety and Health Regulations for Construction, 29 CFR 1926, Subpart K, Code of Federal Regulations, Code of Federal Regulations, Office of Federal Register, National Archives and Records Administration, Washington, D.C., 1996.

U.S. Department of Agriculture 1979. Soil Survey of DuPage and Part of Cook Counties, Illinois, U.S. Department of Agriculture Soil Conservation Service, in cooperation with the Illinois Agricultural Experiment Station, Urbana, IL, 1979.

U. S. Department of Energy 1982. Environmental Assessment Related to the Operation of Argonne National Laboratory, DOE/EA-0181, Prepared for the U.S. Department of Energy, Argonne, IL, 1982.

U.S. Department of Energy (EH) 1985. National Environmental Policy Act, DOE Order 5440.1C, U.S. Department of Energy, Washington, D.C.; superseded by National Environmental Policy Act Compliance Program, DOE O 451.1B, Chg. 1, September 28, 2001.

U.S. Department of Energy (EP) 1988a. Emergency Notification, Reporting, and Response Levels, DOE Order 5500.2A, U.S. Department of Energy, Washington, D.C., 1988.

U.S. Department of Energy (EH) 1988b. General Environmental Protection Program, DOE Order 5400.1 (11/9/88) (Ch 001 6/29/90), U.S. Department of Energy, Washington, D.C.; superseded by Environmental Protection Program, DOE O 450.1, January 15, 2003.

U.S. Department of Energy (AD) 1989. General Design Criteria, DOE Order 6430.1A (Cancels DOE Order 6430.1), U.S. Department of Energy, Washington, D.C.; superseded by Facility Safety, DOE O 420.1A, 5/20/02).

U.S. Department of Energy 1990b. Environmental Assessment, Proposed 7-GeV Advanced Photon Source, DOE/EA-0389, U.S. Department of Energy, Washington, D.C., 1990.

U.S. Department of Energy (EH) 1992a. U.S. Department of Energy Radiological Control Manual, DOE/EH-0256 T (DOE N 5480.6), U.S. Department of Energy, Washington, D.C., 1992.

U.S. Department of Energy (ER) 1992b. Safety of Accelerator Facilities, DOE Order 5480.25, U.S. Department of Energy, Washington, D.C.; superseded by Safety of Accelerator Facilities, DOE O 420.2A.

U.S. Department of Energy (NE) 1993a. Occurrence Reporting and Processing of Operations Information, DOE Order 5000.3B, U.S. Department of Energy, Washington, D.C., 1993.

U.S. Department of Energy 1993b. Guidance for an Accelerator Facility Safety Program, Draft #7, DOE 5480.25 Guidance, U.S. Department of Energy, Washington, D.C.; superseded by Accelerator Facility Safety Implementation Guide for DOE O 420.2B, Safety of Accelerator Facilities, DOE G 420.2-1, July 1, 2005.

U.S. Department of Energy (EH) 1993c. Fire Protection, DOE Order 5480.7A, U.S. Department of Energy, Washington, D.C., 1993.

U.S. Department of Energy 1993d. Radiation Protection of the Public and the Environment, DOE Order 5400.5, Chg. 2, (1/7/93), U.S. Department of Energy, Washington, D.C.

U.S. Department of Energy (EH) 1994a. U.S. Department of Energy Radiological Control Manual, DOE/EH-0256 T (DOE N 5480.6), Revision 1, U.S. Department of Energy, Washington, D.C., April 1994.

U.S. Department of Energy 1994b. Occupational Radiation Protection, Code of Federal Regulations, Title 10, Part 835, U.S. Government Printing Office, Washington, D.C., 1994.

U.S. Department of Energy 2001a. Safety of Accelerator Facilities, DOE Order DOE O 420.2A, U.S. Department of Energy, Washington, D.C., 2001.

U.S. Department of Energy 2001b. Radioactive Waste Management, DOE O 435.1, Chg. 1, U.S. Department of Energy, Washington, D.C., August 28, 2001.

U.S. Department of Energy 2001c. Conduct of Operations Requirements for DOE Facilities, DOE O 5480.19, Chg. 2, U.S. Department of Energy, Washington, D.C., October 23, 2001.

U.S. Department of Energy 2003. Environmental Protection Program, DOE Order O 450.1, U.S. Department of Energy, Washington, D.C., January 15, 2003.

U.S. Department of Energy 2005a. Comprehensive Emergency Management System, DOE Order O 151.1C, U.S. Department of Energy, Washington, D.C., November 2, 2005.

U.S. Department of Energy 2005b. Safety Software Guide for Use with 10 CFR 830, Subpart A, Quality Assurance Requirements, and DOE O 414.1C, Quality Assurance, DOE G 414.1-4, U.S. Department of Energy, Washington, D.C., June 17, 2005.

U.S. Department of Energy 2008. DOE Standard Radiological Control, DOE-STD-1098-2008 Change Notice 1, U.S. Department of Energy, Washington, D.C. 2008.

U.S. Department tof Energy 2009. Occupational Radiation Protection, Title 10, Code of Federal Regulations, Part 835, 10 CFR 835, U.S. Department of Energy, Washington, D.C., corrected 2009.

U.S. Department of Energy 2011a. Safety of Accelerator Facilities, DOE O 420.2C, U.S. Department of Energy, Washington, D.C., July 21, 2011.

U.S. Department of Energy 2011b. Quality Assurance, DOE O 414.1D, U.S. Department of Energy, Washington, D.C., April 25, 2011.

U.S. Department of Energy, 2011c. Integrated Safety Management Policy, DOE P 450.4A, U.S. Department of Energy, Washington, D.C., April 25, 2011.

Yun, W.B., et al. 1995. "Radiation Shielding of Insertion-Device Beamlines of SRI-CAT Sector 2 Using a Mirror as the First Optical Element," ANL/APS/TB-21, Argonne National Laboratory, Argonne, IL, February 1995.

Unreviewed Safety Issue (USI) for Addendum 1: 2018-400 APS-357

3.0 APS FACILITY, SITE AND OPERATIONS DESCRIPTION

3.11 Engineered Safety Systems

3.11.2 Personnel Safety System

3.11.2.1 Introduction

The APS has the potential of operating with up to 70 beamlines. Each beamline includes multiple shielded enclosures containing optics and experimental equipment. Personnel access into these enclosures will be controlled during beamline operation. The APS Personnel Safety System (PSS) is the engineered safety system for each beamline for controlling access into the enclosures, ensuring that access is allowed only under safe conditions (i.e., beam is off in the enclosure), and to disable storage ring operation if improper access is gained or a PSS system fault is detected that could potentially endanger personnel.

The PSS for each beamline interfaces directly with the accelerators Access Control and Interlock System (ACIS) for disabling storage-ring operation. Each PSS is totally isolated from the PSS of any other beamline to prevent a fault from one beamline affecting the operation of other beamlines.

Each PSS is designed by APS/AES staff to meet the requirements of the beamline after review and concurrence by the PSC Design Review Committee (PDRC). The APS/AES staff are also responsible for the installation, verification, validation, and maintenance of the system. Although beamline designs require some flexibility in possible modes of operation, types of devices to be interlocked, and other operational requirements, the basic configuration and control aspects remain the same. Custom control panels are designed to incorporate any special features. The system documentation, test procedures, and training include all basic as well as specialized equipment and operating modes.

The PSS is designed to comply with the following:

- DOE Order O 420.2A, “Safety of Accelerator Facilities” (DOE 2001a) (older systems.)
- DOE Order O 420.2C, “Safety of Accelerator Facilities” (Aug 1, 2014) (newer systems.)
- “APS Preliminary Safety Analysis Report” (ANL 1990).

- SLAC 327, "Health Physics Manual of Good Practices for Accelerator Facilities" (SLAC 1988).
- NBS Handbook 107, "Radiological Safety in the Design and Operation of Particle Accelerators," ANSI N43.1 (NBS 1979).
- NCRP Report No. 88, "Radiation Alarms and Access Control Systems" (NCRP 1986)

Among the more important aspects of conformance, the PSS satisfies the following requirements:

- The system is designed to be fail safe, so common failures (e.g., open wires) leave the system in a safe, beam-off state.
- The designs incorporate redundant protection, ensuring that no single component or subsystem failure leaves the system in an unsafe, beam-on condition.
- Provisions for testing are included, so the proper component and system functions may be completely validated.
- Access and egress controls are incorporated so that personnel are never exposed to x-ray radiation. These include emergency shut-off devices, status signs, search boxes, and emergency exit mechanisms.
- A document control system is incorporated for keeping documentation complete, accurate, and current.
- A configuration management system protects the software against unauthorized and inadvertent modification. Critical devices are clearly labeled to note that tampering is strictly forbidden.
- User training for proper system operation is provided and users are made aware of the consequences of tampering or improper use of the PSS.

3.11.2.2 Beamline Personnel Safety System (PSS) Description

3.11.2.2.1 Overview

The APS Personnel Safety System (PSS) is the engineered safety system designed to allow safe beamline operation only after specific conditions are satisfied; i.e., the involved station is searched, access doors are closed and locked, any required beam shutters are in place, and the proper control keys are in an operating mode. Conversely, operation is tripped and/or inhibited by the opening of any access door, the actuation of any emergency shutdown button, the improper position of a needed beam shutter, or a control key removed from its control panel.. The PSS incorporates the following equipment:

- Programmable Logic Controllers (PLCs) installed in each chain to perform the system's decision logic.(original systems)
- Safety certified PLC to perform the systems decision logic (new systems)
- PLC input/output (I/O) modules which interface the PLCs with the switches, lights, locks, relays, and other devices used by the PSS.
- Centralized Uninterruptible Power Supplies (UPSs), to protect against AC power loss.
- Control panels and status displays.
- Station door hardware (status switches, locking mechanisms).
- Station search-and-secure hardware (search buttons, visible and audible warning indicators, emergency shutdown buttons).
- Interfaces to beam shutdown safety devices, such as front-end or beamline safety shutters and photon shutters (position-indicating switches and position-controlling solenoids).
- Interfaces to the ACIS, the Front-End Equipment Protection System (FEEPS), the Beamline Equipment Protection System (BLEPS), and the Experlmental Physics and Industrial Control System (EPICS)
- Dedicated equipment racks, conduit, cable trays, and cables.

The probability of a common cause failure is reduced by using different programmers to develop the software for each chain or by thorough reviews or acceptance testing before deploying to the field.

The program residing in the PLC is protected from modification by a removable key. The key must be inserted and turned to allow the program to be replaced or modified. During normal operations, this key is set to disallow any such actions and removed.

Each system has a unique hardwired address, checksum, or safety signature. This is used to insure that the software written for another beamline is not installed on a beamline for which it was not intended.

The PLC and Input/output modules have internal timers and diagnostics to verify the PLC program is executing normally and communicating with the input/output modules. If a problem is detected with either, the system is designed to de-energize all outputs. These outputs control the critical devices and the permits to the ACIS. De-energizing the outputs will abort the stored beam and insert all safety

shutters.The PLCs interface for the ACIS, FEEPS, BLEPS, and front-end components are located in locked relay racks and are inaccessible to the users.

Equipment to which the user needs access, such as door controls, shutter controls, and mode controls, are located in equipment cabinets located on or near the experiment stations. These cabinets also contain the I/O modules for the PSS equipment at the station location. The equipment cabinets are locked to prevent uncontrolled access to these I/O modules and the PSS wiring.

APS experimental station control panels provide:

- a logical visual indication of the beamline status
- beamline safety shutter controls
- mechanisms to administratively place stations in a safe accessable state

3.11.2.2.2 Station Control Panel

A station control panel is used to open and close safety shutters, gain safe access to the experimental station, and provide visible feedback regarding the states of the accelerator permits, other experimental stations, and the shutters. The status display consists of a chain of indicators that are laid out in a manner consistent with the beamline layout. Indicators are green if the related devices or systems permit the beam to be propagated down the beamline and are red if configured to stop the beam. The beamline safety-shutter and station-enable controls are located on the panel next to the appropriate indicators.

The Station APS Enable key is used by the APS facility to administratively enable or disable a station for User control. The Station User key(s) allows a user to disable the shutter control for a station and allows administrative control by the user on the operation of a beamline or section of the beamline.

Some versions of the PSS incorporate a third PLC (Chain C) and acts as the interface to external systems. This third PLC provides command/control functionality dependent on the permissives of the two safety-enforcement PLC chains. . Control panels for this PSS will incorporate “soft,” that is, programmable, displays with touch-sensitive surfaces for user selections. In the descriptions which follow, the visible indicator devices are replaced by display panel objects, but the keyswitches will remain in place as described.

3.11.2.2.3 Station Door Control Panel (pneumatic doors only)

This panel provides pushbuttons with visual indicators for releasing the magnetic door locks and opening the door. The buttons are inactive if the proper access conditions have not been established. The number of these panels at each beamline

is determined by the position of the stations, the number of doors at each station, and other design requirements.

3.11.2.2.4 System Control Panel

Each beamline requires a system control panel. This panel is not used by the users. and provides the means to reset PSS faults. This panel is not used by the users.

3.11.2.2.5 Faults and Trips

- Faults – A fault is generated when an internally inconsistent condition is detected, i.e., a shutter being sensed as opened and closed at the same time, a shutter that fails to close when its permit is removed, a shutter that opens without a permit, etc. The Faults are broken down into Storage Ring Permit Removing Faults and Shutter Permit Removing Faults. A fault will require someone from the SI Group, User Operations Group (Floor Coordinators), or the Accelerator Operations group investigate the fault and perform a local Reset before beamline operations can be restored.

- Trips - A trip is generated when a condition is detected that requires the removal of APS beam from a given beamline/station, i.e., a door is open to a station with beam present, a crash button is pressed in a station with beam present, etc. Just like the Faults the Trips are further broken down by Storage Ring Permit Removing Trips and Shutter Permit Removing Trips. A trip will require someone from the SI Group, User Operations Group, or the Accelerator Operations group investigate the trip and preform a local Reset before beamline operations can be restored

- Warnings – A warning is an indication that an improper or undesirable condition exists, but does not present any risk of beam radiation exposure to personnel. All warnings are self-resetting once the condition has cleared (returned to normal), no manual reset is required.

NOTE: Faults and trips react differently depending on the severity of the event as described below

- Storage Ring Permit Removing Faults & Trips

  These represent situations where them beam must be removed as quickly as possible, so waiting for a shutter to close is not acceptable. There are two situations that call for the beam to be removed as quickly as possible are; the possibility of personnel exposure to radiation or the possibility of a critical device being damaged

- Shutter Permit Removing Faults & Trips

  These represent situations there is no immediate danger to personnel, however there is a problem with the position sensing of a shutter, or the shutter has malfunction in some way. Therefore all shutter permits will be removed, forcing all shutters to close, before the problem can escalate to the level requiring the removal of the storage ring permit

3.11.2.2.6 Experimental Station Hardware

The experimental station doors may be operated pneumatically or manually . However, the PSS hardware for the door position monitoring and locking is the same in all cases.

The inside of the station contains one or more emergency shutdown switches ("crash buttons") that inhibit storage-ring operation when depressed if the shutters are open. The number of emergency shutdown switches is determined by the SI Group and then reviewed by the PSC Design Review Committee (PDRC)during the design review process and is based on the design of the enclosure and the equipment it will contain to ensure easy accessibility from any location within the enclosure.

Emergency entrance and egress mechanisms are located on the inside and outside of the station door. The PSS door hardware does not interfere with the access/egress mechanism operation.

The inside of the station contains one or more search buttons and visual and audible indicators of a search in progress. The number of search buttons and locations is determined by the SI Group and then reviewed by the PSC Design Review Committee (PDRC) during the design review process and is based on the design of the enclosure and the equipment it will contain. The search buttons must be depressed in the correct sequence, and the search must be completed and the door closed within a predetermined interval for the search to be considered successful by the PSS logic. At the completion of a successful search, the safety shutter buttons are activated if the other interlock conditions (keys, mode control, etc.) are satisfied.

3.11.2.3 Storage Ring ACIS and PSS Interface

All beamlines have a Global on-line/off-line keyswitch located in a junction box associated with each storage-ring sector When the keyswitch for a beamline is set to off-line, its safety shutters and associated photon shutter are prevented from opening and the PSS beam-dump signal is ignored. When the keyswitch is set to on-line, the shutters are allowed to be opened under PSS control and the ACIS monitors and reacts to the beam-dump signal from the PSS, if ACIS detects the FES not closed. The keyswitches are under the control of the AOP , and the UES Group, their use is strictly governed by administrative procedures. .

3.11.2.4 PSS Testing and Configuration Control

3.11.2.4.1 PSS Testing Overview

System testing provides the single most important contribution to safe operation. Since few failures arise during operation, a rigorous testing program has been developed that includes all the protective elements of the system. Further, the program verifies the systems integrity following any maintenance, addition of new components, or software changes.

The test verifies that the PSS operates as designed. Testing of the system is performed before the system is placed in service, after any repair and at periodic intervals of at least every twelve months consistent with DOE Order O 420.2A (DOE 2001a). A grace period of one month is allowed if made necessary by APS scheduling. The PSS test procedures are under document control.

3.11.2.4.2 PSS Configuration Control

PSS is considered a RSS, therefore, any change in the PSS operational or functional configuration must follow Change Control for Radiation Safety Shielding Policy and Procedure APS_

3.11.2.4.3 PSS Documentation

The following documentation is prepared and maintained by the group responsible for the PSS Systems :

- A description of the document control and review system for keeping documentation complete, accurate, and current
- A written functional description of PSS
- The physical and electrical configuration of each PSS
- An auditable record of PSS test results
- Records of management review and approval of the PSS
- PSS key management and replacement records
- Software requirements document and functional specifications
- Software acceptance and validation plans
- Software code files

3.12 Shielding Policy and Radiation Monitoring

Shielding incorporated into the design of the APS facility ensures that DOE ALARA objectives are met. This section describes the APS shielding policy, the calculated radiation dose levels attributable to accelerator system operation, and relevant monitoring activities.

3.12.1 Shielding Policy

Shielding for the APS is such that individual worker dose will be ALARA and less than 5 mSv/yr (500 mrem/yr). The APS shielding policy, which complies with the ALARA philosophy, is that the average work dose be below 2 mSv/yr (200 mrem/yr). Worker dose is monitored, and health physics personnel perform area surveys. For cases in which surveys indicate hourly dose rates higher than those allowed by the area designation and which may impact upon worker exposure, the cause of the radiation is investigated and additional local shielding provided, as needed, to reduce the radiation field to an acceptable level. Monitoring results are reviewed, and significant exposures, an unexpected increase in an individual's exposure, or a trend of increasing exposure over a period of time trigger an investigation into the cause of the increase. Corrective measures are then taken as needed. Passive monitors are used throughout the facility to integrate dose in various areas. The results are analyzed for objectionable doses and trends of increased doses, and shielding in these areas reevaluated and improved, as appropriate.

The APS policy for on-site nonradiation workers in the vicinity of the APS facilities requires that the average nonradiation worker dose be below 1 mSv/yr (100 mrem/yr). In addition, the dose at the site boundary from all pathways is required to be below 0.1 mSv/yr (10 mrem/yr). Present estimates of the annual doses for these two categories of exposure indicate that these requirements are being met. For future modifications of the facility, the doses shall be reevaluated and additional shielding provided if required to meet the policy requirements.

Shielding guidelines and requirements have been developed and submitted to the Beamline Management to provide the basis for their beamline shielding designs (Ipe et al. 1993, Job et al. 1994). These requirements also form the basis for the ionizing radiation hazard analyses described in section 4.2. The Beamline Safety Design Review Steering Committee will evaluate all shielding designs that do not conform to the criteria presented in the above-referenced documentation.

The APS policy goal with respect to accidental exposures, exclusive of MCI conditions that are considered very low probability events, is to provide enough shielding to mitigate the dose consequence to <1 mSv (100 mrem) for any one occurrence. Potential accident situations have been analyzed and the dose consequences evaluated. Additional local shielding has been added at relevant potential loss points to achieve the policy goal. As stated above, when facility

modifications are made, the hazard potential will be evaluated and additional shielding supplied, as needed.

The APS policy for placement and maintenance of supplemental shielding requires formal configuration control. APS implementation of this policy includes:

- Maintenance of controlled documentation of shielding penetrations and supplemental shielding configuration,
- Independent verification of removal and replacement of shielding before operation of the accelerators and beamlines,
- Independent review of accelerator and Beamline Management beamline supplemental shielding design and calculations by experts in the APS
- Determination of efficacy of shielding by radiation measurements during normal operation as well as during controlled simulation of abnormal particle beam loss and worst-case photon beam loss scenarios,
- Administrative and hardware control of the operating envelope parameters and beamline operating limits to prevent operation of the accelerators or beamlines outside the verified capability of the shielding, and
- Ongoing review of the radiation environment and implementation of challenging but realistic ALARA goals by the APS divisions and Beamline managements.

Each supplementary shield is assigned an identification number that is affixed to the shield upon completion of installation.

A logbook is kept for all supplemental shields contained within and/or constituting the accelerator enclosure and is maintained by APS-UES personnel. A walkthrough is performed as part of the documented start-up procedures by APS-UES personnel or a designated individual to verify that the shield logbook reflects the actual supplemental shielding configuration and that the shielding is secured as described in the shield logbook.

All applicable beamline shielding design documentation and pertinent correspondence is maintained as part of the Beamline Safety Design Review Steering Committee files for each beamline. The Floor Coordinator responsible for the beamline maintains a logbook of the beamline shielding configuration. Regular walkthroughs are performed by APS-UES personnel or a designated individual to verify that the beamline shield logbook reflects the actual shielding configuration and that the required shielding security measures are in place.

The shielding guidance and requirements include the shielding provided by white beam stops and/or safety shutters located in the beamlines. Because of the high thermal loads, these devices require active cooling to maintain the shielding

integrity. To ensure that the photon beam is shut off upon a decrease or loss of coolant in ID beamlines, each channel of the PSS is used to monitor a loss-of-cooling independently.