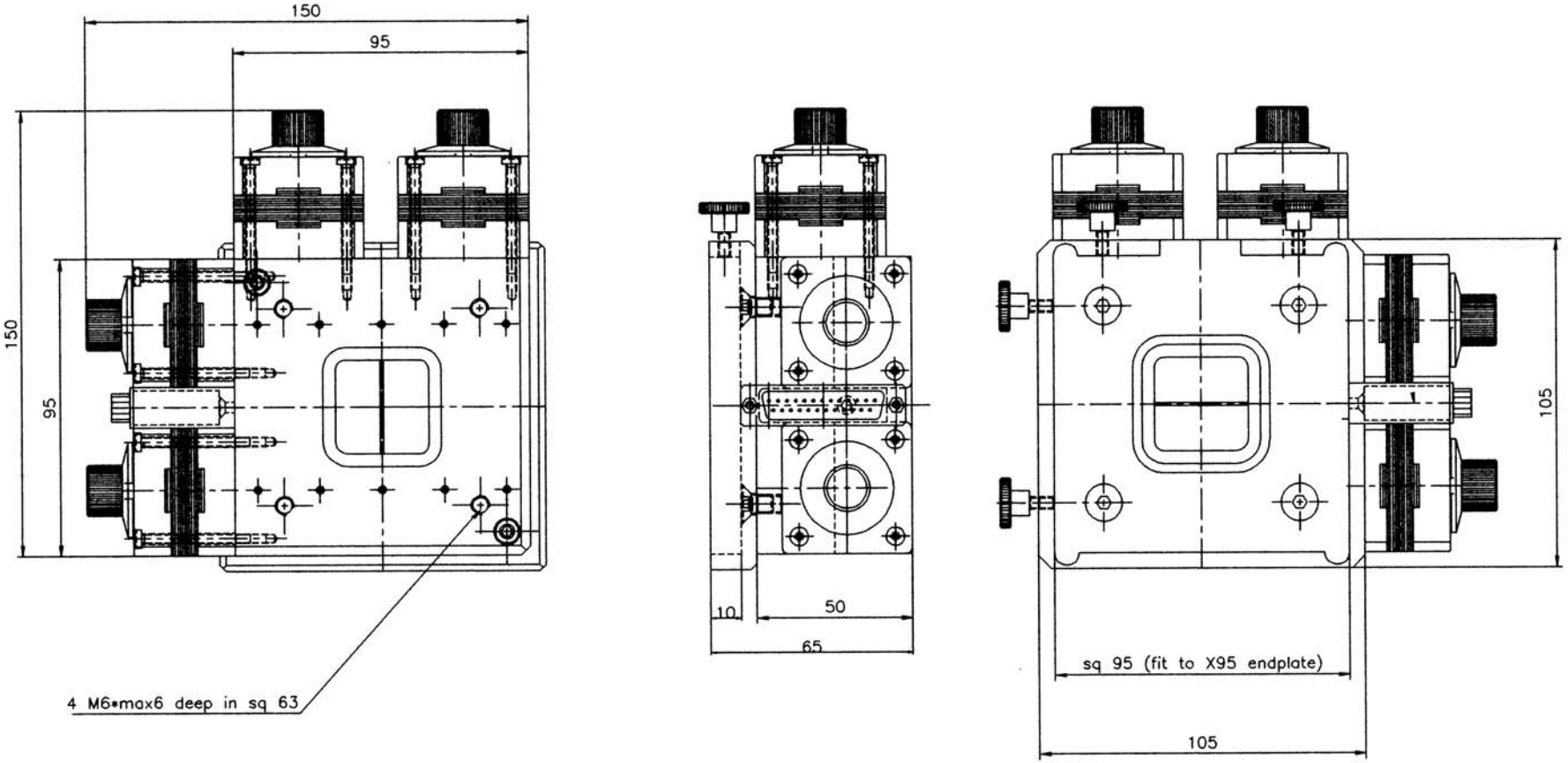

Pos	Pc	Name	Mat. or Dwg.nr.	Remarks
	1			

Date	Constr.		Scale
04-09-99	Jens Linderholm	JJ X-Ray Danish Science Design	1 : 1
Surface		Sketch of JJ X-Ray Slit type 3	2– 961201g2