A Look at MAX IV: With an eye on APS-U

Curt Preissner and Jeff Collins

ASD Seminar 2015-04-22

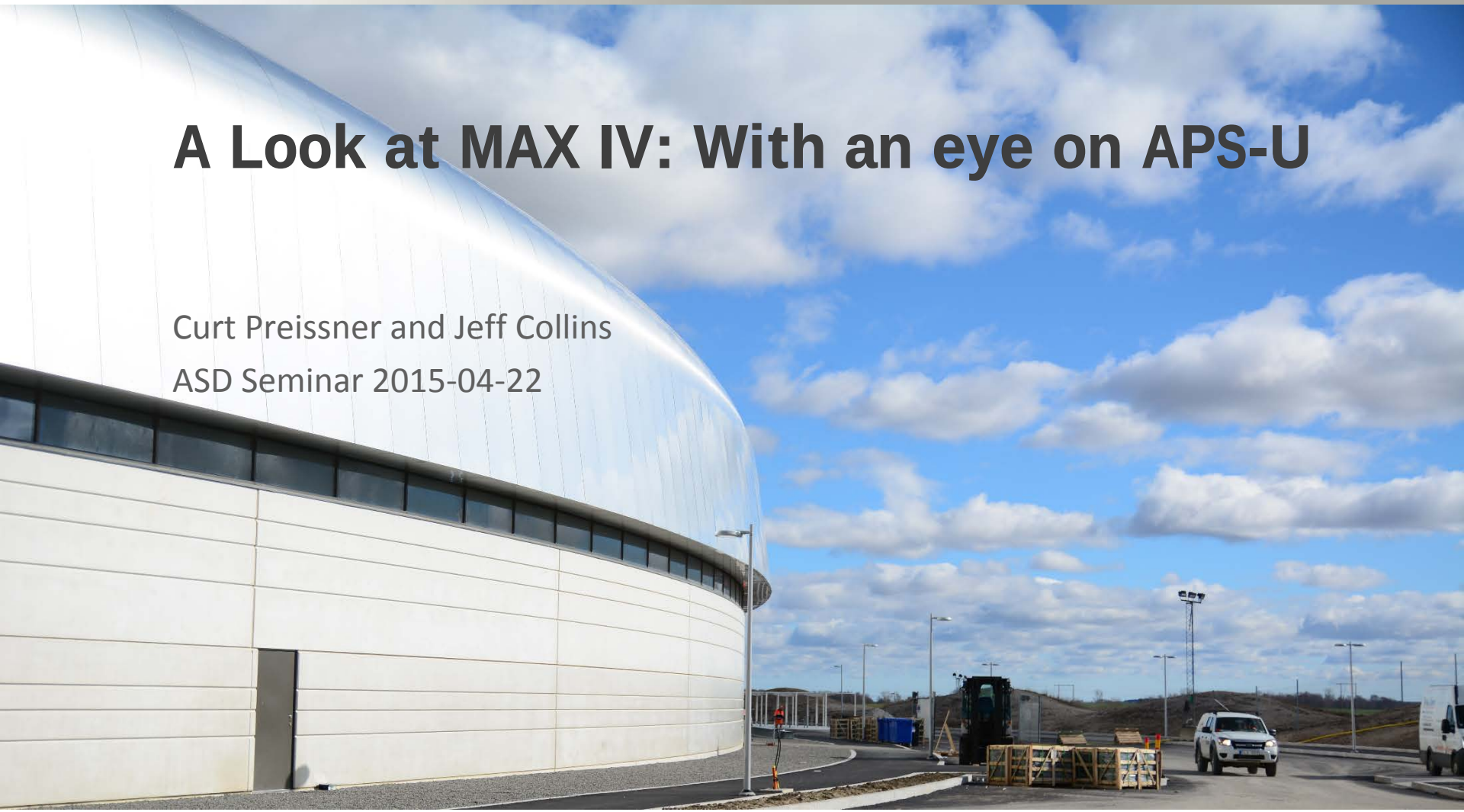

Overview

- Purpose
- MAX IV Facility – a photo tour
- Ambient vibration measurements
- Modal analysis of magnet U3 of achromat 20 (middle and largest magnet)
- Relating modeling to reality
- Summary

Part I: Photo tour

“Life can only be understood backwards; but it must be lived forwards.”

– Søren Kierkegaard

Purpose

- Obtain first-hand information about:
  - Magnet dynamics,
  - MAX IV construction process, and
  - Facility vibration.
- This was also an opportunity to talk in-person with MAX IV staff.
- APS-U magnet support conceptual design is similar to MAX IV design.

Host: Brian Norsk Jensen

Vibration & Alignment Team Leader

MAX IV is located in Lund

- Lund is the oldest city in present-day Sweden (~990 AD)
- Motto: City of ideas
- Lund University is the largest in Sweden

MAX IV – Under construction

MAX IV Experimental hall

MAX IV Infield area

Mechanical systems - Water

Mechanical systems - Water

Silver solder vs.:

Crimped fittings

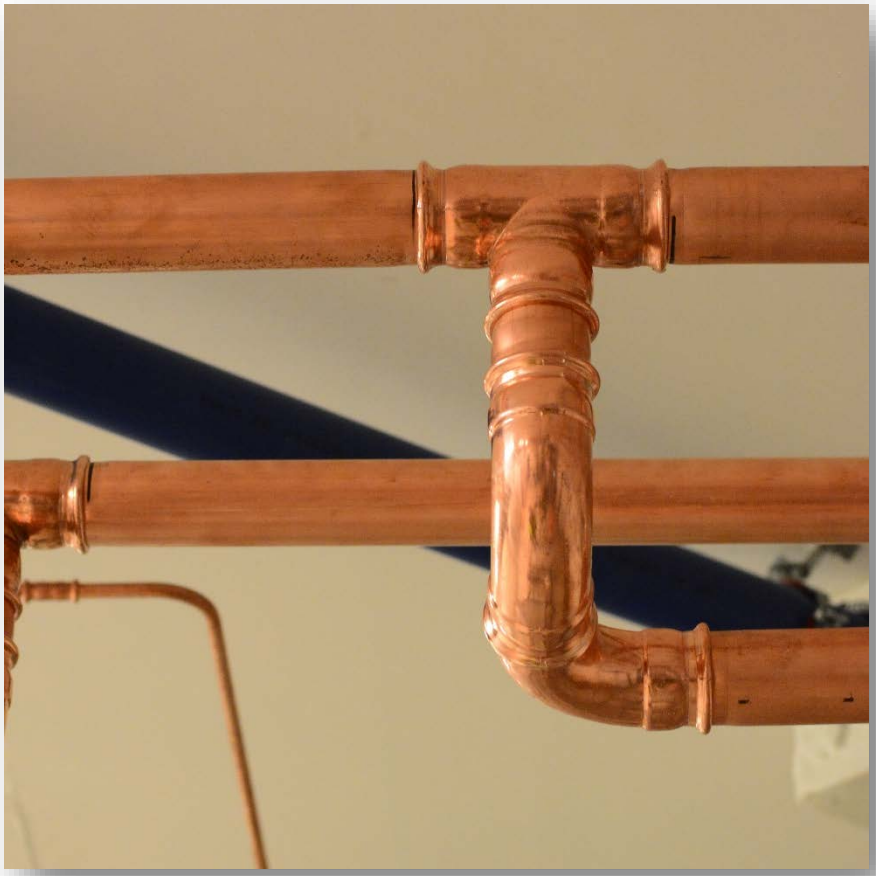

Mechanical systems – Air handler isolation

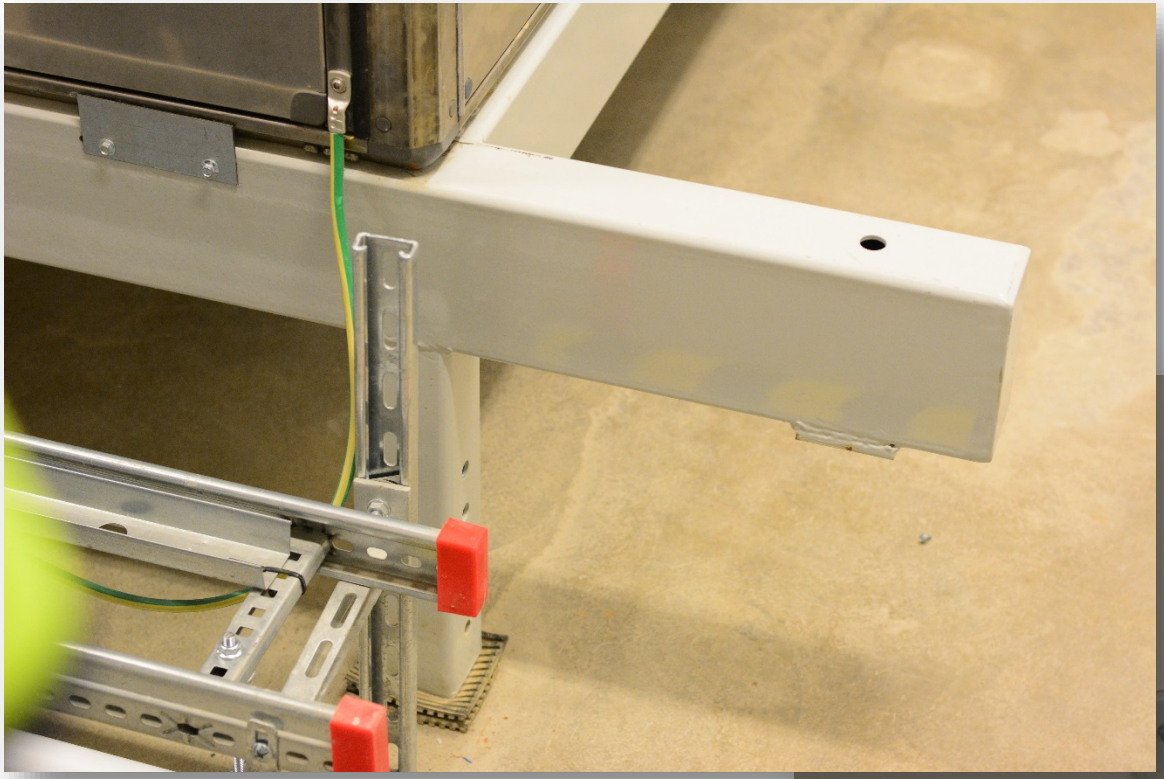

SR Tunnel and Magnets

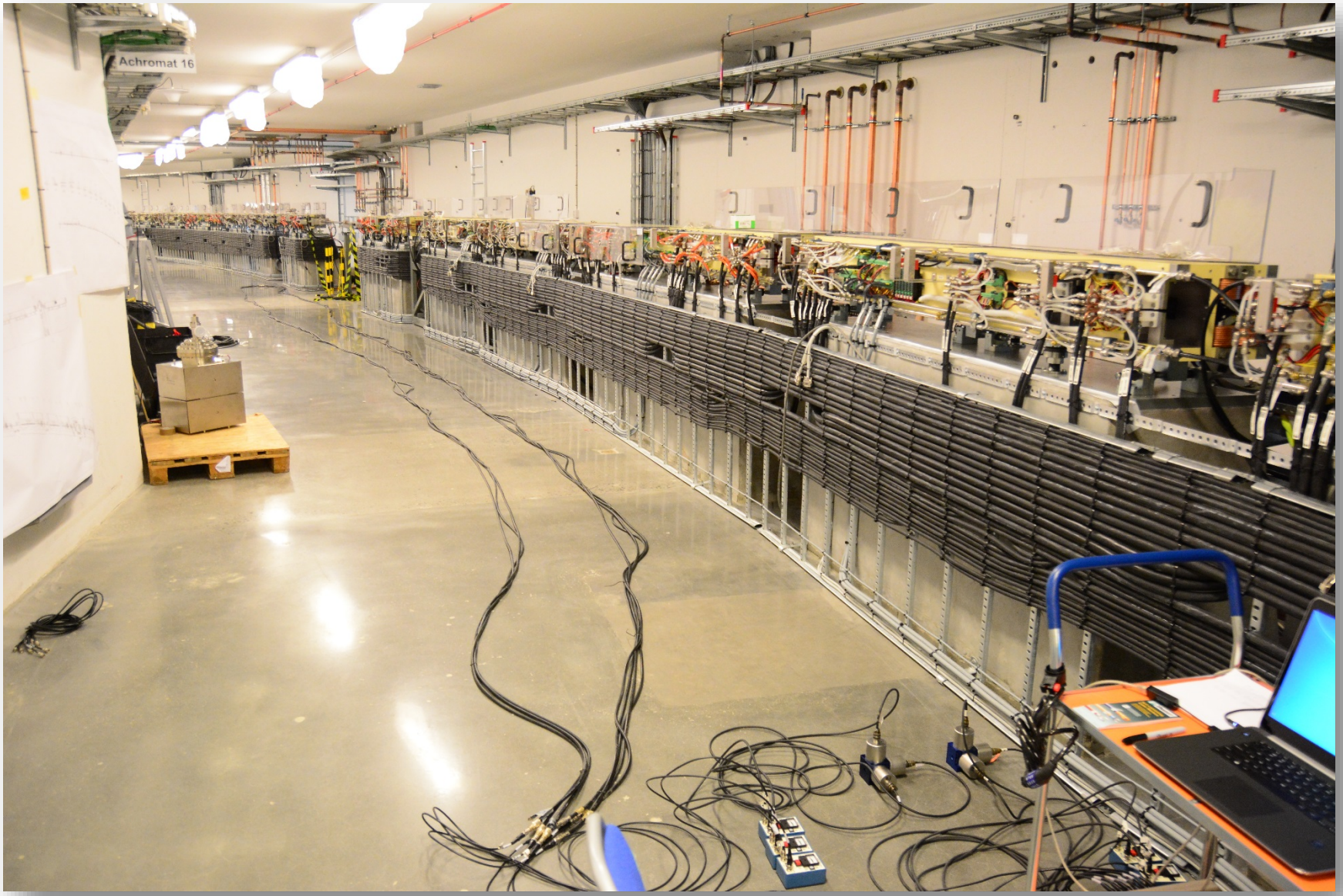

Magnet Supports

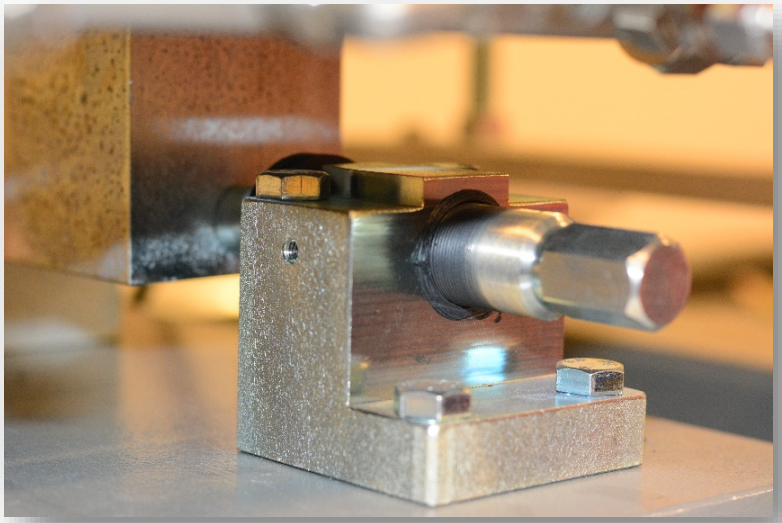

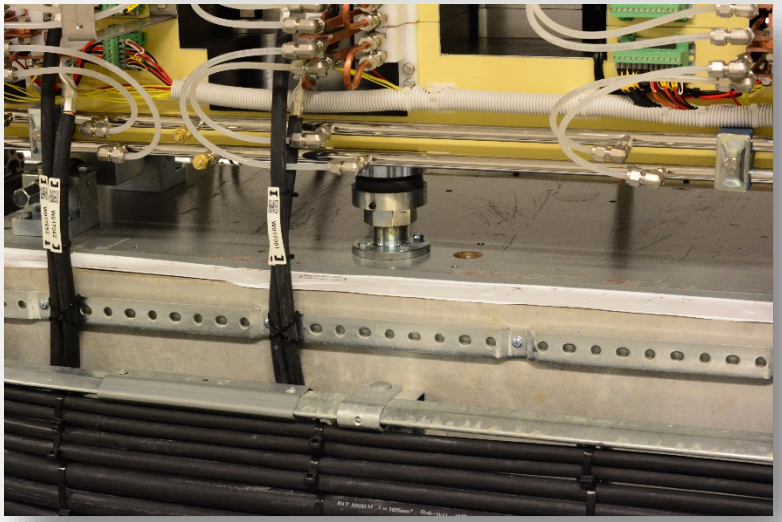

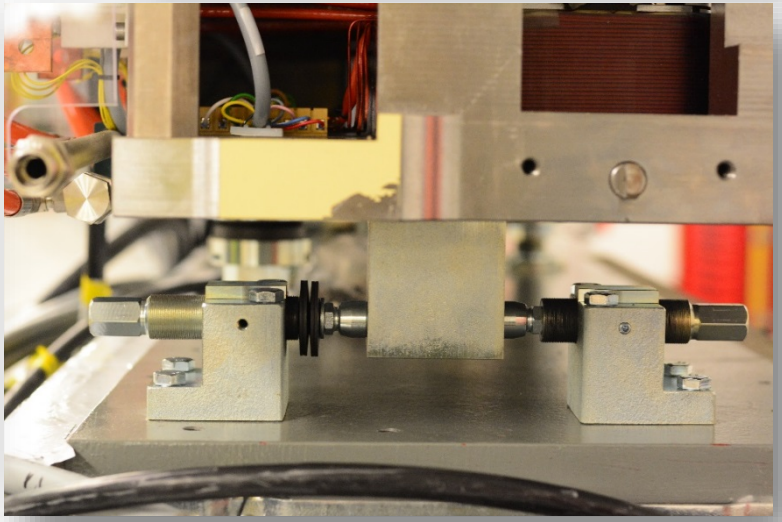

Supports – Assembly/straightening

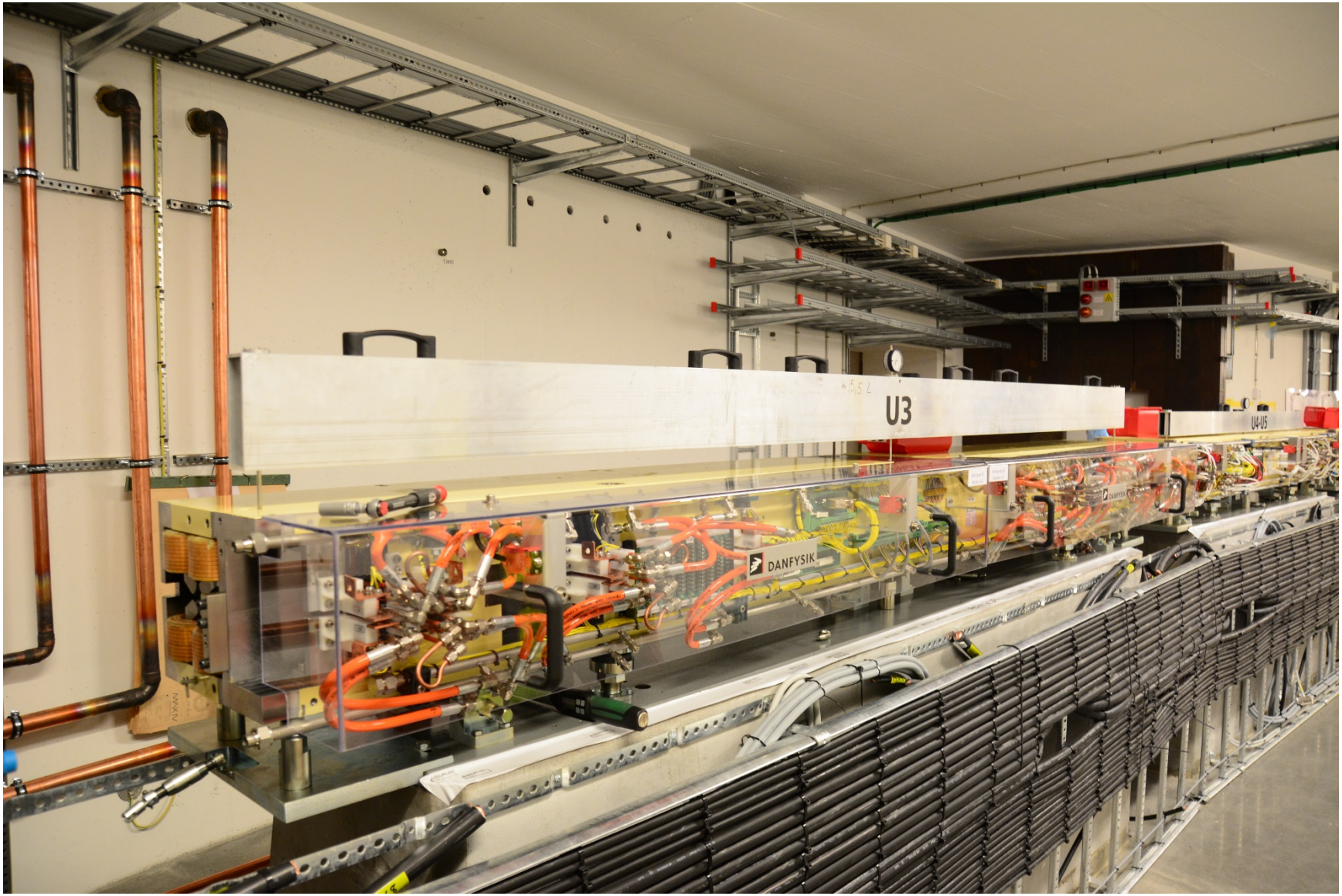

Supports – Assembly/straightening

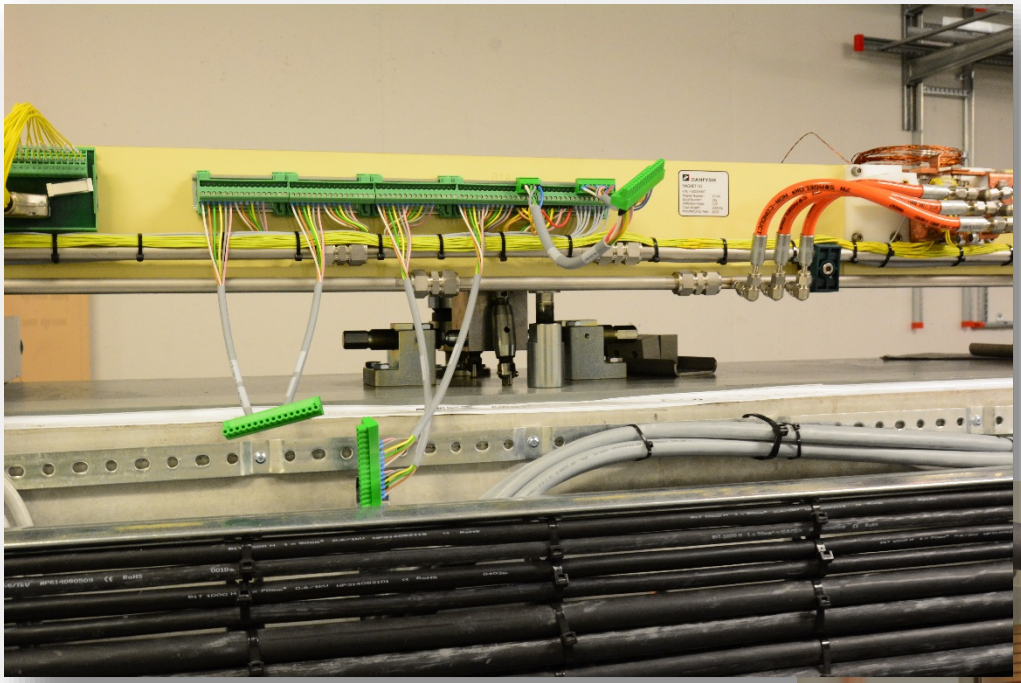

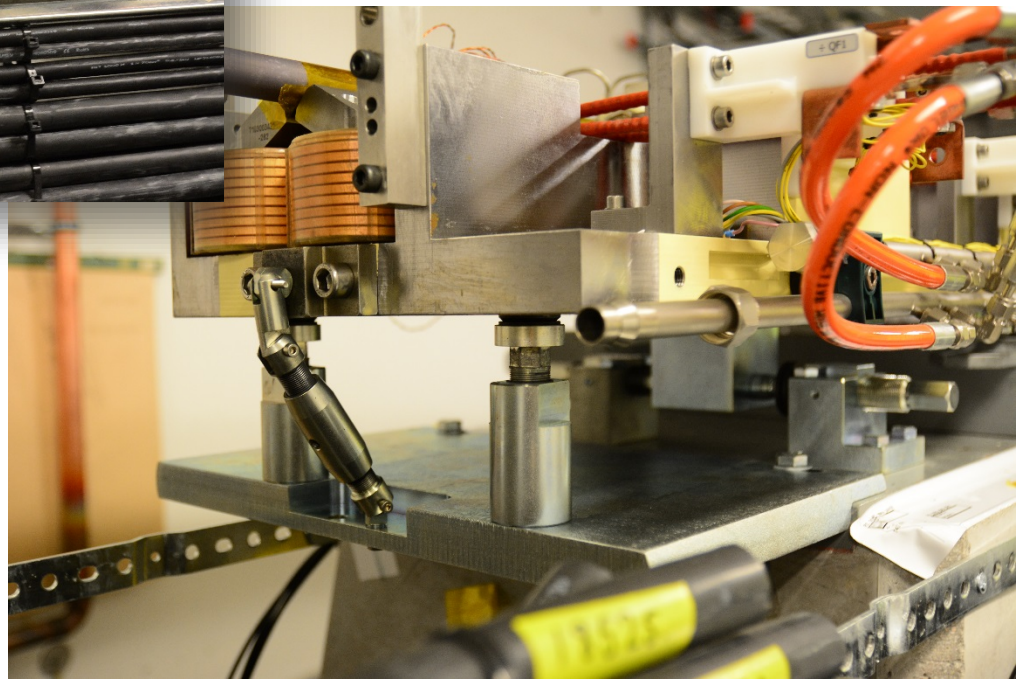

Supports – Assembly/straightening

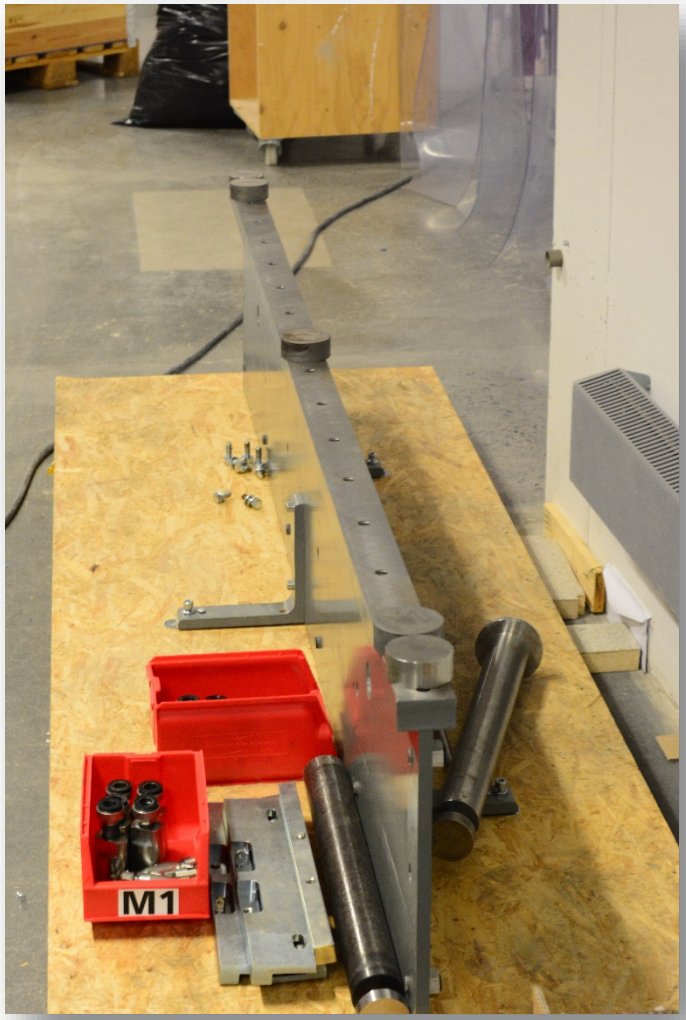

Support – Universally (or at least many places) used

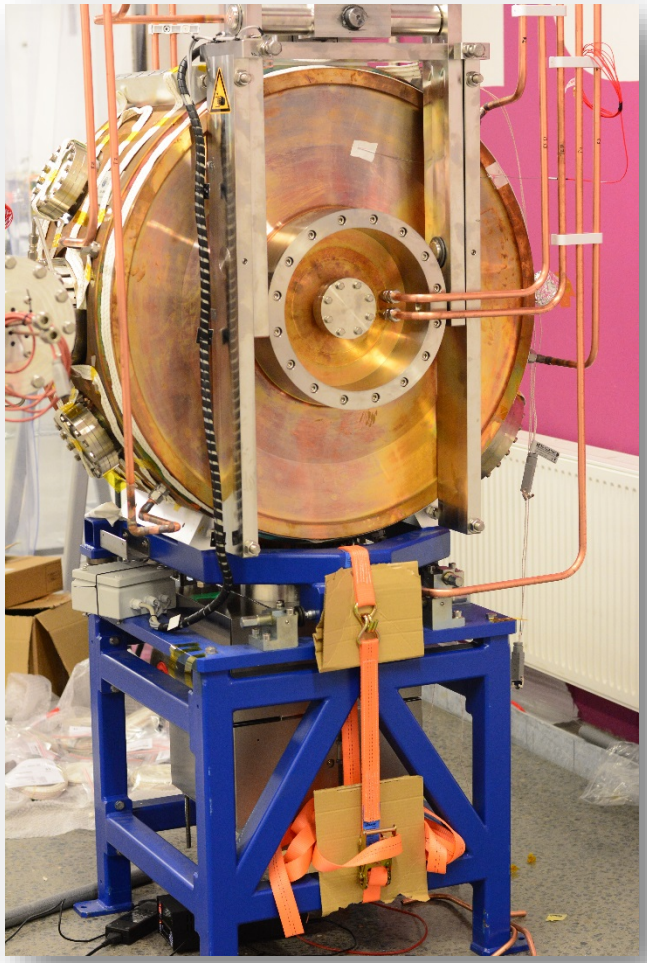

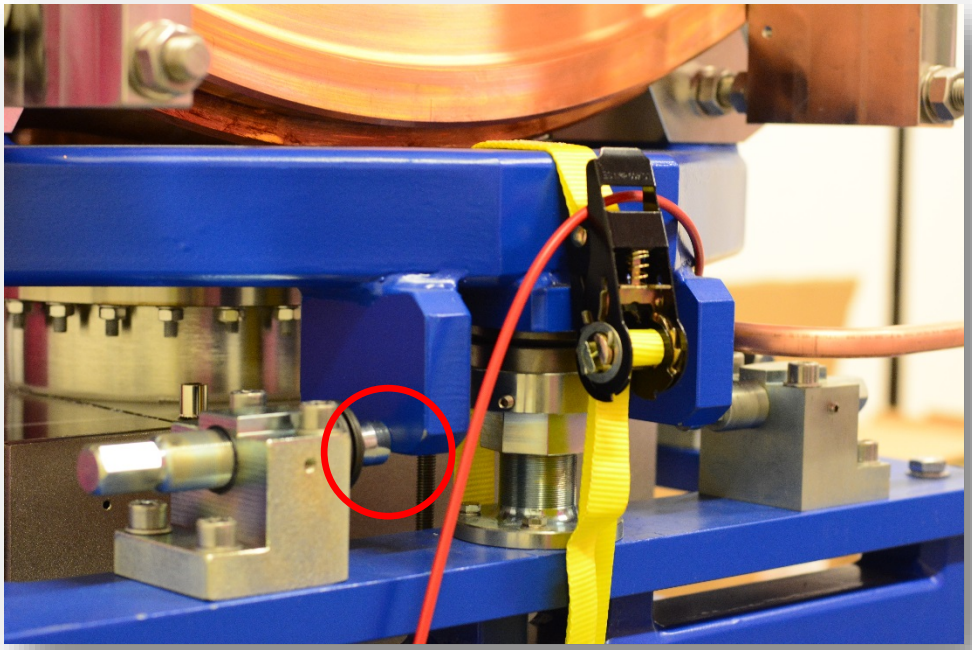

Magnet installation

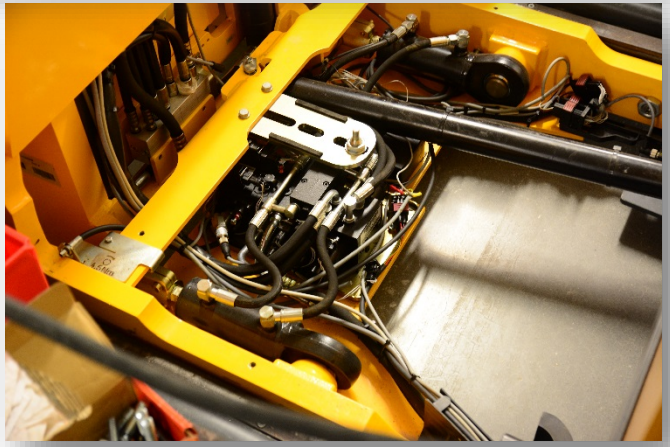

Magnets bottom half and vacuum chamber

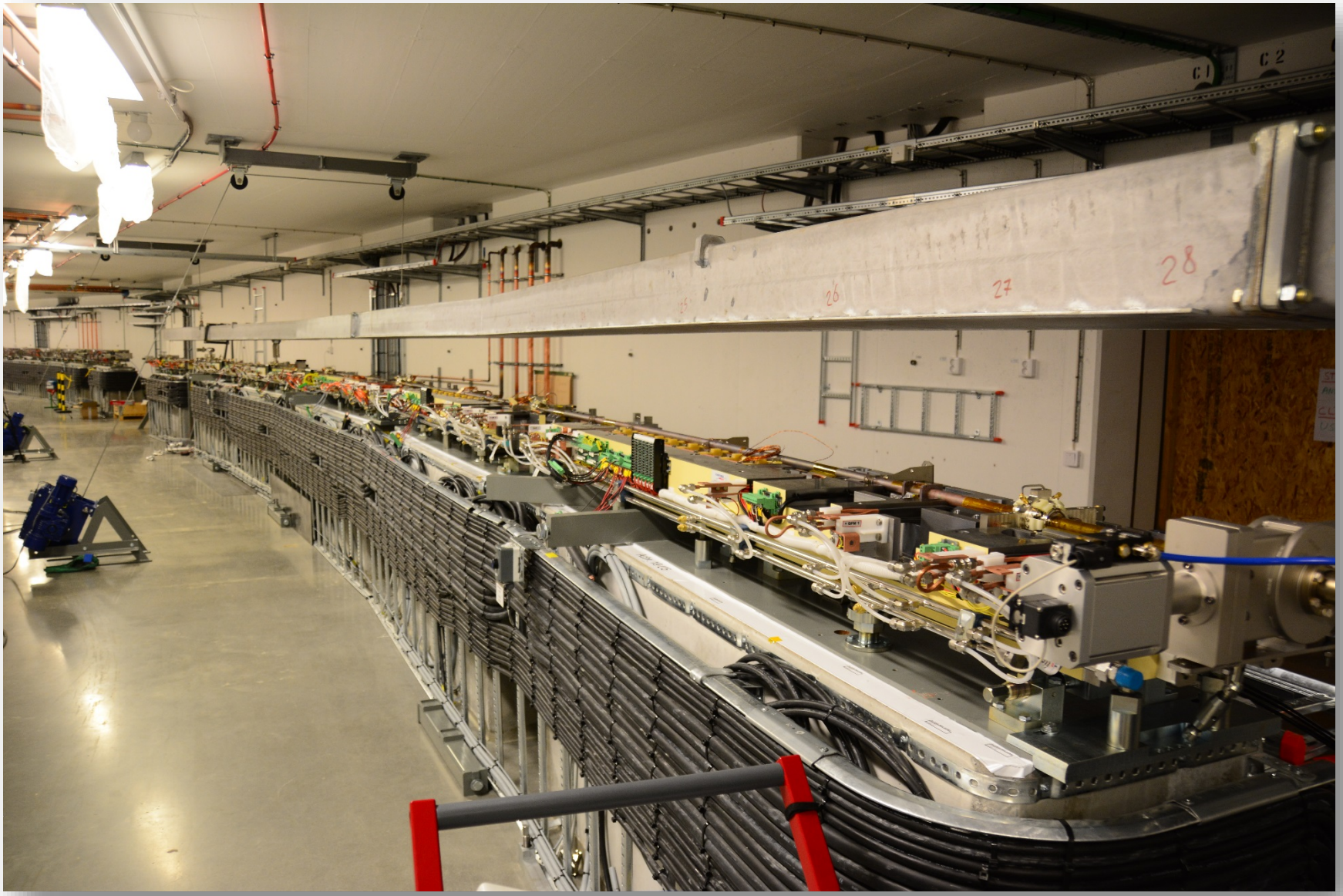

E-beam BPMs

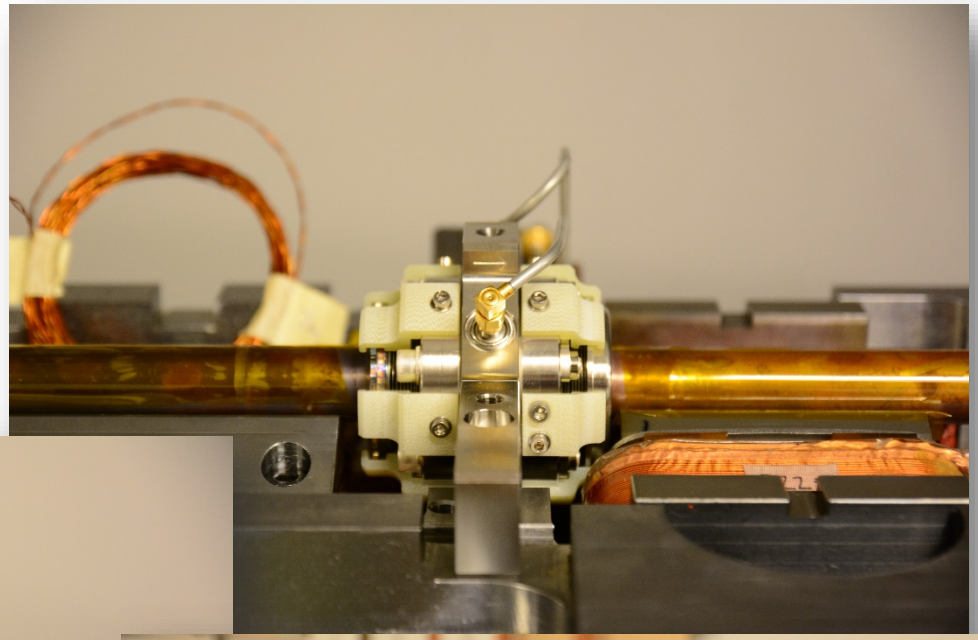

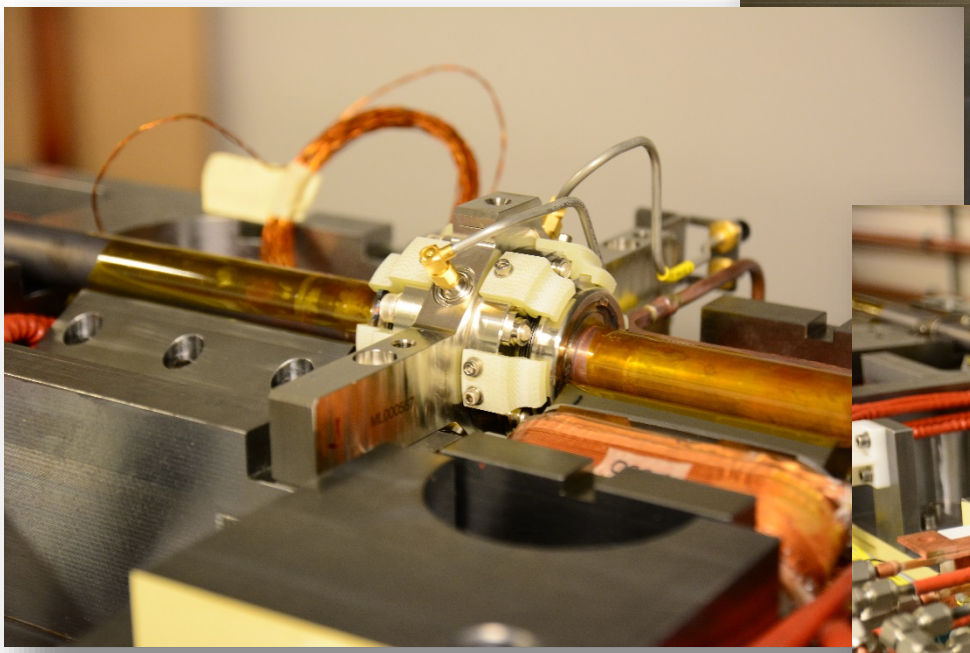

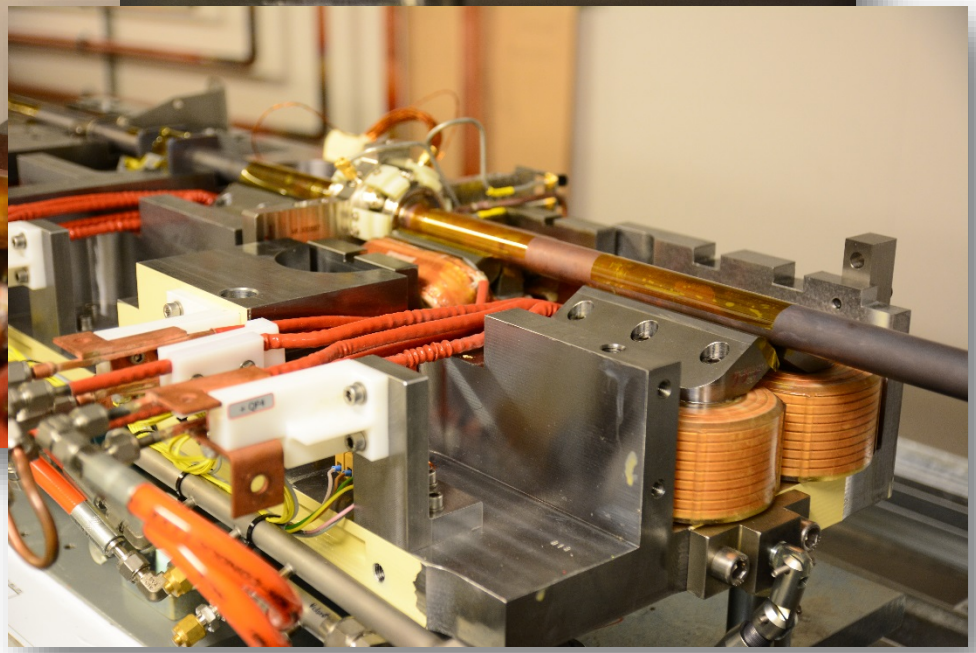

Vacuum chamber installation

Vacuum chamber installation

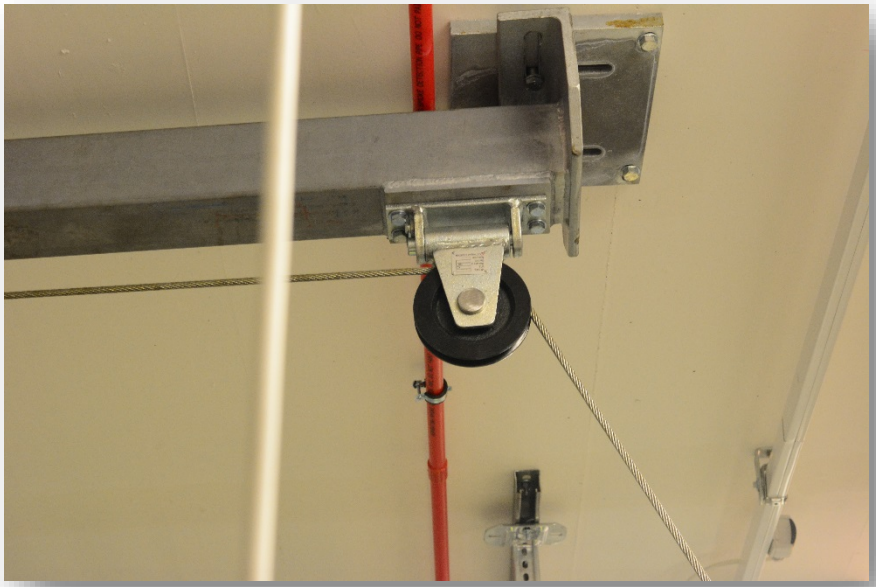

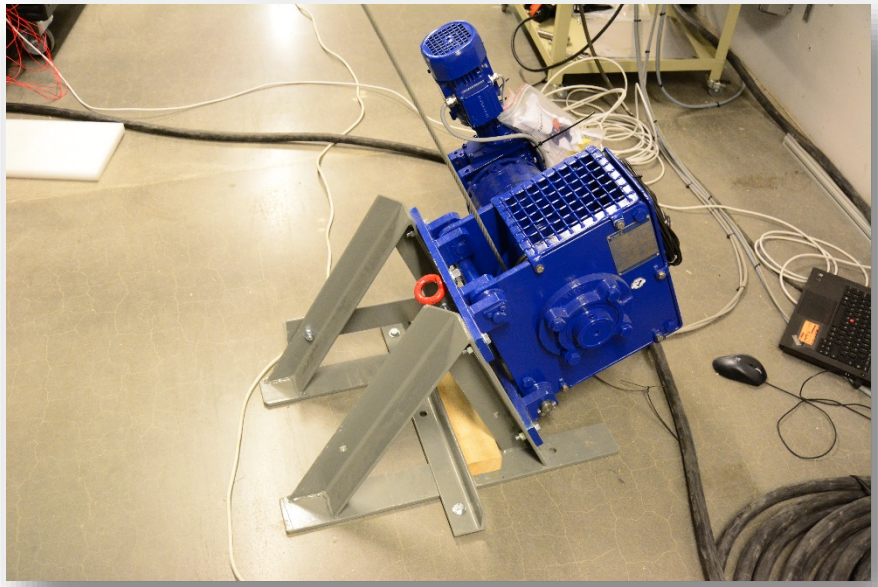

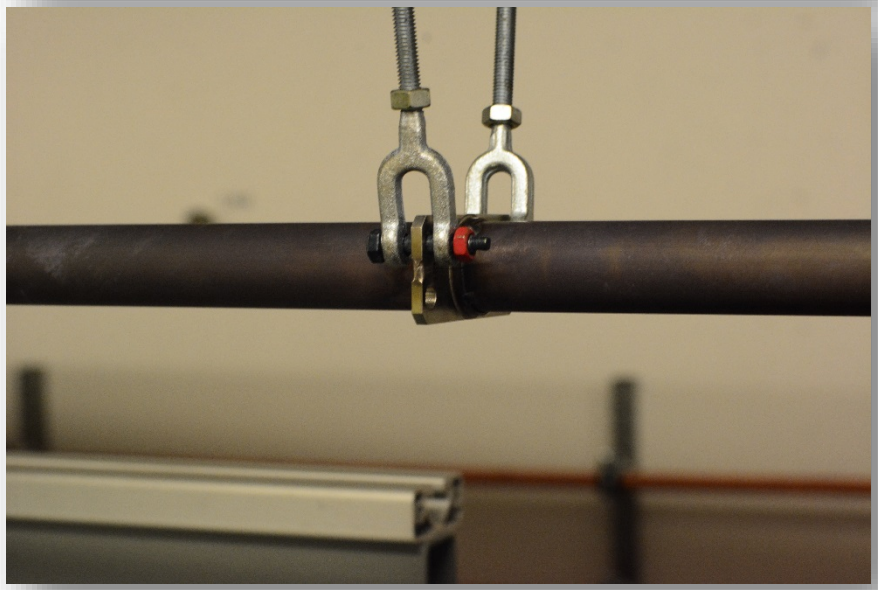

Vacuum chamber bake out

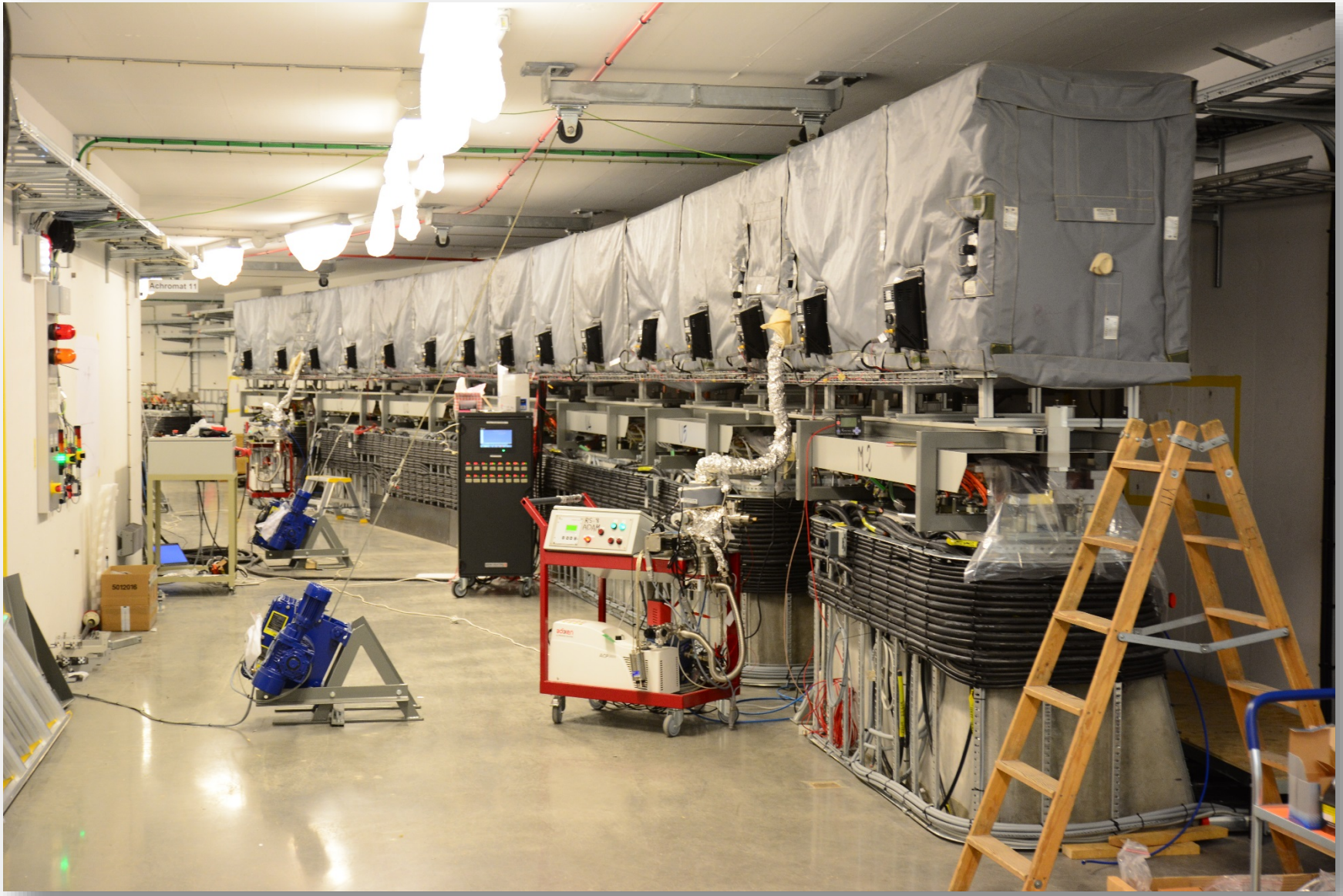

Shielding door air casters

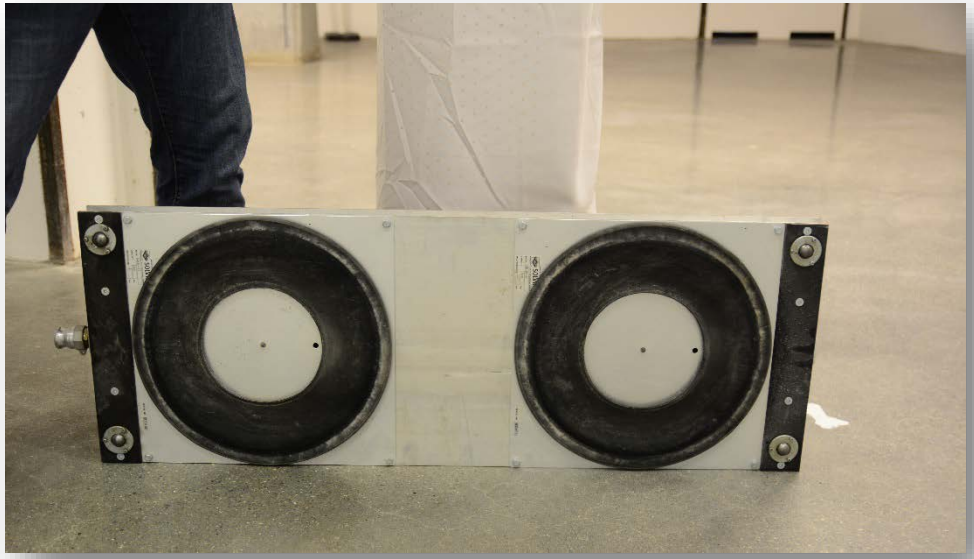

- Manufacturer: Solving
- Model: ME 15H-3.5
- Capacity: 3500 kg (7700 lb)
- Max pressure: 4.1 bar (60 psi)

The little differences…

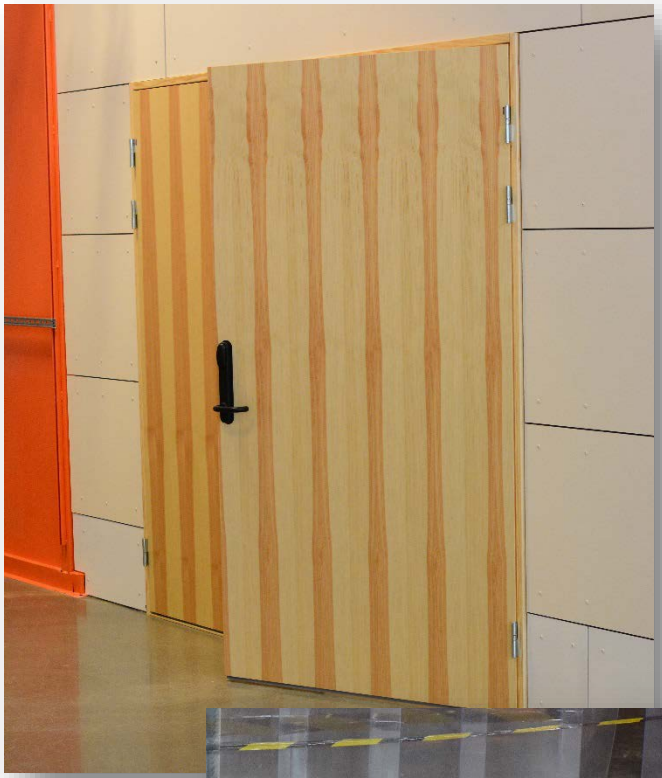

Part II: Vibration Measurements

Why do we care?

CDR Table 3.17

	X (rms) 1-100 Hz	Y (rms) 1-100 Hz	X (rms) 0.1-1000 Hz	Y (rms) 0.1-1000 Hz
u_{girder}	32 nm	40 nm	320 nm	400 nm
u_{quad}	13 nm	9 nm	130 nm	90 nm

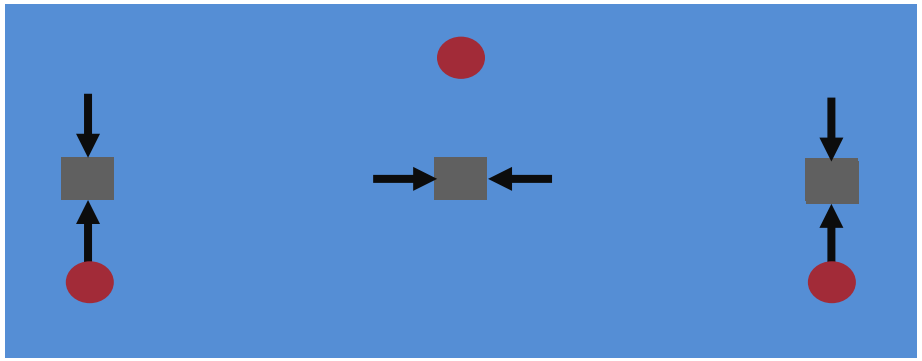

Vibration levels – MAX IV Compared to APS

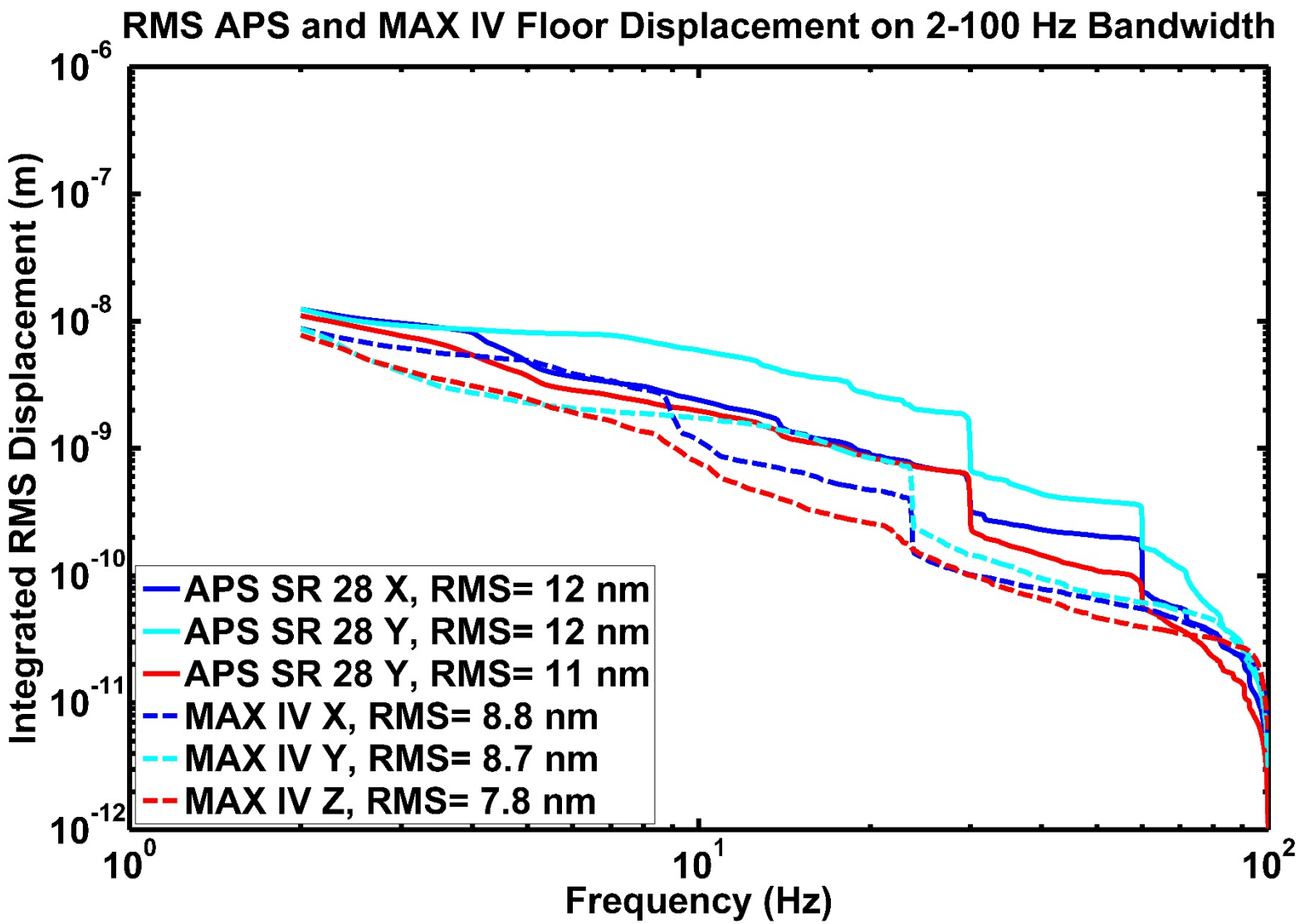

Vibration levels – Floor to Magnet

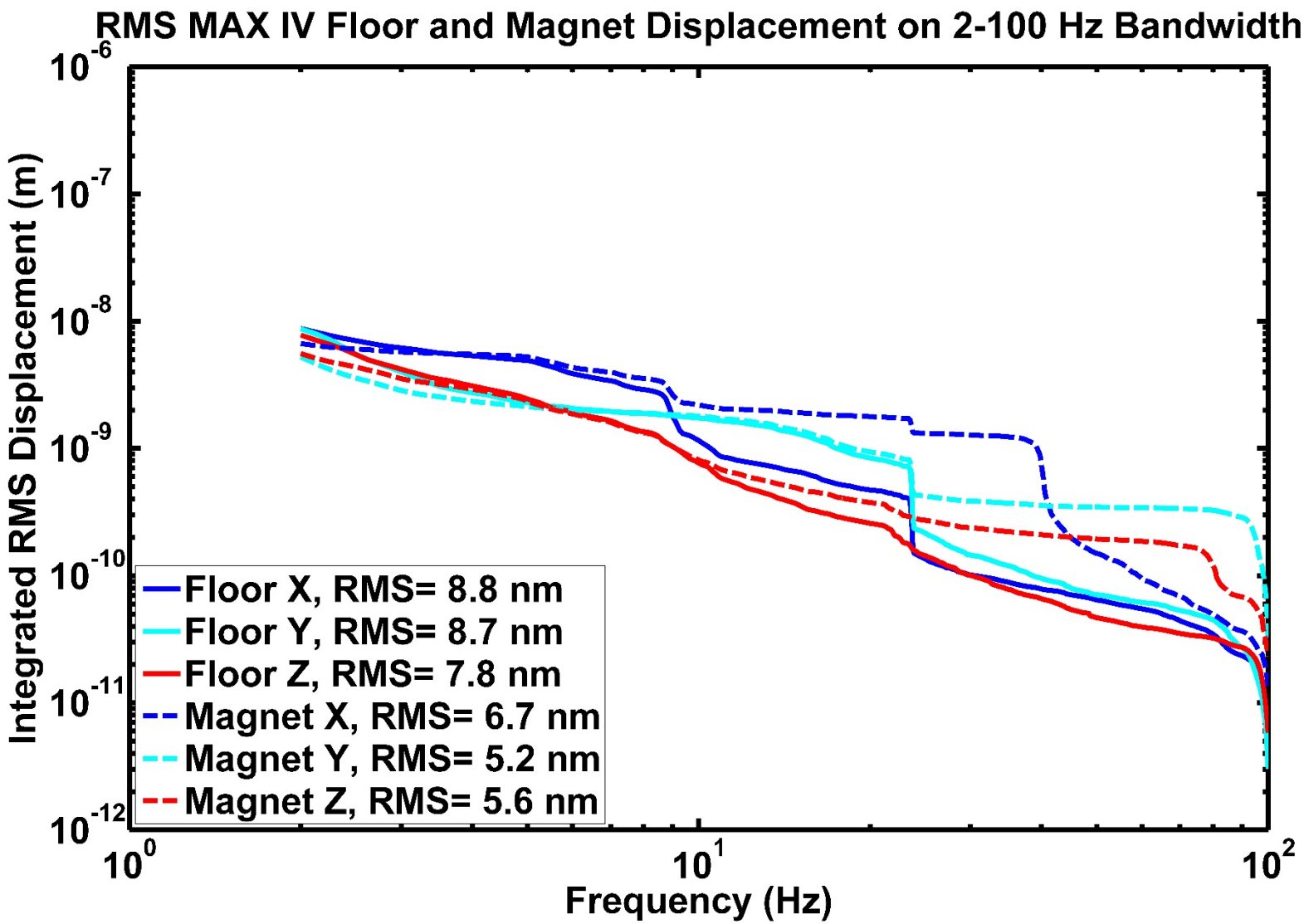

Experimental Modal Analysis – A20 U3

- Our intention was to obtain modal data for a MAX IV magnet in a variety of configurations
  - Standard configuration (three vertical screws, lateral and longitudinal pushers at 4 N*m)
  - Only three vertical screws
  - Standard configuration w\in-plane constraints tightened until spring washers collapsed
  - Standard configuration with an additional three supports with viscoelastic material
- Experimental modal analysis can be used to obtain:
  - natural frequencies,
  - damping factors,
  - mode shapes,
  - modal stiffnesses, and
  - modal masses.
- This is useful for
  - Comparing to numerical (FEA) modal analysis
  - Obtaining damping values that can be used in numerical random vibration analyses
  - Extracting physical stiffness values that could be used in numerical modal analysis

Modal analysis – How did we do it?

- Measured frequency response functions (FRF) at many points
- Single-input, multiple output
- One impact, three output measurements at each point
- Modal analysis software is then used to curve fit the FRFs to obtain the modal parameters
- Modal analysis assumes:
  - Linearity
  - Time invariance
  - Reciprocity
  - Observability (Sufficient data are measured)

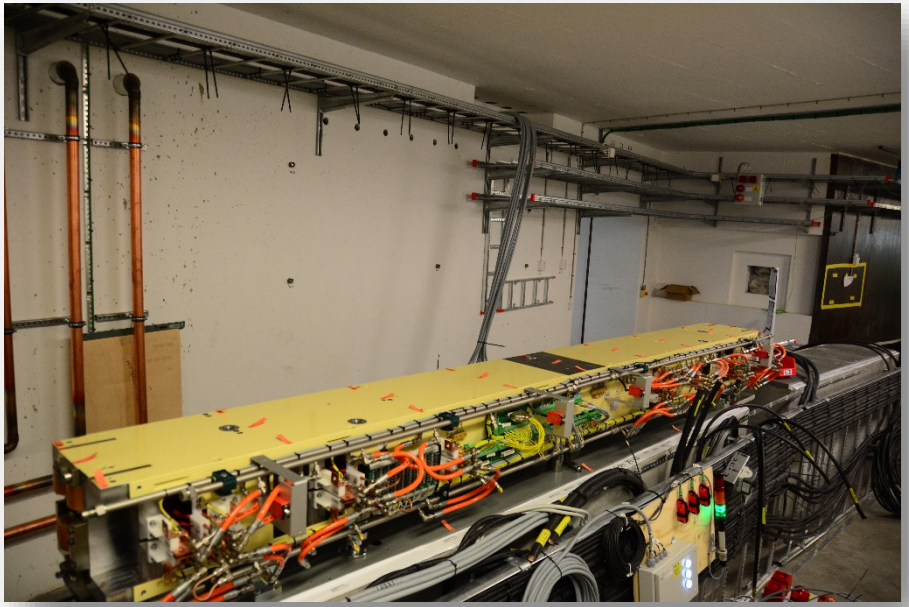

Modal analysis – The four cases

1. Standard configuration
   - Three vertical screws with lateral and longitudinal constraints (pushers)
   - Purpose: to determine baseline data
2. Three vertical screws
   - Only the vertical screws are present, no in-plane constraint is used
   - Purpose: to investigate the effect of the lateral constraints on behavior
3. Fully tightened in-plane constraints
   - The lateral and longitudinal constraints were tightened until the spring washers collapsed
   - Purpose: to investigate the effect of in-plane constraint force (friction, etc…)
4. Dynamically over constrained
   - Similar to standard configuration but with the addition of three more vertical supports that *only contact the magnet through a viscoelastic layer*. This layer is statically compliant and stiff at high(er) frequency.
   - Purpose: to investigate the possibility of adding stiffness but keeping things statically kinematic

Case 1 – Standard configuration 1st mode

39 Hz first mode

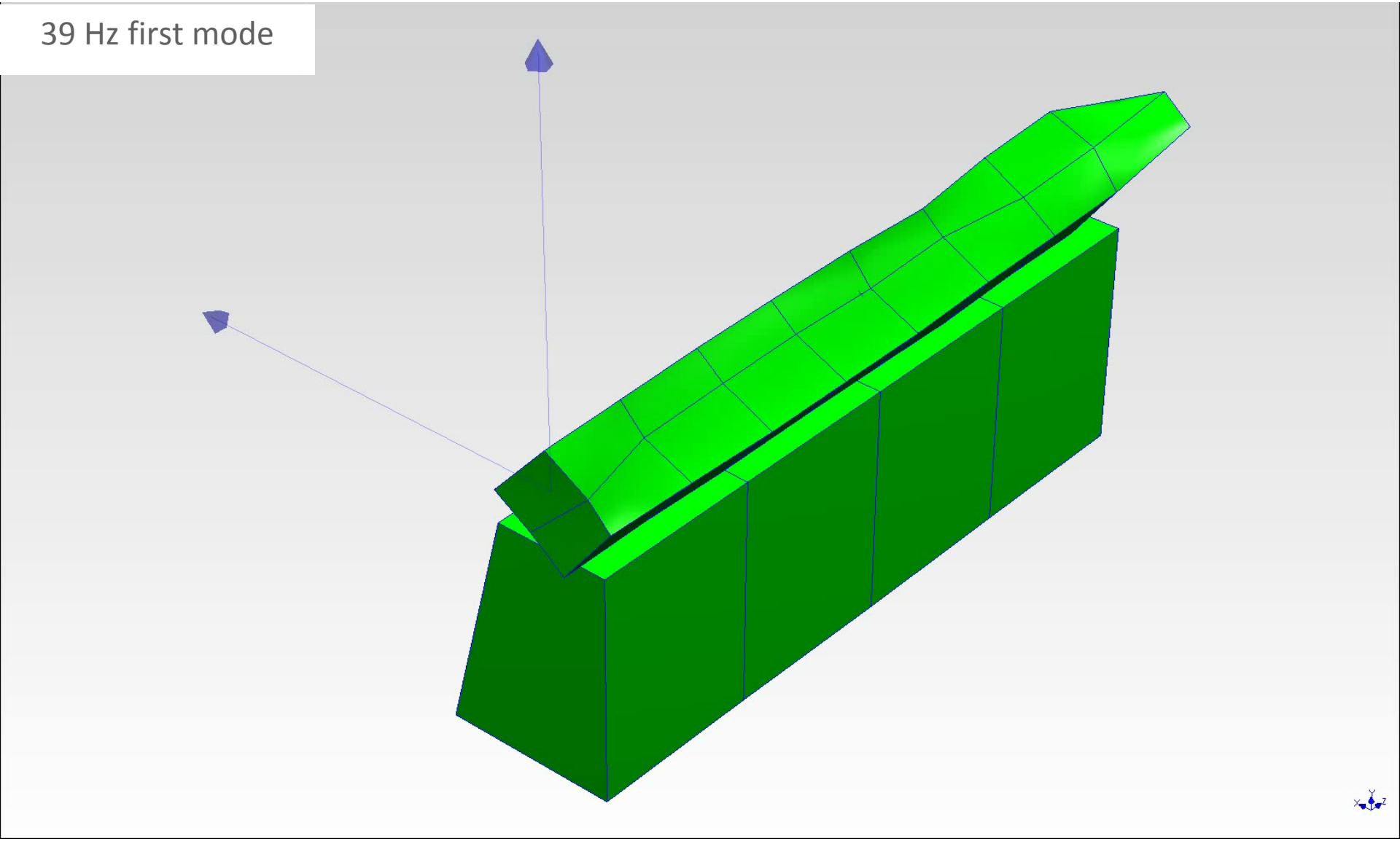

Case 1 – Standard configuration 2nd mode

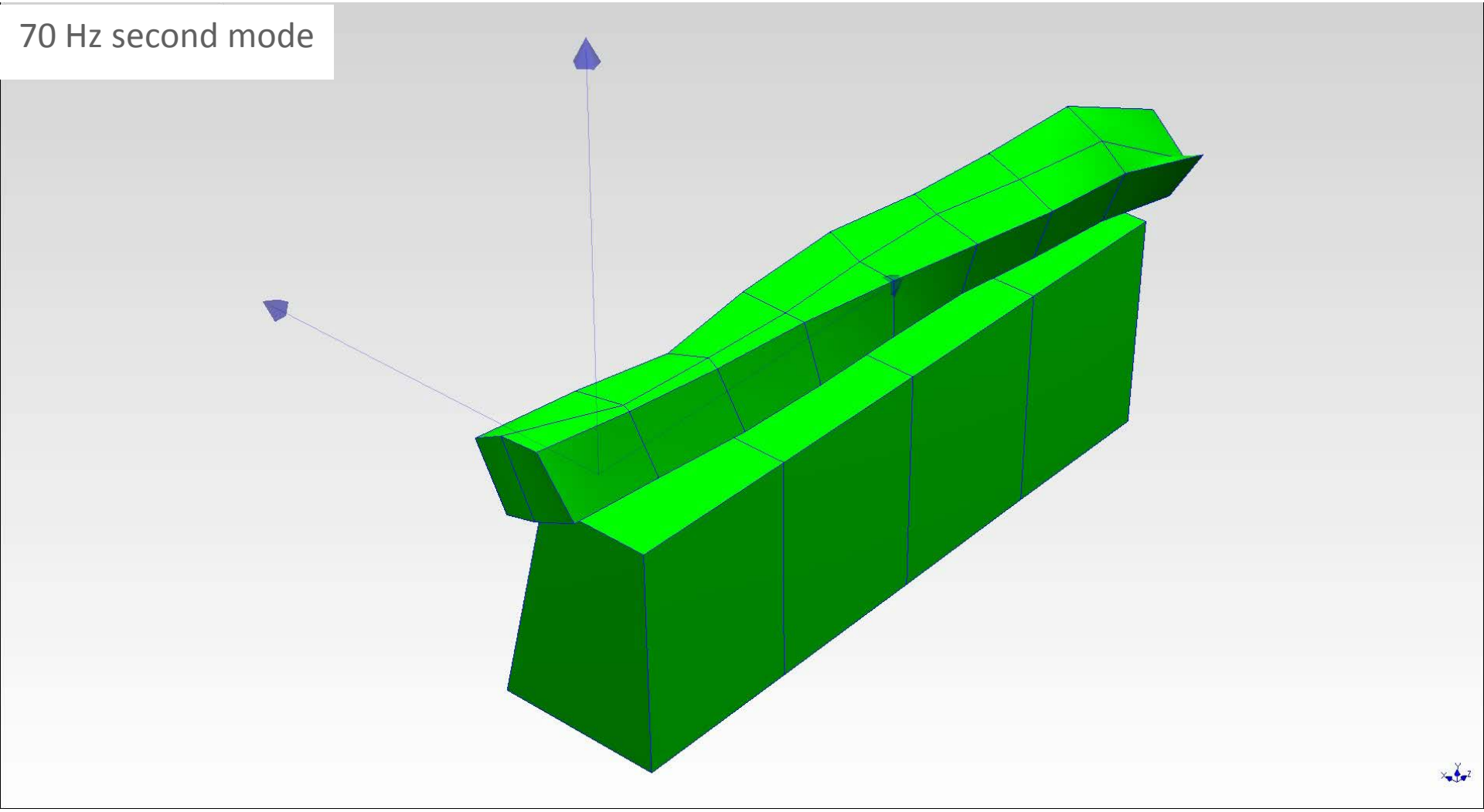

Case 2 – Three vertical screws 1st mode

33 Hz first mode

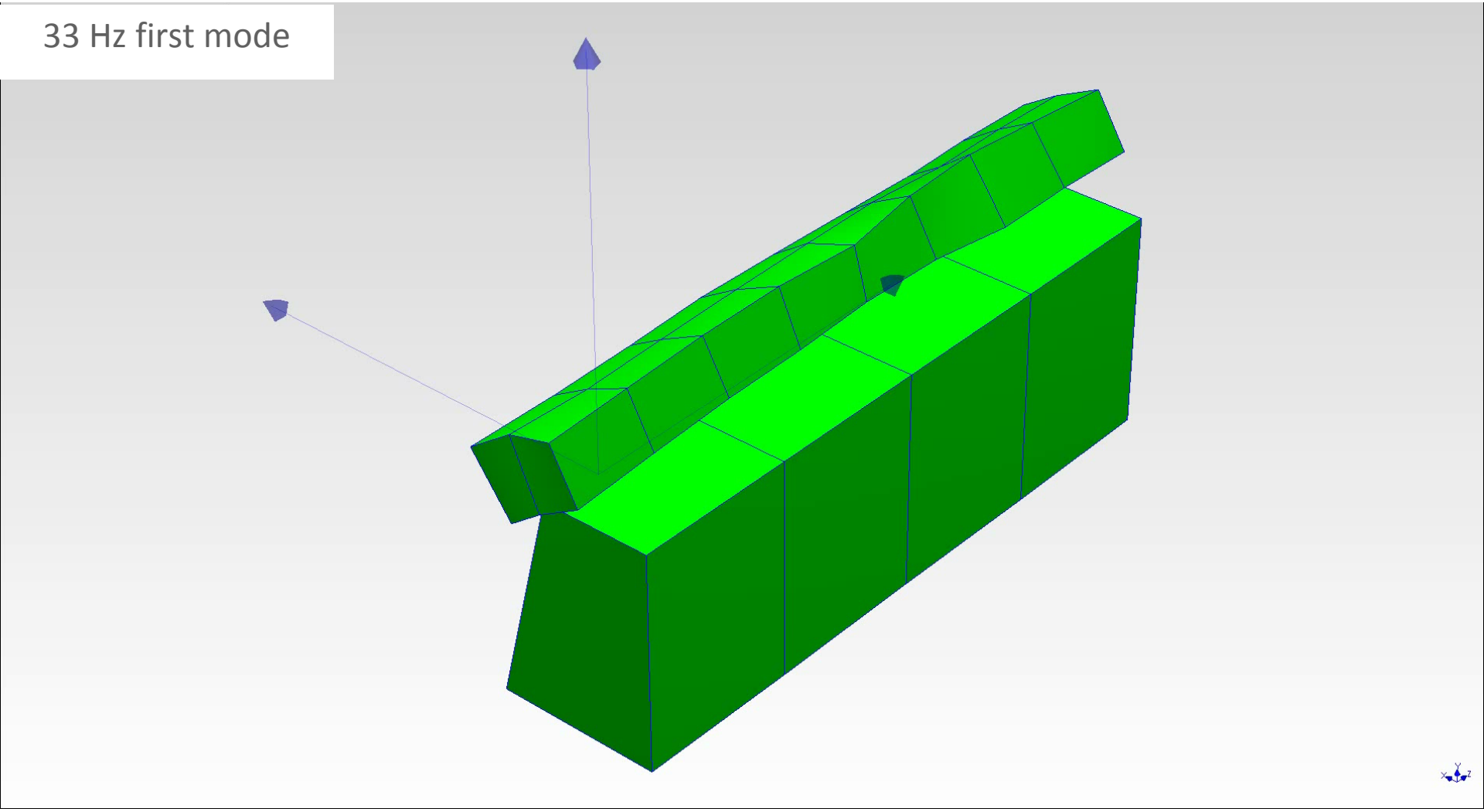

Case 2 – Three vertical screws 5th mode

111 Hz fifth mode (first deformation mode)

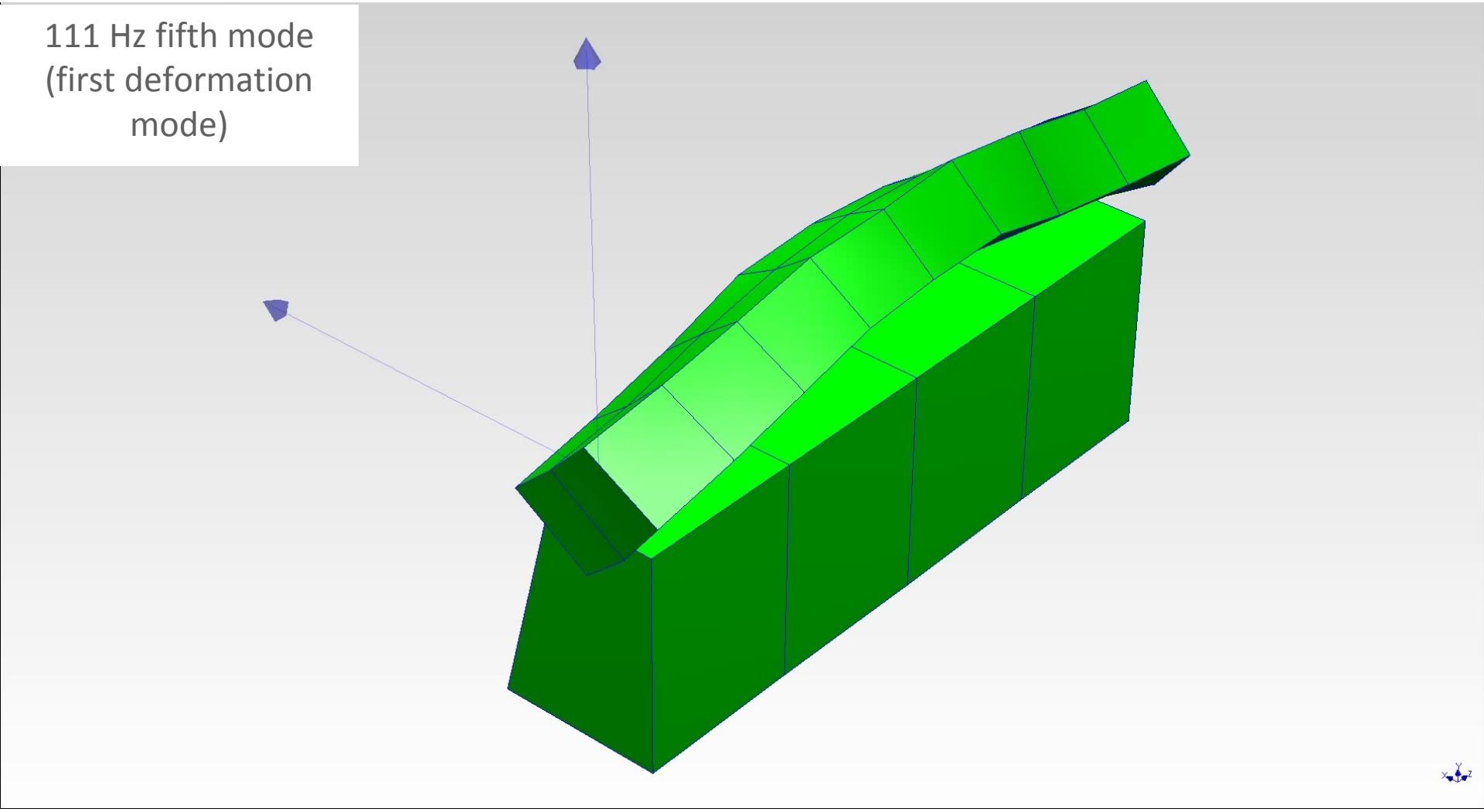

Part III: Reality vs. Fantasy

What do we hope to do with modeling and simulation?

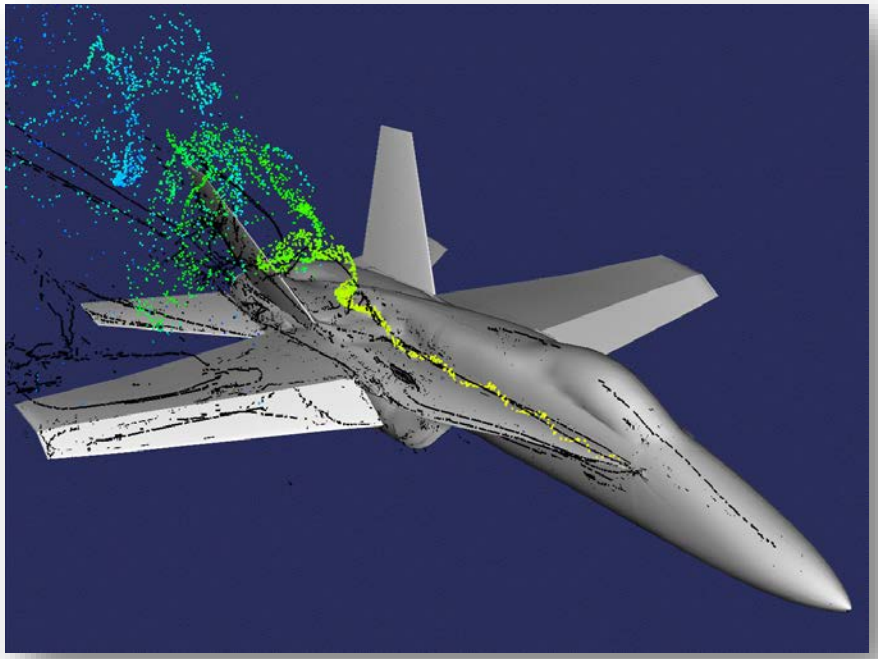

Use analysis to accurately predict performance.

Why can this be difficult?

- Behavior may be dependent upon characteristics that are not easily determined
- Magnet support deflection requirement is:
  - Dependent mostly upon material properties and geometry,
  - Both of which can be well characterized.
  - Analysis can be good predictor of performance.
- Magnet support first natural frequency requirement is:
  - Dependent upon material properties and geometry, but
  - Also dependent upon interfaces and sub-structure behavior.
  - These can be hard to characterize.
  - Analysis can be an inconsistent and/or unreliable predictor of performance

MAX IV – U3 Magnet (largest in sector)

First simulated mode: 55 Hz

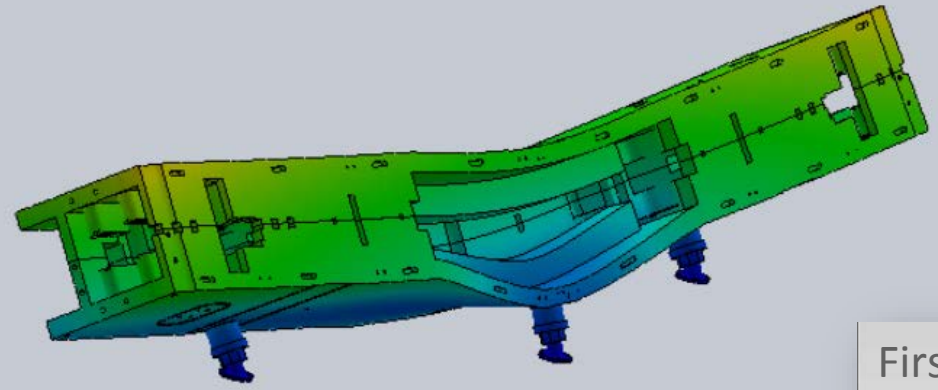

First measured mode: 39 Hz

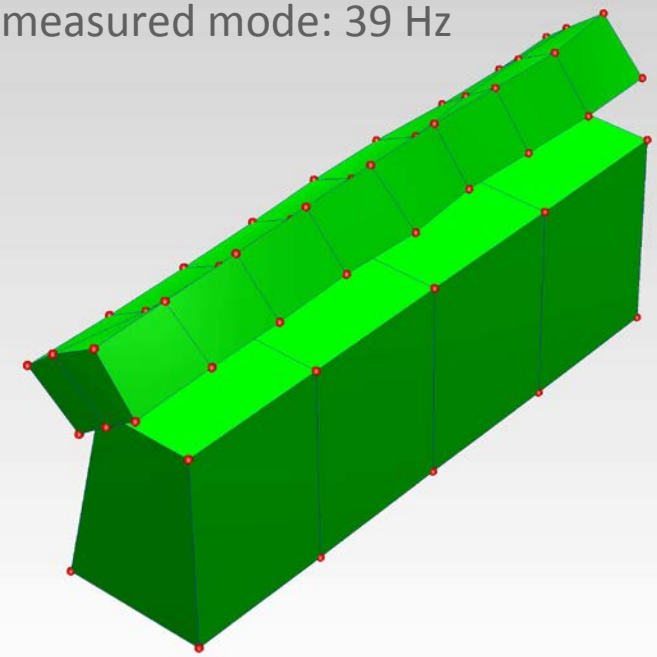

- Significant mass was neglected
- Insufficient modeling of supports

Simulation results from Brian N. Jensen and Karl Åhnberg.

NSLS II – Empirical adjustment of model

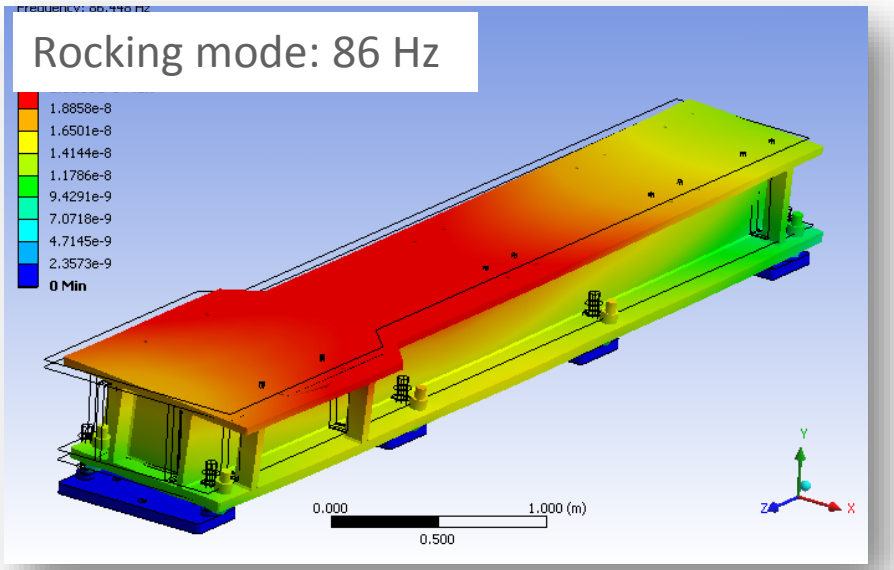

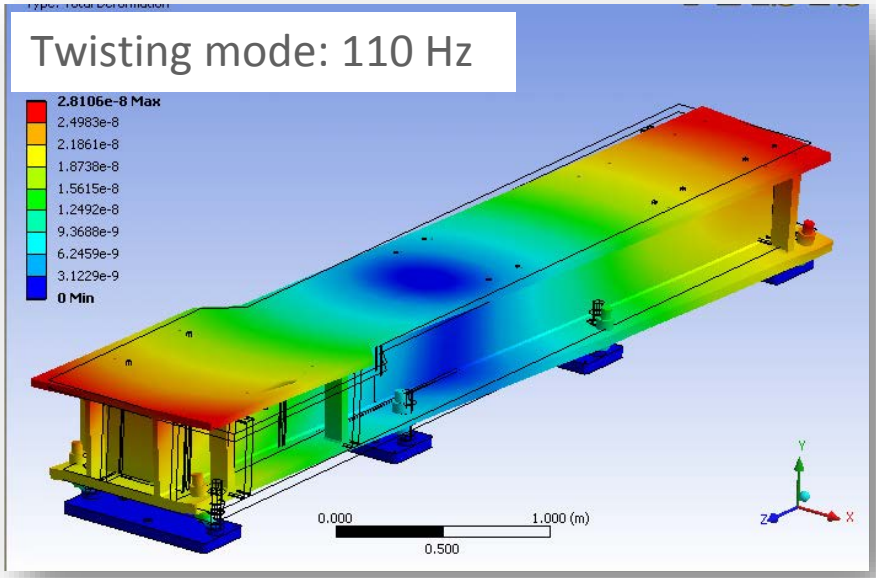

- Testing revealed that the measurement did not match analysis
- The finite element model was adjusted *a posteriori* to obtain a match
- Young's modulus of threaded support reduced by a factor of 10
- This calibrated model was then used to predict behavior of final design

V. Ravindranath et. al., Vibration Stability of NSLS II Girder-Magnet Assembly, Presented at MEDSI 2008

MAX IV – experiment vs. our simulation

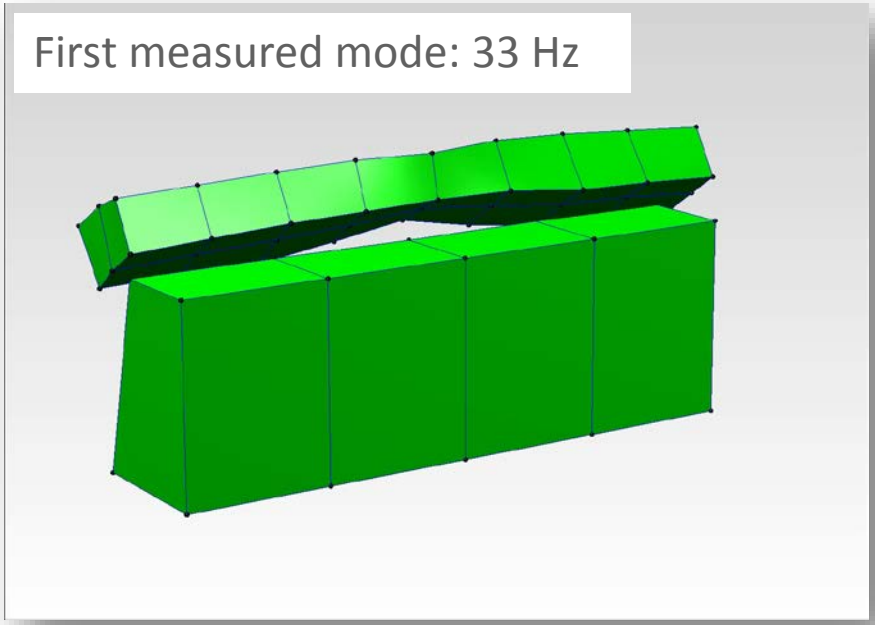

- MAX IV supplied us with the full CAD model of the U3 magnet
- Simplified model, mass corrected (1600 kg)
- We conducted our own finite element modal analysis (three points, no in-plane constraint), 33% off of measured result

MAX IV – What can be done to make match?

- First, extract stiffness from experimental measurement
- $f = \frac{1}{2\pi}\sqrt{\frac{K_T}{m}}$ where f is natural frequency, K_T is total stiffness, and m is total mass of magnets
- Plugging in 1600 kg and 33 Hz, $K_T = 69\text{E}6$ N/m, $\frac{K_T}{3} = K_m =$ 23E6 N/m
- Assume that supports behave as cantilevers (linear, transverse stiffness), then what is diameter post for stiffness to be K_m?

$K_m = \frac{3E\frac{\pi}{4}r^4}{L^3}$, where $K_m = 23$ N/m, *E* = 205E9 Pa, *L*= .104 m

r = 15E-3 m or *d* = 30E-3 m

MAX IV – First mode with revised supports

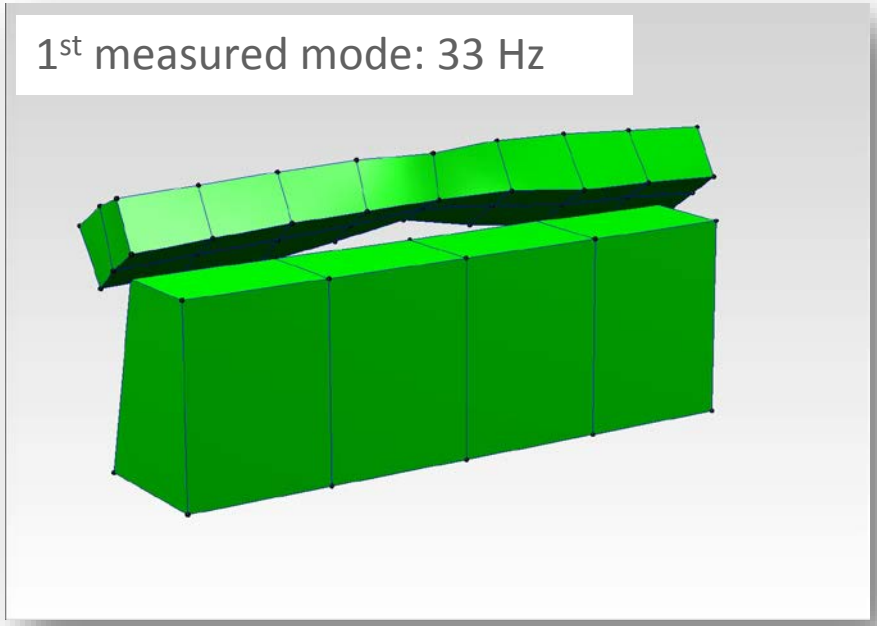

- Model reanalyzed with 30 mm diameter posts (23 N/m stiffness)
- 6.0% difference

MAX IV – Second mode with revised supports

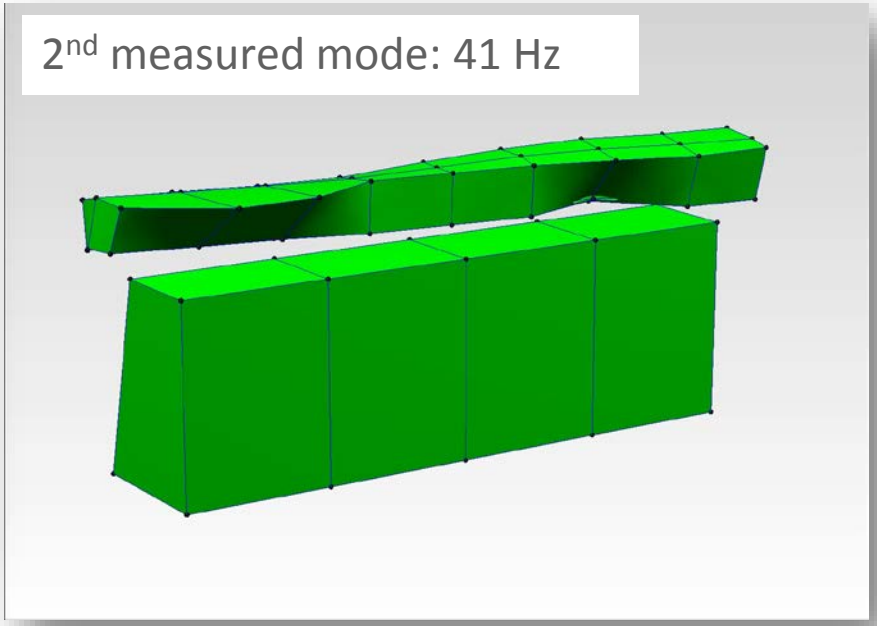

7.3% difference

MAX IV – Third mode with revised supports

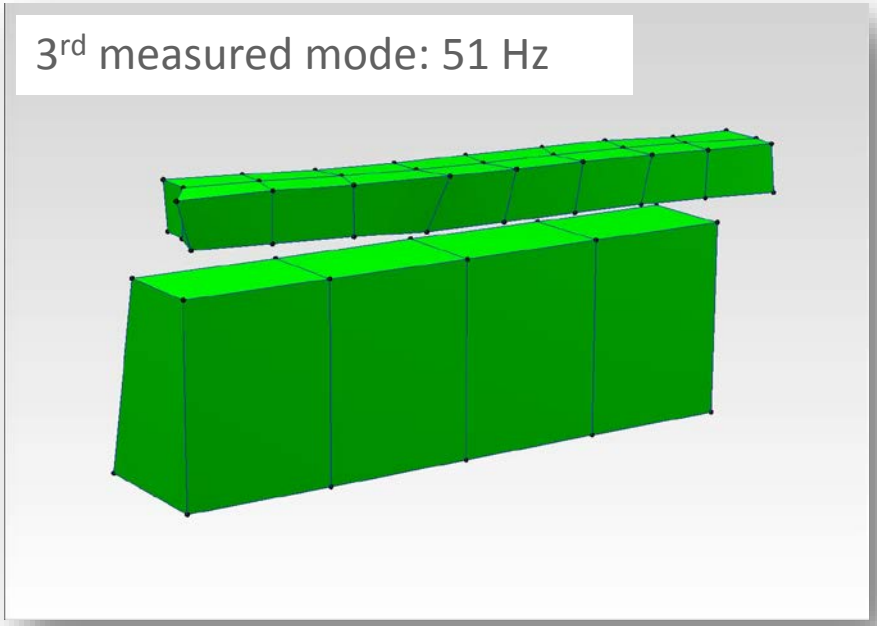

5.9% difference

Yes…but that's after the fact…how about a basis?

- Can we build a geometrically accurate model of the support and extract meaningful stiffness numbers?
- Half model, fixed base, all interfaces are bonded
- Apply 2 loads: 1) vertical 2162 N and 2) transverse 10 N (
- Determine stiffnesses from slope of load deflection curve

- Stiffnesses
  - Vertical: 1.4E9 N/m (4.3 N/m analytical k = AE/L)
  - Transverse: 25E6 N/m (23E6 N/m from experiment)
  - 8.7% difference

- Working on model with frictional interfaces

- Result to be used as discrete stiffness in modal model

Summary

- MAX IV is a useful example to inform APS-U design
- The MAX IV magnets and supports are an innovative design
- MAX IV vibration levels are on average, 28% less than APS on 2-100 Hz
- Modal analysis can be a good tool to understand system behavior and validate numerical analysis
- We are developing an analysis procedure that can predict behavior

Acknowledgements

Jeff Collins, Jeremy Nudell, Herman Cease, Zunping Liu, Rich Hrebic, Mark Jaski, Jie Liu, and Brian Jensen (MAX IV)