LS-74

August 5, 1986

CORNELL UNDULATOR/SUMMARY OF DISCUSSIONS

(August 4, 1986 meeting at Argonne National Laboratory)

Gopal Shenoy and Jim Viccaro

A. Undulator Design from ANL

Based on an earlier statement made by CESR (during the meeting in March '86 at Cornell) that the ring energy can be 6-GeV and the minimum gap can be 0.9 cm, we performed design calculations for the Cornell undulator. These are presented in Figs. 1-6 and summarized below:

1. Low period undulator (2.2 cm) produces 14 keV radiation in the first harmonic, but has a limited tunability (Fig. 1).

2. An undulator with longer period (3.4 cm) has larger range of tunability (3.0-8.8 keV) in the first harmonic (Fig. 1).

3. The K values, which determine the source brightness, are small (~ 0.5) for the 2.2 cm undulator. The K values are between 2.3 and 0.5 for the 3.4 undulator over the energy range from 3 keV to 8.8 keV, respectively (Fig. 2).

4. Based on a zero-emittance calculation (single-particle), the third harmonics from the 3.4 cm undulator in the high energy range (9 keV to 12.5 keV and 14 keV to 20 keV) has more brilliance (or flux) than the 2.2 cm device (Fig. 2 and 3). In a narrow range (from 12.5 keV to 14 keV), the first harmonic of 2.2 cm device is more intense (1 to 1.5 times) than the third harmonic of the 3.4 cm device.

5. In Fig. 4, the on-axis brilliance is presented for the two devices over the photon energies, calculated using a full integration of Lienard-Wiechert potential over the undulator trajectory of the electron and including the finite size of the electron source. The absolute numbers for the first harmonic brilliance in these calculations are lower than those in the zero-emittance calculations (Fig. 3). This is not a surprise since with non-zero emittance, one has even harmonic with considerable radiated intensity. In addition, the third harmonic of the 3.4 cm undulator is more intense than the first harmonic of the 2.2 cm device over the entire energy range of interest.

6. All the above clearly emphasizes that a long period (~ 3.4 cm) device will be more useful when various harmonics are used, compared to a low period device.

7. Argonne has interest in testing the ID vacuum chamber presented in the CDR (see Fig. 5), while CESR would prefer to design and use their own chamber. Figure 6 is a rough sketch of the chamber presented to us by Nari Mistry of CESR in March '86. ANL and CHESS will designate individuals to serve on a subcommittee to resolve vacuum system issues.

B. CESR Lattice Configurations

The lifetime measurements with various scrapers at about 5.17 GeV have been done since our earlier meeting in March '86. The emittance at this energy is $\varepsilon_H \sim 5 \times 10^{-8}$ m•rad and $\varepsilon_V \sim 1 \times 10^{-9}$ m•rad and the injection rate of 1 mA/min. For useful lifetimes the machine aperture is now 1.24 cm. This translates to a new value for the minimum gap of about 1.4 cm.

Hence, the curves of Fig. 1 for the tunability present even more restrictions for short period devices.

The calculations and design of the undulator presented by CESR preferred no overhang of pole pieces for a 2.0 cm device. This optimization scheme has not taken into account the demagnetization effects and were seriously questioned by Suk Kim and Jack Slater (of Spectra Tech.). The CESR design numbers are in Appendix I. The CESR plan was to glue the pole pieces to the vacuum chamber. Thus the design allows no gap variation. The photon energy is then altered by varying the ring energy.

C. CESR Time Commitments

The initial commitment of CESR availability for this undulator project is for a period of three years. Each year the ring will be run only with electrons (at an energy preferably less than 5.5 GeV) in the "dedicated" mode for users. Following is the distribution of time:

1st year - 1 month + 2 weeks

2nd year - 1 month + 1 week

3rd year - 1 month + 1 week.

The exact cost of operation to CESR is not yet given. The estimate is $500 K/month of running.

Only one month running cost has to be provided for one year by CHESS (or any other institution) to CESR. Additional week(s) will be gifted by CESR. CHESS has contacted NSF (Adriaan deGraaf and Lon Nosamow) and response has been encouraging. A definitive answer from NSF is not expected before March '87.

D. Undulator Costs

An exact figure for the undulator cost cannot be obtained till the design is finalized. Spectra Tech (represented by Jack Slater) is eager to work closely with this project and would like to build the device.

In Appendix II, we present a total cost estimate done by us in consultation with Spectra Tech during April '86. In here, we also present costs of ID vacuum chamber, and additional machine components.

The costs of the undulator will be provided by ANL.

E. Costs of Front-End and Optics

The front-end will be made from existing CHESS components and need not be rebuilt except for beam position monitors. Two- and 4-circle goniometers are also available from CHESS and hence need not be redesigned. The first optics (perhaps liquid Ga cooled) will be built by ANL and costs are covered. For the ultra high resolution monochromator, high quality Si crystals will be needed. The costs on these is under $2 to 3 K. Additional funds (< 5 K $) are needed for their temperature control. All the man-power costs on this will be absorbed by CHESS and ANL.

F. Construction Schedule

The undulator construction can begin immediately, once the design is finalized. The bottle-neck in completion will be mainly due to delays in obtaining quality magnets. The delivery in obtaining the $SmCo_5$ magnets is as long as six months. Both CESR and ANL are eager to use Nd-Fe-B. They are easy to work with machine tools (compared to $SmCo_5$), slightly cheaper at present, and there are numerous U.S. suppliers. Spectra Tech has had no experience with Nd-Fe-B magnets. Hence, they suggest mocking a few periods of the undulator with such magnets and comparing their performance with the predictions of the theoretical codes. All this can be started immediately.

It is our desire (CHESS and ANL) to install the device during August '87. There are many parameters governing this date.

G. Role of ESRF

The ESRF was represented by Dr. Jean-Louis Laclare, who is the project director. ESRF has a lot of interest in this device since it enables them to evaluate ideas on their present 6-GeV plan. They will need more time and facts presented in this report prior to their defined involvement in the project. Both CHESS and ANL showed their enthusiasm in having European involvement in this effort.

I. Next Step

Following is the result of a discussion on August 5, 1986, between Bob Batterman and Gopal Shenoy. ANL will finalize the undulator period based on the following issues/facts:

- Provide as high a photon energy in the first harmonic of the undulator (e.g., 10 keV).
- Derive tunability by varying both the magnet gap as well as ring energy from 4.4 GeV to 6.00 GeV.

The outcome will be folded in a joint NSF proposal.

Appendix I

CESR design for an undulator with permendur pole pieces

Period	2.0 cm
Aperture	1.25 cm
Minimum Gap	1.35 cm
Pole overhang	0.00 cm
Pole thickness	0.25 cm
Pole width	8.00 cm
Pole height	1.713 cm
Magnet thickness	0.775 cm
Magnet width	9.03 cm
Magnet height	2.10 cm
Distance to back plate	0.43 cm
Calculated brilliance (100 ma)	8×10^{16}

LIST OF ATTENDEES

(August 4, 1986, Argonne National Laboratory)

ARGONNE	CHESS/CESR	ESRF	SPECTRA TECH
Y. Cho	B. Batterman	J.-L. Laclare	J. Slater
E. Crosbie	K. Berkelman		
F. Y. Fradin	E. Blume		
S. Kim	D. Hartill		
R. Kleb	D. Mills		
K. L. Kliewer			
J. Moenich			
A. Rauchas			
G. K. Shenoy			
R. Smither			
L. Teng			
P. J. Viccaro			
R. Wehrle			

APPENDIX II (dated April 15, 1986)

CHESS Undulator Approximate Cost Breakdown (K$)

(Grand Total cost $500K and does not include the ANL scientific staff time or CESR/CHESS Academic staff time)

ITEM		Engineering Design	Procurement from Outside	Construction	Assembly/ Testing	Integration at CHESS	TOTAL
Magnets†† (2.8cm,2.6m)		-	40	-	-	-	40
Strong Back	Material	-	20	40	-	10	70
	Labor	40*	-	100	30†	20	190
Support Frame (manual gap)	Material	-	10	5	-	2	17
	Labor	10*	-	10	5	-	25
Vacuum Chamber	Material	-	20	5	-	5	30
	Labor	-**	-	20	5	5	35
Miscellaneous	Material	-	5	10	5	3	23
	Labor	-	-	10	5	5	20
Feedback Needs	Material	-	5	-	-	-	5
	Labor	-**	-	45**	-	-	45

*Assuming Spectra Tech agrees to this figure (~30% of actual cost)
**Done at CESR
†Student/Postdoc help at Spectra Tech
††The period may be different in the final design.

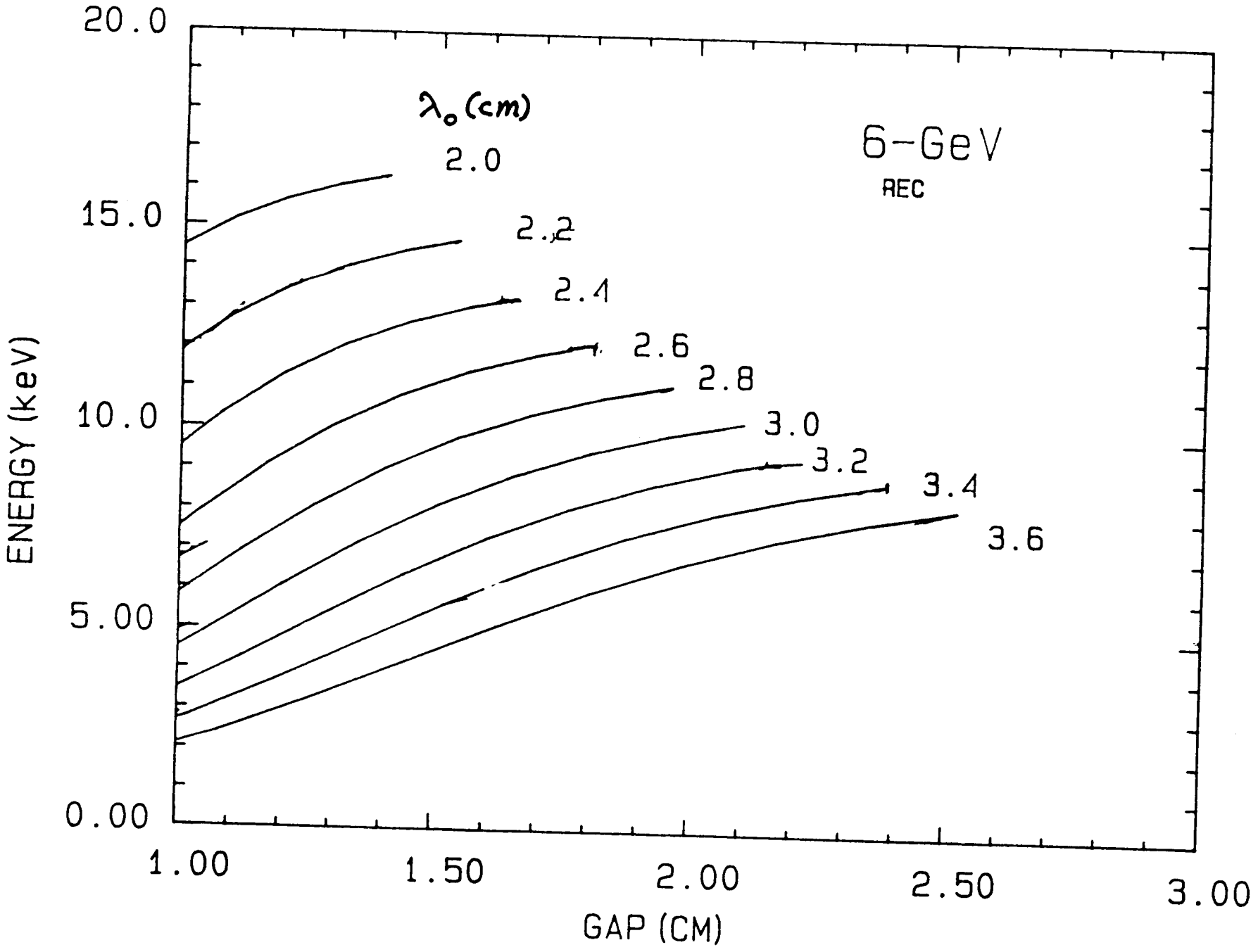
20.0
15.0
10.0
5.00
0.00
ENERGY (keV)
1.00
1.50
2.00
2.50
3.00
GAP (CM)
λ₀ (cm)
2.0
2.2
2.4
2.6
2.8
3.0
3.2
3.4
3.6
6-GeV
REC

Fig. 1

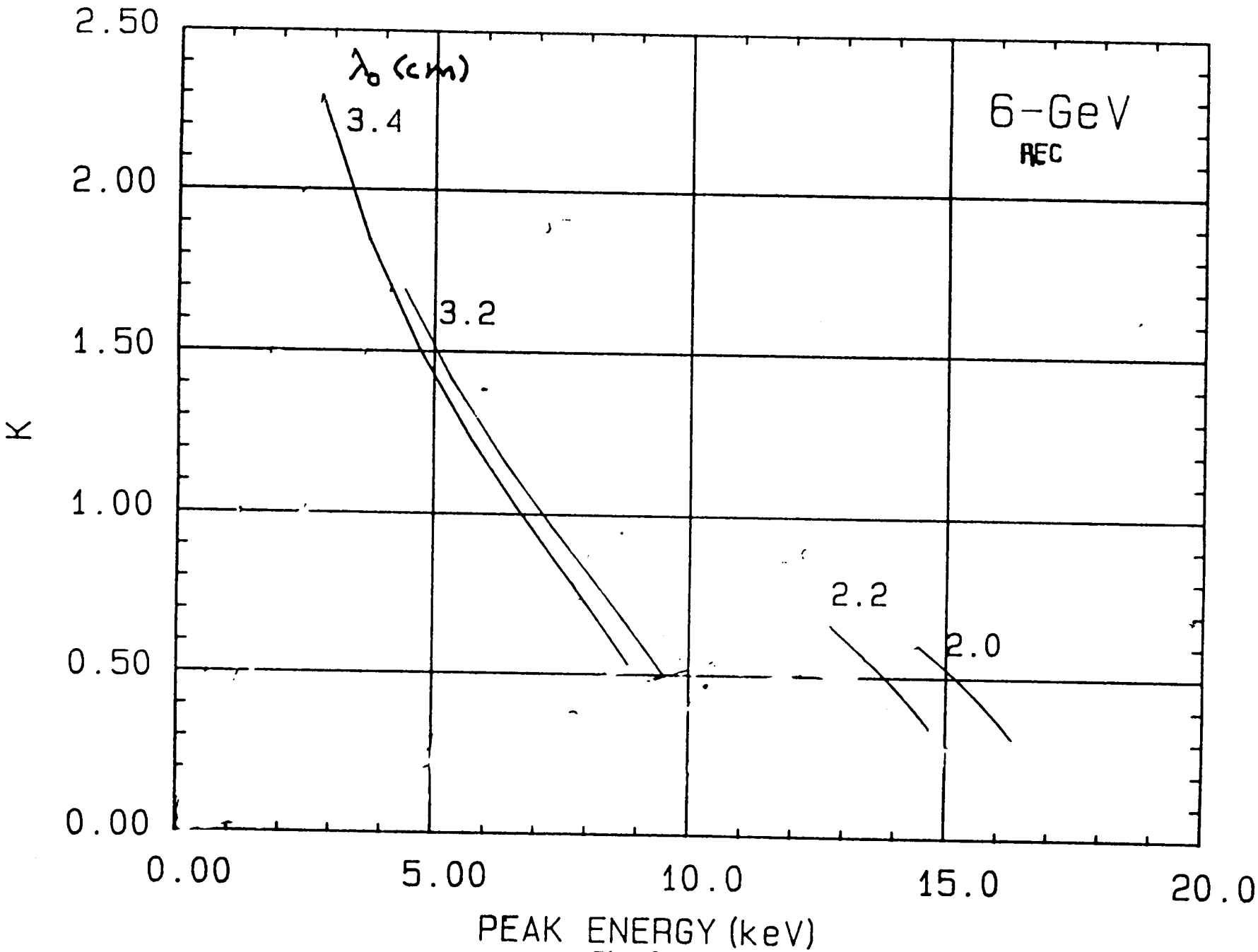
2.50
2.00
1.50
1.00
0.50
0.00
K
λ_0 (cm)
3.4
3.2
2.2
2.0
6-GeV
REC
0.00
5.00
10.0
15.0
20.0
PEAK ENERGY (keV)

Fig. 2

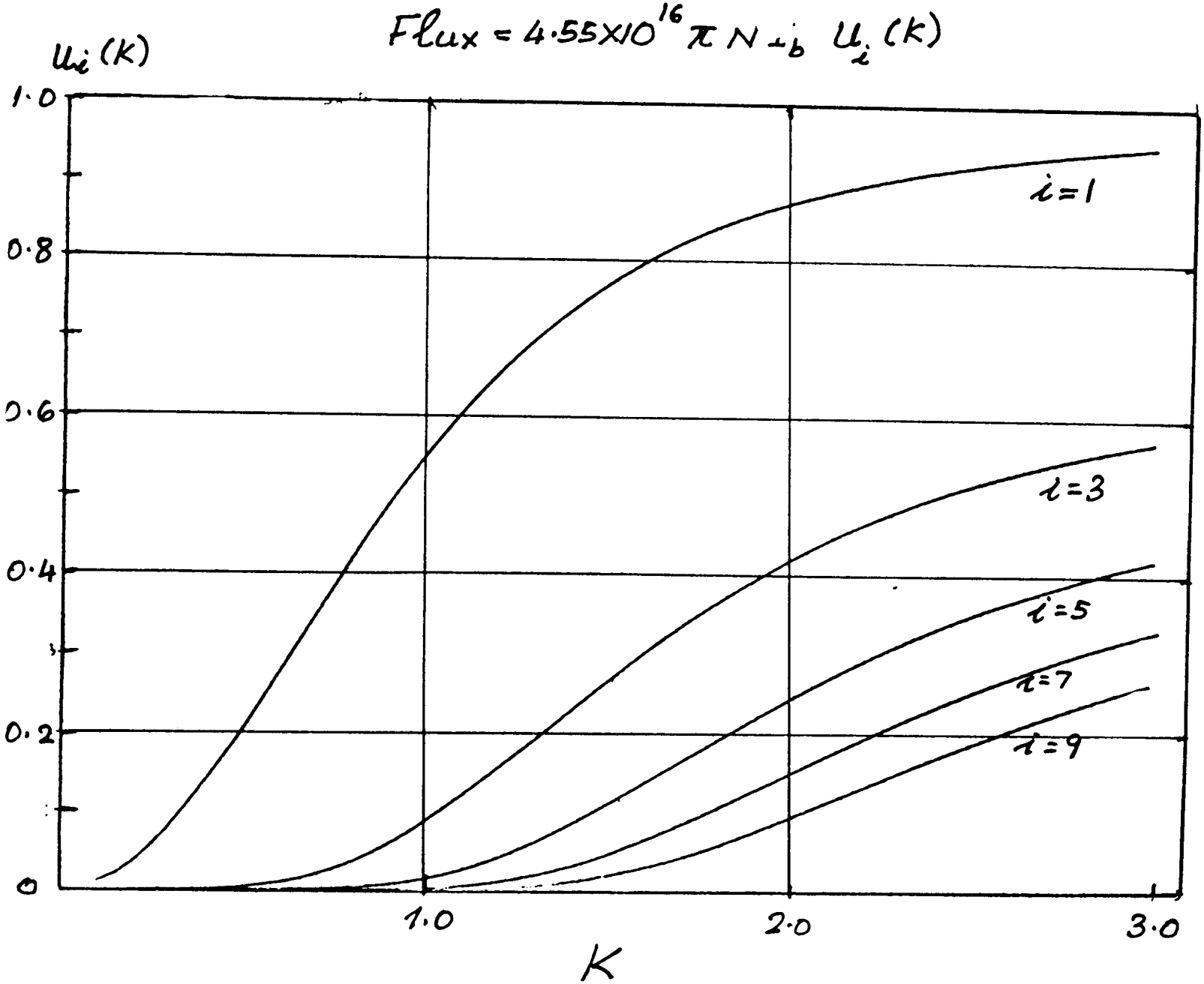

Fig. 3

K+E 10 X 10 TO THE ½ INCH 358-11
KEUFFEL & ESSER CO. MADE IN U.S.A.

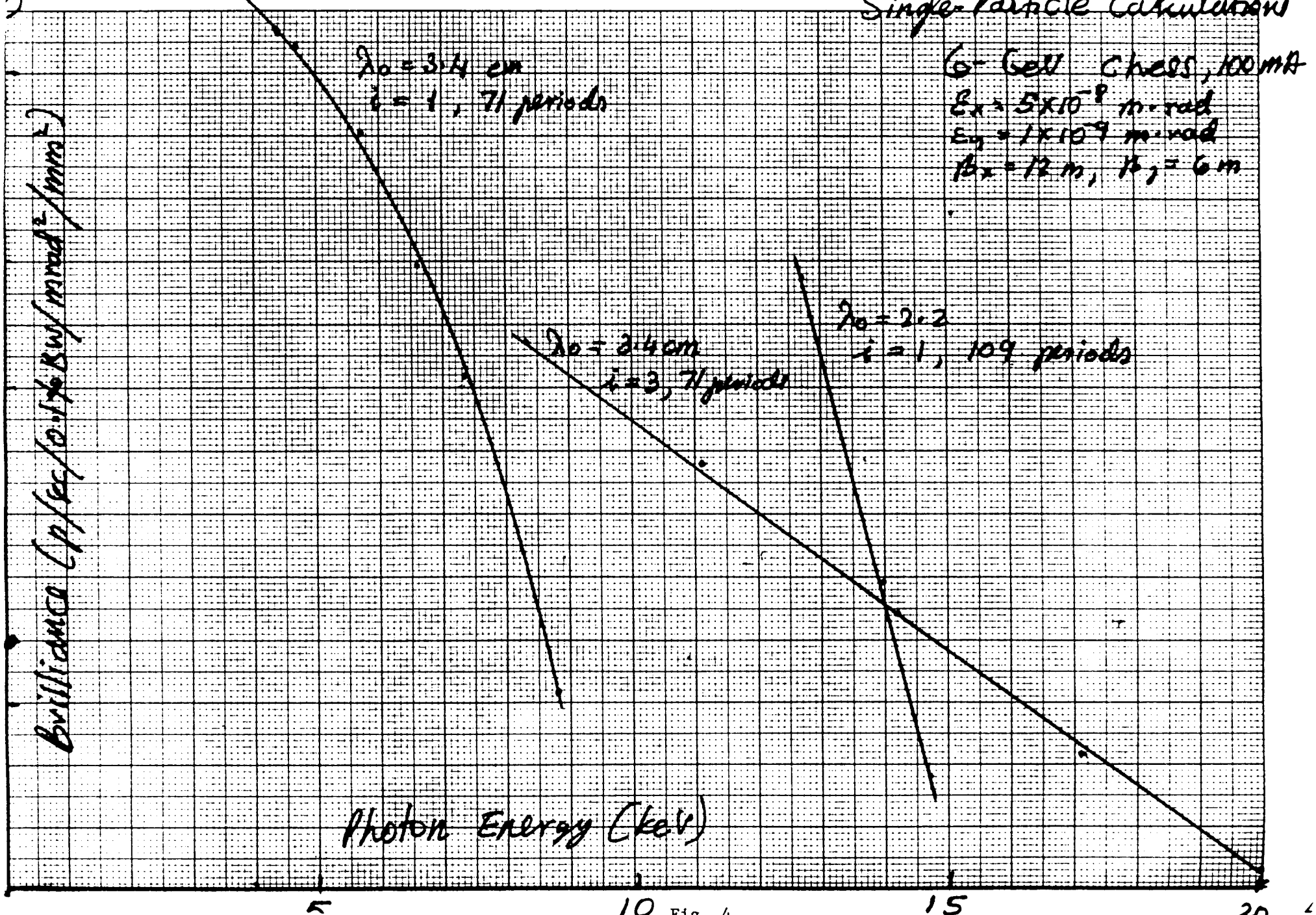

Fig. 4

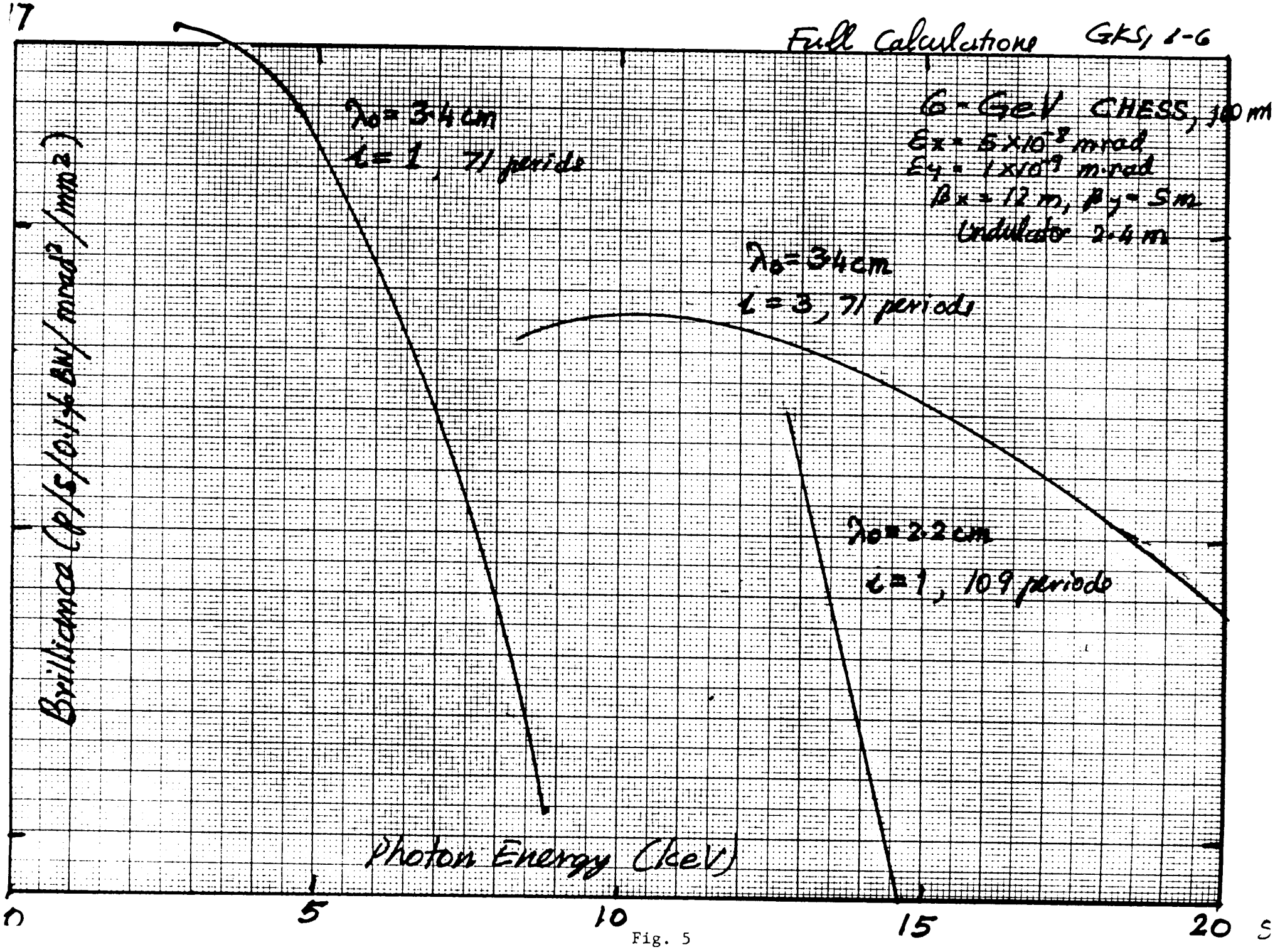
Full Calculations GKS, 1-6
6 - GeV CHESS, 100 mA
$\epsilon_x = 5\times10^{-8}$ m·rad
$\epsilon_y = 1\times10^{-9}$ m·rad
$\beta_x = 12$ m, $\beta_y = 5$ m
Undulator 2.4 m
$\lambda_0 = 3.4$ cm
$\ell = 1$, 71 periods
$\lambda_0 = 3.4$ cm
$\ell = 3$, 71 periods
$\lambda_0 = 2.2$ cm
$\ell = 1$, 109 periods
Brilliance (ph/s/0.1% BW/mrad²/mm²)
Photon Energy (keV)
0
5
10
15
20

Fig. 5

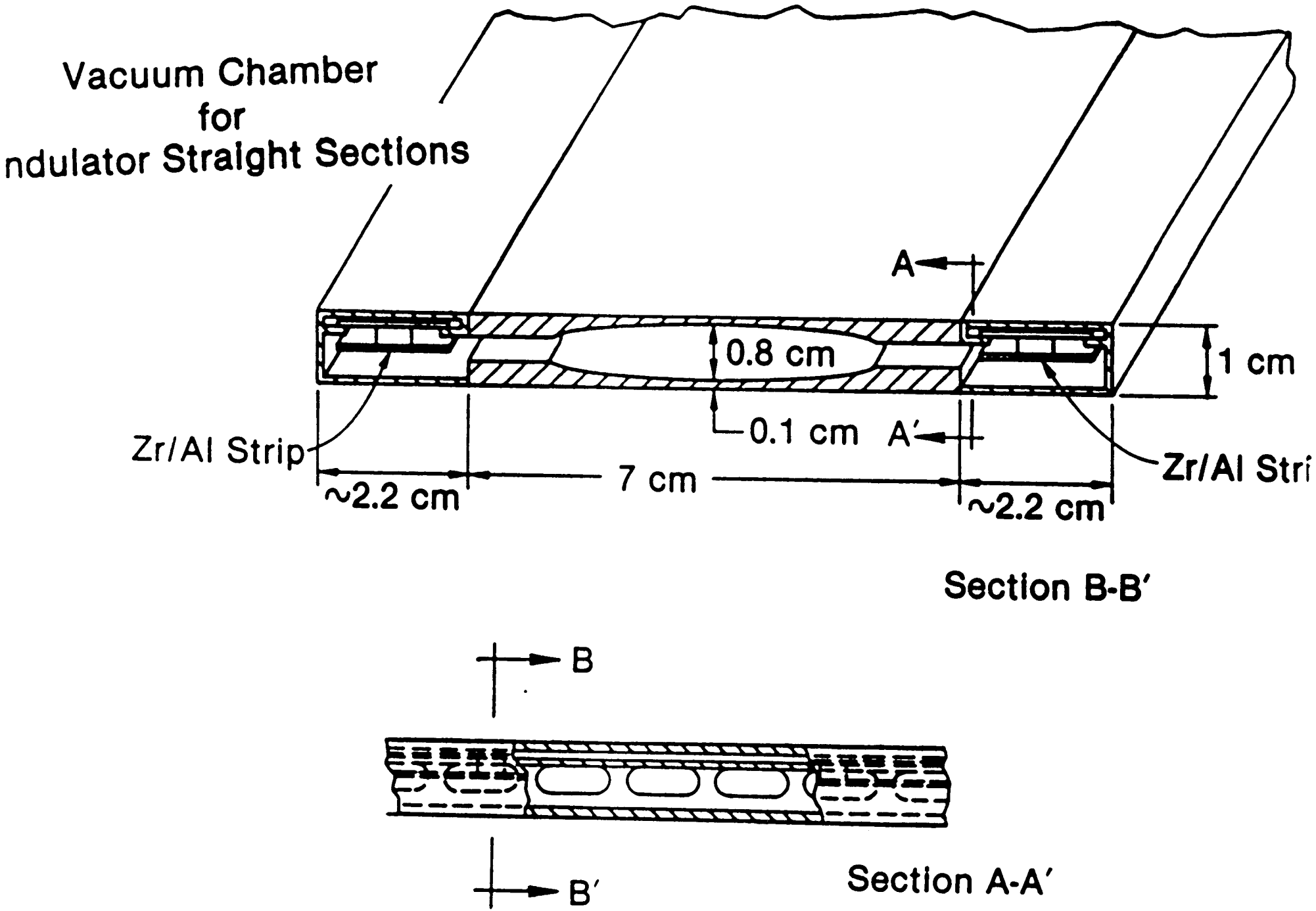
Vacuum Chamber
for
ndulator Straight Sections
A
0.8 cm
1 cm
0.1 cm
A'
Zr/Al Strip
Zr/Al Stri
~2.2 cm
7 cm
~2.2 cm
Section B-B'
B
B'
Section A-A'

Fig. 6