LS-112
W. Chou and Y. Jin
July 1988

IMPEDANCE STUDIES - PART 1
A COMPOSITION RULE

The impedances and the loss factors experienced by a particle beam that circulates in the APS storage ring play an essential role in the studies of the beam instability problem. Due to a large variety of structures in the ring, the computation of these parameters amounts to enormous work. During the last months, this was tackled numerically by invoking the MAFIA family, a set of codes developed mainly at DESY. The results are to be reported in several LS notes. This note is the first part and will discuss a composition rule that we observed in our calculations.

The composition rule can be stated as follows. For a complicated structure, one may decompose it into simple components and compose these components to form new structures. Under certain conditions, the old and the new structures will give the same loss factors. This rule is in analogy to and an extension of the law of addition of resistances in sequence in the conventional circuit theory. We will take two examples to illustrate this rule.

The first one is a periodic structure. Each period consists of two beam pipes of different transverse dimensions and two tapered sectors between them, see Fig. 1. This layout mimics the basic feature of the vacuum chamber system of the APS storage ring. The big pipe represents the beam chamber, and the small one the insertion device section. To employ the composition rule, we first decompose this long structure into two sorts of components - the expansion type [Fig. 2(a)] and the pinch type [Fig. 2(b)]. Then, we compose them to form three different new structures, the cavity type [Fig. 2(c)], the scraper type [Fig. 2(d)], and the two-period type [Fig. 2(e)]. The composition rule then says that both the cavity and the scraper type should have the same losses, which should be equal to the sum of that of the expansion and the pinch components, and that the losses of the two-period type should be twice as big as that of the cavity component. This assertion can be easily verified by examining Tables 1 and 2, which list the results obtained from MAFIA and from TBCI, respectively.

However, it should be pointed out that special caution is needed in calculating the losses of the expansion, the pinch and the scraper components in order to get the correct results. For each of these components, the numerical computation would require that the beam pipe at both ends be infinitely long. This, of course, is practically impossible. One has to truncate both the entrance and the exit beam pipe to finite lengths, say, L_{in} and L_{out}. This truncation will have a drastic effect on the numerical output. As an example, Fig. 3 shows that, as the length L_{out} increases, the TBCI output for the longitudinal loss of the scraper component would oscillate around some value, which coincides with that of the cavity component. When L_{out} becomes long enough, the oscillation would converge to this value. Similar phenomena have also been observed in the MAFIA output. This oscillatory curve is solely due to the truncation of L_{out} and can be understood in the following way. On the one hand, when one is close to a scattering point (i.e., the place where discontinuity occurs) in the beam pipe, the electric fields would be greatly perturbed by the scattering. Therefore, the integration of the fields along the beam moving direction would have different values for different truncation lengths. When, on the other hand, this length is long enough, it is conceivable that the fields in the beam pipe would eventually "forget" the scattering and that the field integration would keep a constant value as observed in Fig. 3.

On the contrary, the output of the losses calculated for the cavity component is rather simple. It has no dependence on the truncation lengths and always gives a constant value as shown in Fig. 3. This is due to the trick that one may integrate along the wall in this case.

Meanwhile, the following interesting things have been noticed. (a) Unlike L_{out}, the truncation of L_{in} has only a little effect on the output of the field integration. (b) Unlike the longitudinal loss, the output of the transverse ones has no significant change when one varies L_{out} or L_{in}. (c) the truncation of L_{out} does not have a strong influence on the amplitude of the longitudinal wake $W_{\parallel}$; rather, this truncation would change the position of the zero of $W_{\parallel}$ in the bunch frame, which, in turn, would change the output for the integration $\int W_{\parallel}\lambda$ (in which λ is the charge density) in a drastic way. These observations have not yet been understood completely. A more careful investigation is underway.

The second example is a complex structure that consists of an RF cavity with two 14-cm-diameter beam ports, and the transition between the beam ports and the beam chamber, see Fig. 4. The cross-section of the beam chamber, which is an ellipse, is approximated by a circle. (The reader is referred to Ref. 1 for a detailed discussion of this circular approximation.) In this example, we decompose the structure into three pieces - the expansion component [Fig. 5(a)], the pinch component [Fig. 5(b)], and the Rf cavity [Fig. 5(c)]. Then, we compose the first two to form a new structure, the transition component, as shown in Fig. 5(d). The loss factors were computed for each component and for the whole structure as well. The results obtained from TBCI are listed in Table 3. Again, the composition rule holds to one's satisfaction.

In summary, our studies show that in order to estimate the losses of a complicated structure, one may invoke the composition rule to decompose it into simple components and compose these components to form new structures so that the losses would be easier to calculate. The numerical results of the losses before and after this recomposition procedure would remain unchanged, provided that one does the integration correctly (such as to keep L_{out} long enough in the first example).

Reference

1. W. Chou and Y. Jin, "Impedance Studies - Part 2: A Circular Approximation of Elliptical Cross-Sections," ANL Light Source Note LS-113 (April 1988).

Table 1

MAFIA Output for the
Loss Factors of a Periodic Structure*

Component/Structure	Longitudinal, $k_{\parallel}$ (V/pC)
Expansion	486.6×10^{-3}
Pinch	-484.6×10^{-3}
Cavity	1.956×10^{-3}
Scraper	2.064×10^{-3}
2-period	3.913×10^{-3}

*RMS bunch length σ = 1.75 cm.

Table 2

TBCI Output for the Loss Factors of a Periodic Structure*

Component/Structure	Longitudinal, $k_{\parallel}$ (V/pC)	Transverse, $k_{\perp}$ (V/pC•m)
Expansion	46299.0×10^{-5}	551.1
Pinch	-46294.4×10^{-5}	-501.94
Cavity	3.561×10^{-5}	54.41
Scraper	3.715×10^{-5}	43.95
2-period	7.117×10^{-5}	108.8

*RMS bunch length σ = 1.75 cm.

Table 3

TBCI Output for the Loss Factors of a Combined RF Cavity - Transition Structure*

Component/Structure	Longitudinal, $k_{\parallel}$ (V/pC)	Transverse, $k_{\perp}$ (V/pC•m)
RF Cavity	0.3199	2.235
Transition	0.0123	5.561
Whole Structure	0.3424	7.995

*RMS bunch length σ = 1.75 cm.

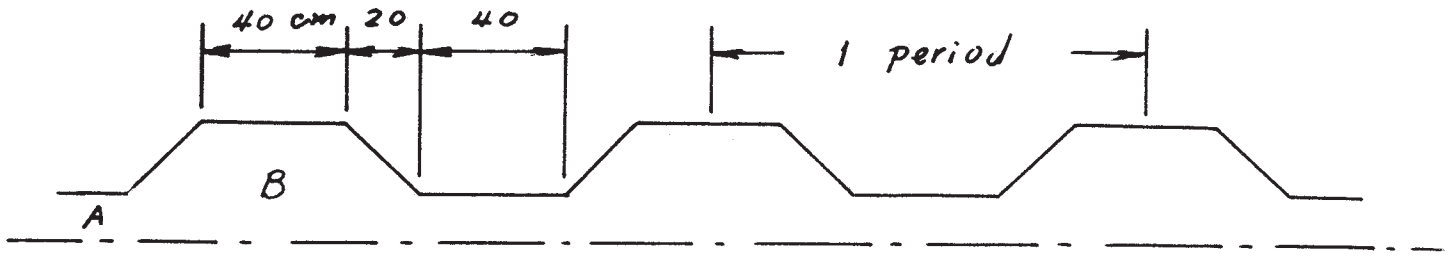

Fig. 1. A periodic structure with transverse dimensions at A equal to 2.5 x 0.4 cm^2 (for an ellipse) or 0.4 cm (for a circle); at B equal to 4.235 x 2.085 cm^2 (for an ellipse) or 2.085 cm (for a circle).

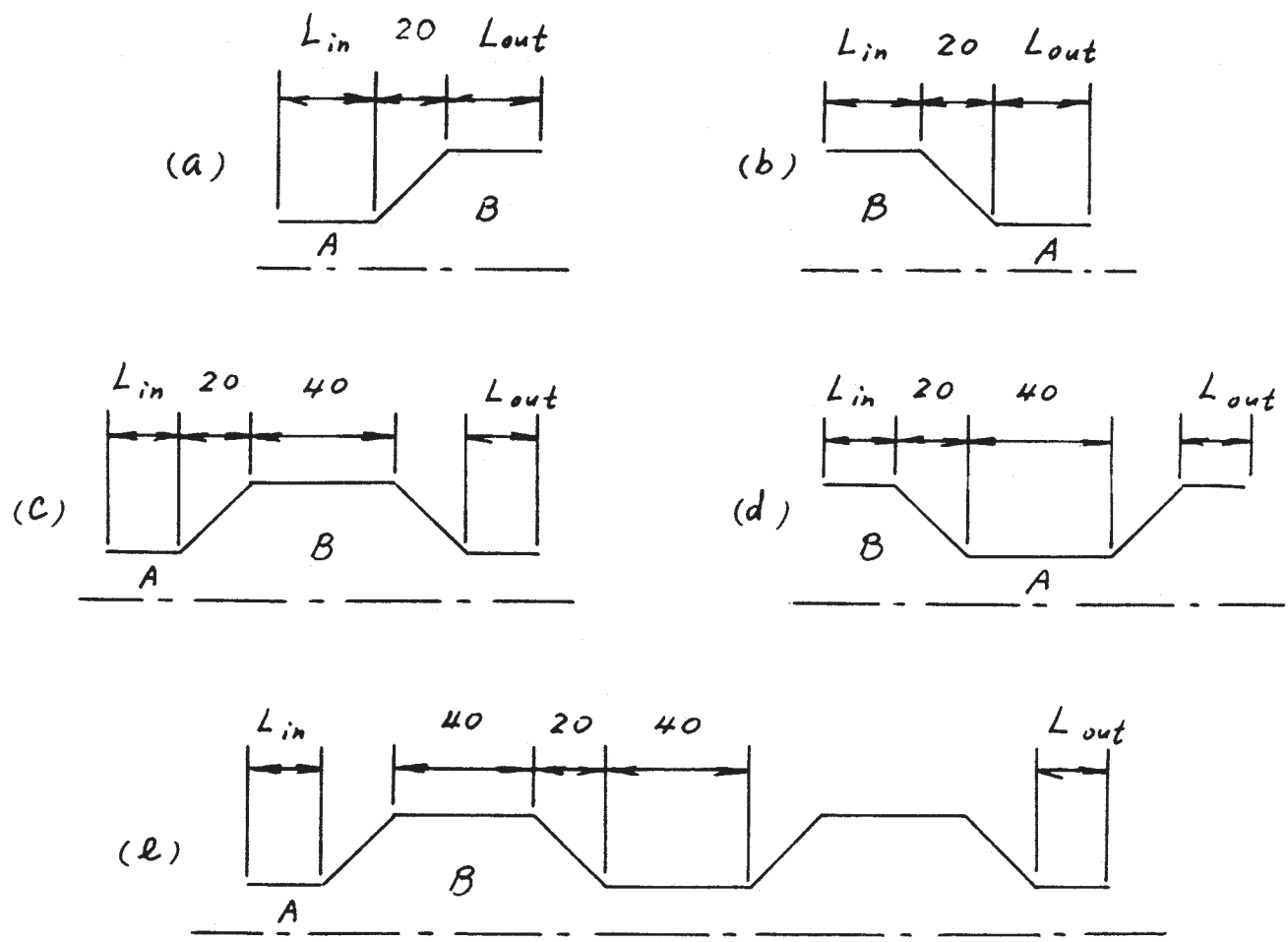

Fig. 2. The components derived from Fig. 1 through a recomposition procedure: (a) the expansion, (b) the pinch, (c) the cavity, (d) the scraper, and (e) the two-period types. The lengths L_{in} and L_{out} are discussed in the text.

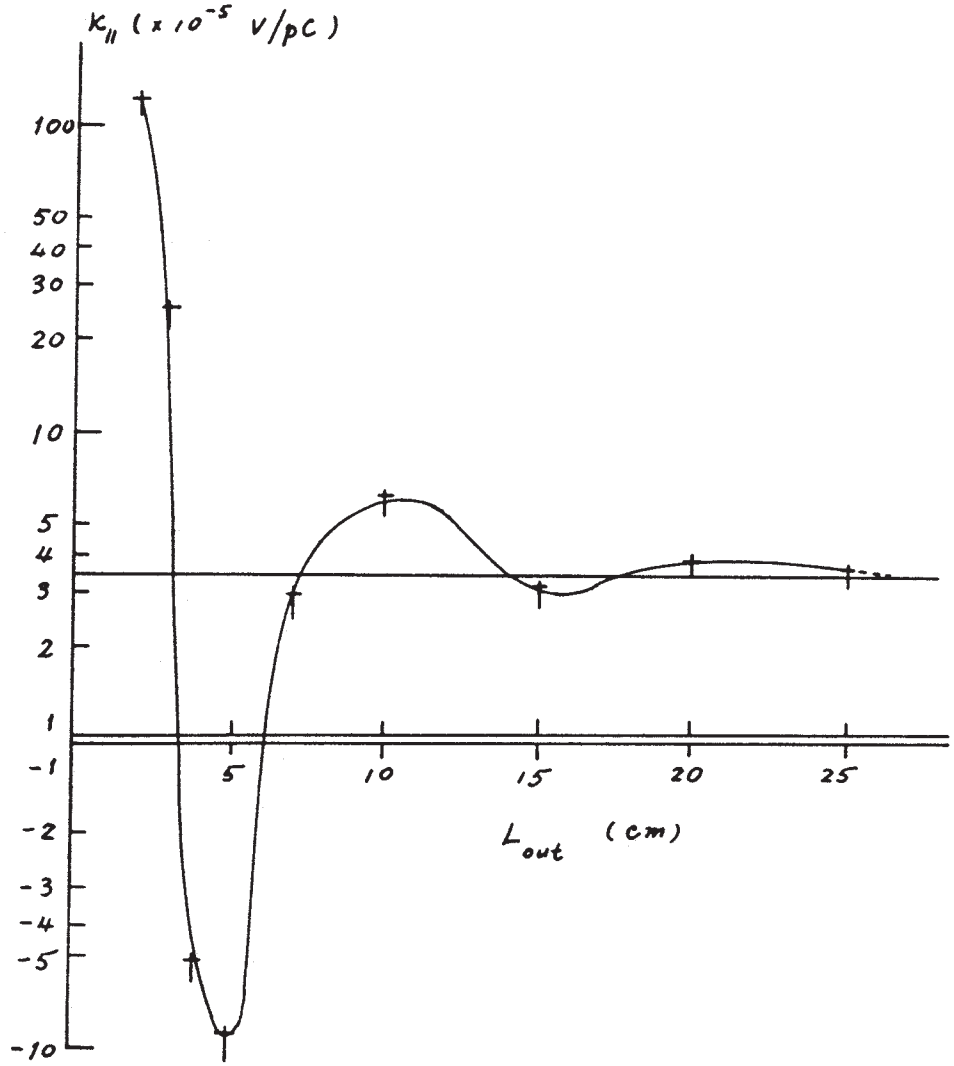

Fig. 3. The oscillatory behavior of the TBCI output for the longitudinal loss factor of the scraper component as the truncation length L_{out} varies. The straight line is that of the cavity component.

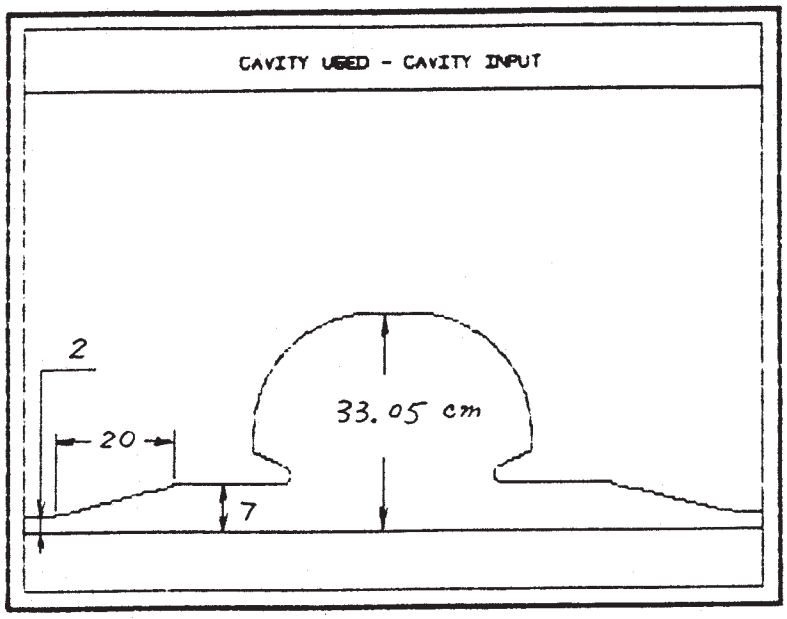

Fig. 4. A combined RF cavity-transition structure.

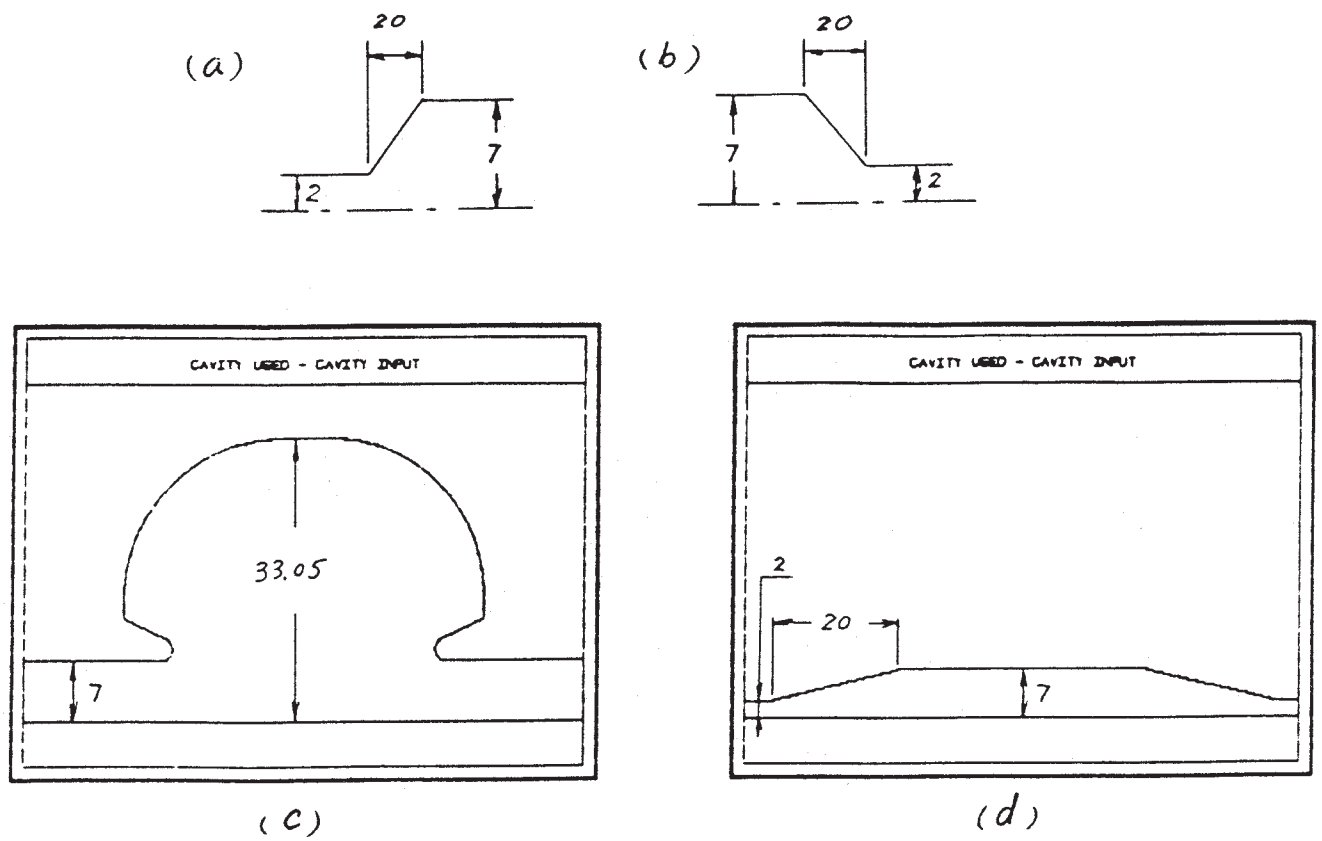

Fig. 5. The components derived from Fig. 4 through a recomposition procedure. (a) the expansion, (b) the pinch, (c) the RF cavity, and (d) the transition types.