# PLS-II Control System

2012. 10. 22

Changbum Kim

Eun Hee Lee

on behalf of control group

# Contents


- Introduction of PLS-II
- Low-level Device Control System
- High-level Operator Interface System
- Event Timing System
- Machine Interlock System
- Control Network

# Contents


- Introduction of PLS-II
- Low-level Device Control System
- High-level Operator Interface System
- Event Timing System
- Machine Interlock System
- Control Network

# Introduction of PLS-II

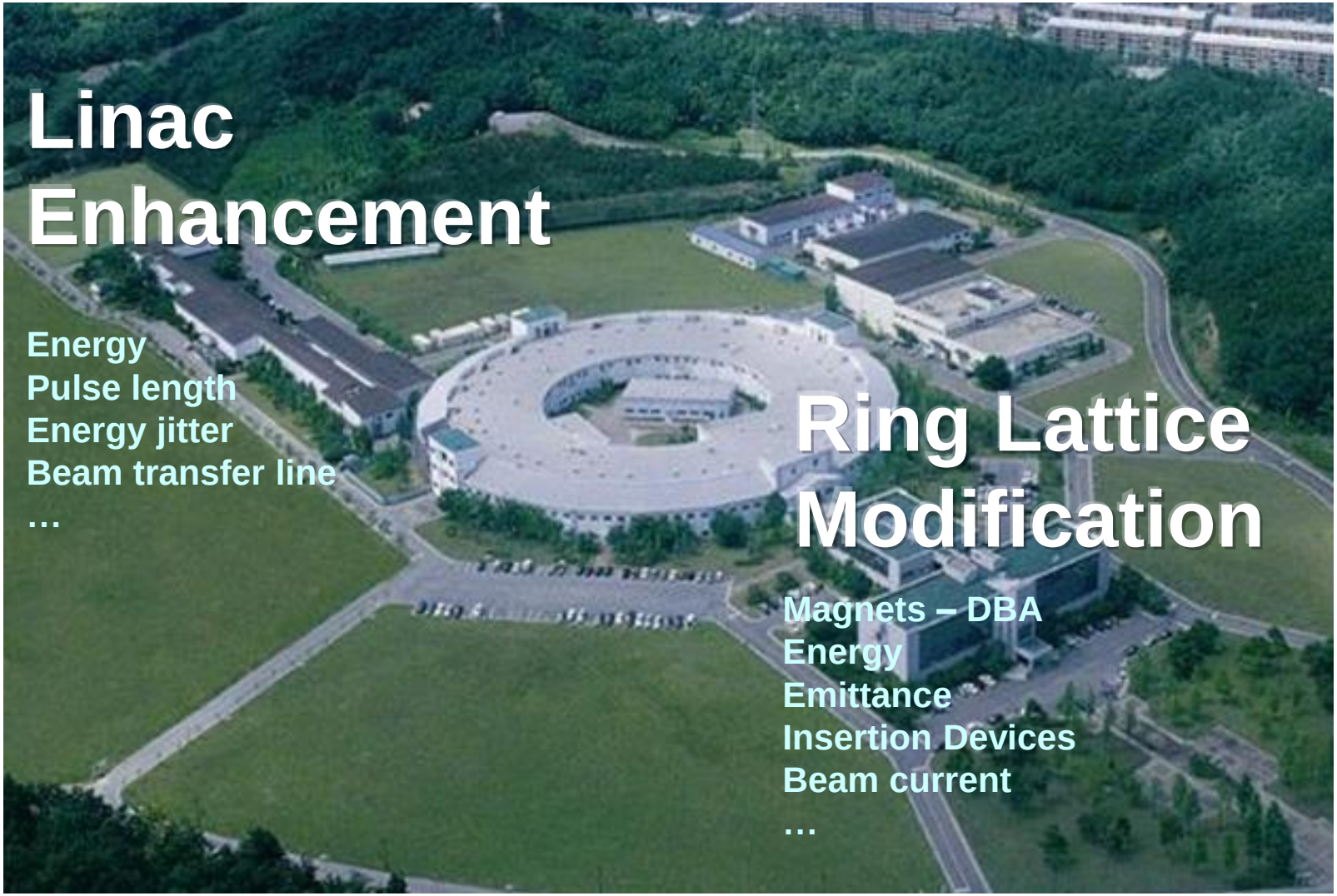

# PAL: Chronology

| | | | |
|---|---|---|---|
| Past | I. PLS | | |
| | ▪ Project started | Apr. 1 | 1988 |
| | ▪ Ground-breaking | Apr. 1 | 1991 |
| | ▪ 2-GeV Linac commissioning | June 30 | 1994 |
| | ▪ Storage ring commissioning | Dec. 24 | 1994 |
| | ▪ User's service started | Sept. 1 | 1995 |
| | ▪ 1st PLS Upgrade Complete | Nov. 1 | 2002 |
| | ✓ Energy ramping to 2.5 GeV | Sept. 1 | 2000 |
| | ✓ 2.5-GeV injection | Nov. 1 | 2002 |
| Present | II. 2nd Major Upgrade of the PLS (PLS-II) | | |
| | ▪ 3.0 GeV PLS-II Upgrade begin | Jan. | 2009 |
| Future | ▪ 3.0 GeV PLS-II Upgrade Complete | Dec. | 2011 |
| | III. PAL XFEL (10GeV Linac & SASE Based 0.1 nm x-ray FEL) | | |
| | ▪ Project Approval | | 2010 |
| | ▪ Project Start | | 2011 |
| | ▪ (Anticipated) Construction Complete | | 2014 |

# Major Goal of the PLS-II Upgrade

| Item | PLS | PLS-II |
|---|---|---|
| Increase Energy | 2.5 GeV | 3.0 GeV |
| Lower Emittance | 18.9 nm·rad | 5.6 nm·rad |
| Increase Stored Beam Current | 200 mA | 400 mA |
| Increase No. of IDs | 10 | 20 |
| Increase Brightness | $\sim 2\times10^{18}$ | $\sim 10^{20}$ |
| Change Lattice Type | TBA | DBA |
| Change Operation Mode | Decay | Top-up |

# EPICS

**(Experimental Physics and Industrial Control System)**

- A standard tool-kit for accelerator control system
- Proven performance and reliability
- Many applications in the world
- World-wide collaboration

# Configuration Diagram of PLS-II Control

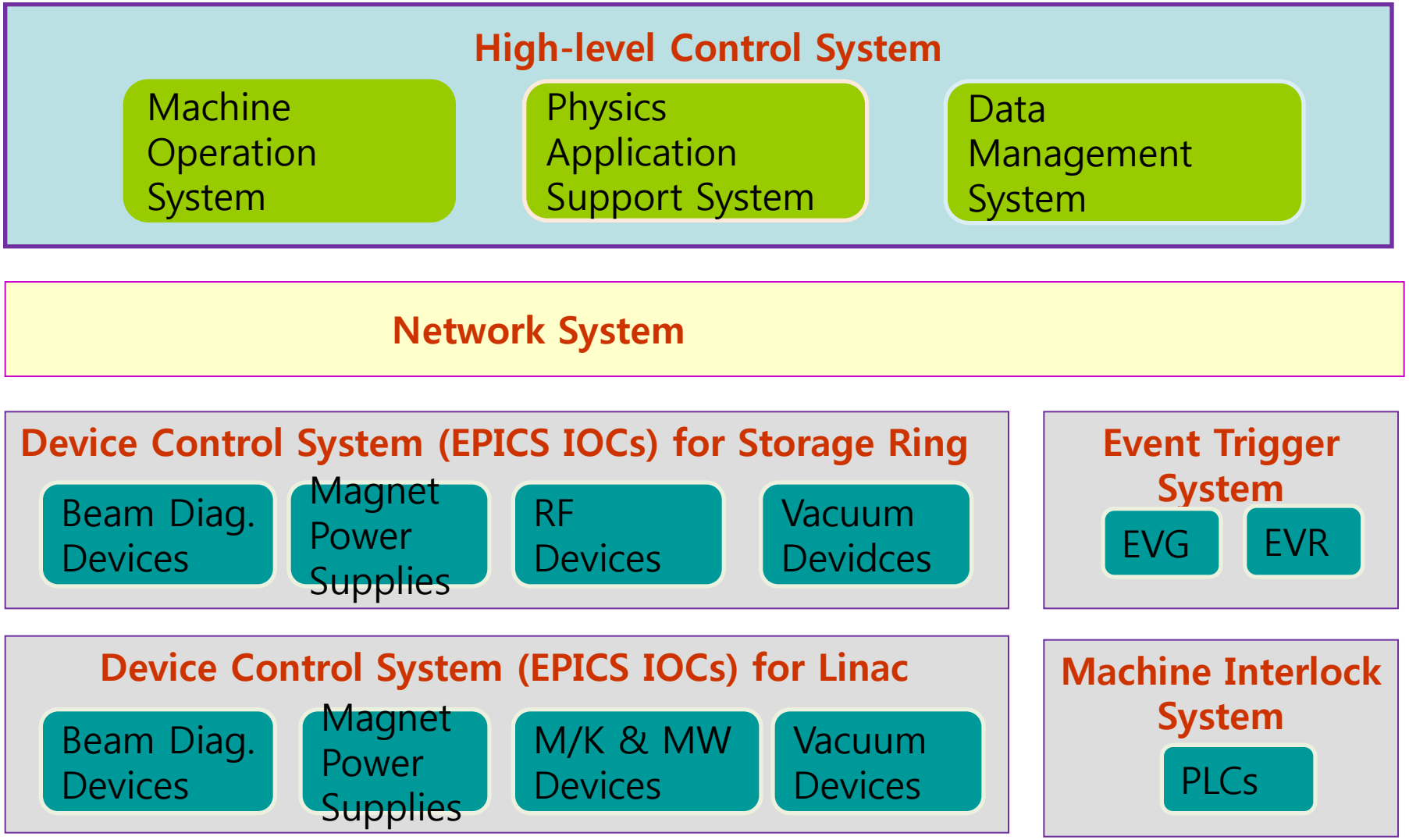

# Environment of EPICS PV Gateway Server

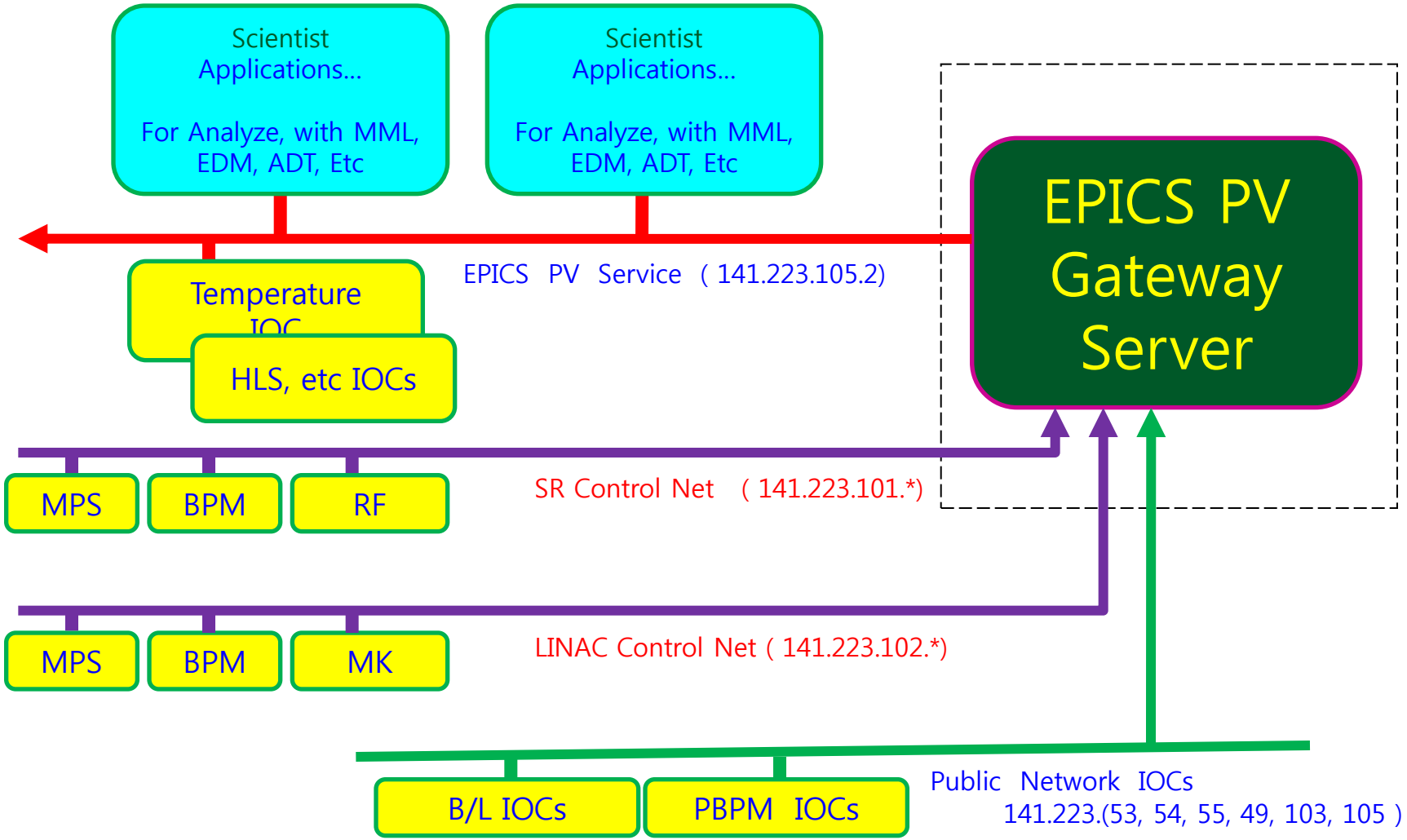

# Contents


- Introduction of PLS-II
- Low-level Device Control System
- High-level Operator Interface System
- Event Timing System
- Machine Interlock System
- Control Network

# Low-level Device Control System

- VME EPICS IOCs
- PC EPICS IOCs
- CompactPCI EPICS IOC
- EPICS Embedded Controller

# Device Control for Linac MPS

- EPICS Embedded MPS Controllers
- CA-Gateway

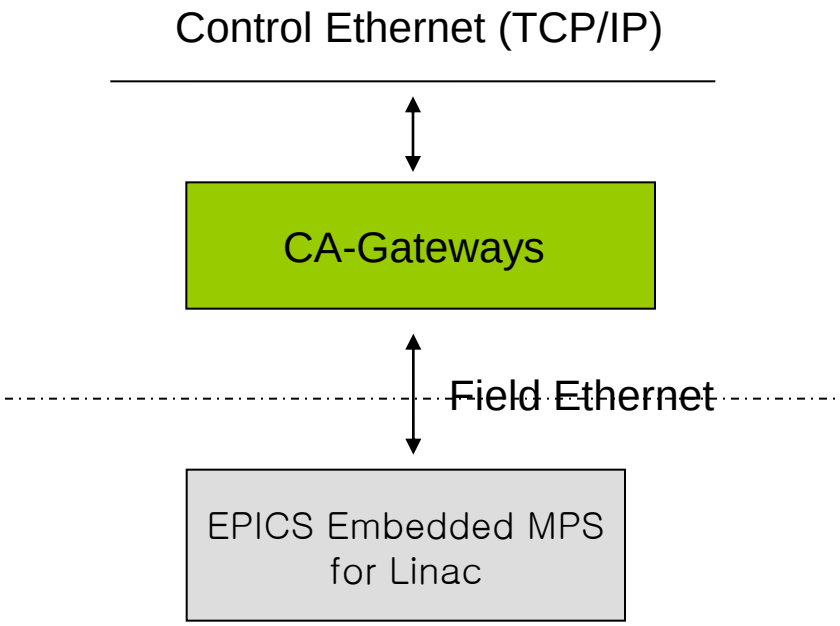

# Linac Magnet Power Supply Control System

- Total 88 magnet power supplies (Preinjector : 30, Linac : 24, BTL : 34)
- All power supplies are embedded with EPICS IOCs and recycled from PLS

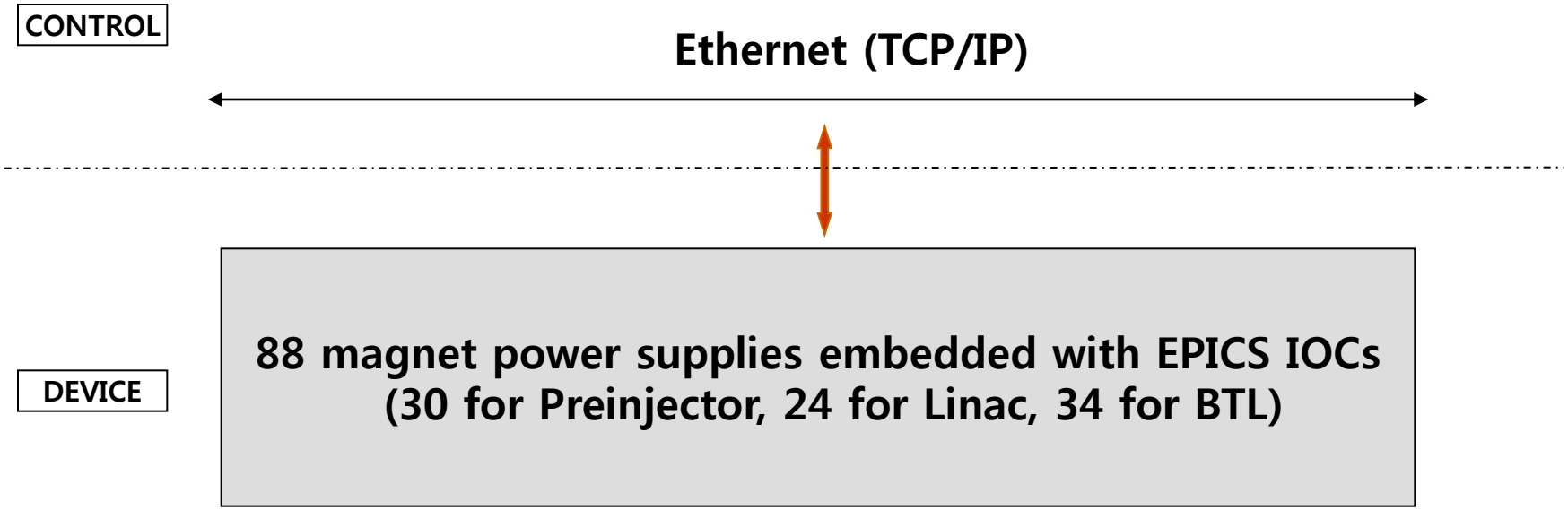

# Device Control for Linac M/K

- EPICS Embedded PLC Controller

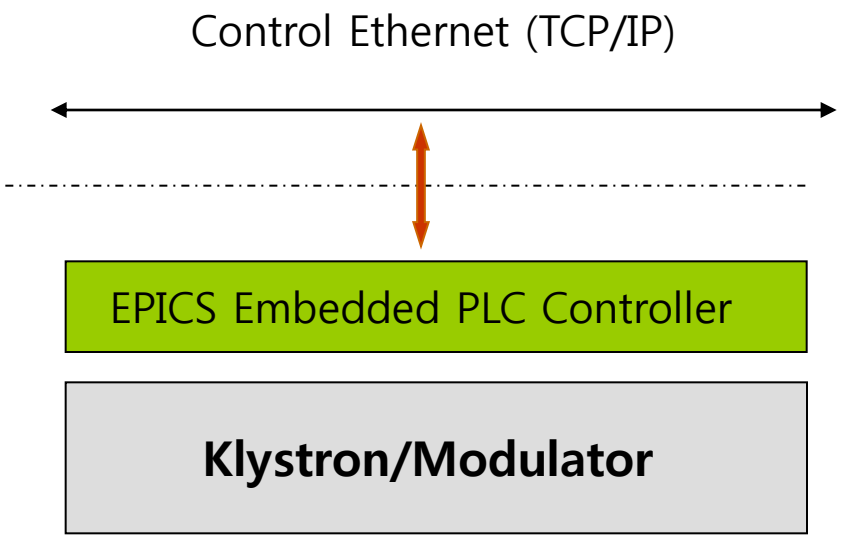

# Linac Modulator/Klystron Control System

- Total 16 Modulator/Klystron units
- 16 Yokogawa PLC-based local controllers supporting M/K units
- PLC controllers also support Linac vacuum devices (guages, pumps)

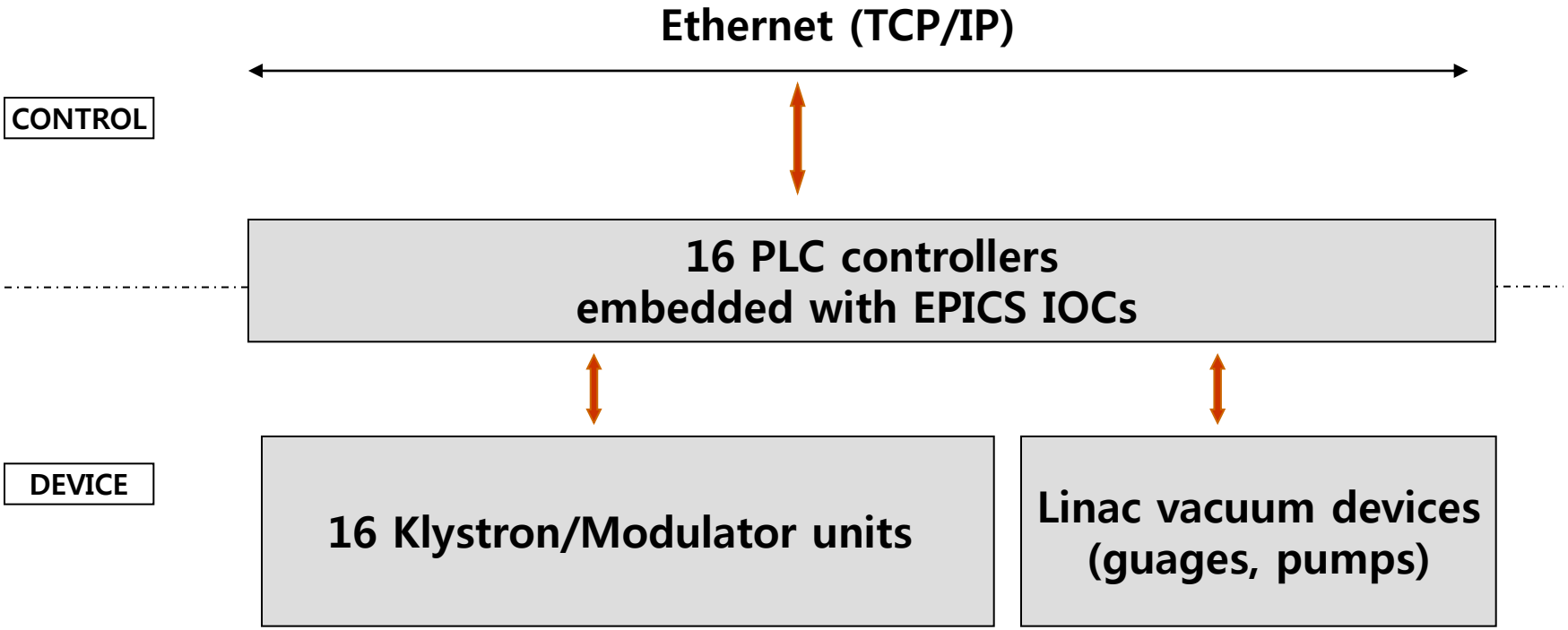

# Device Control for Linac Microwave

- Linux PC IOCs

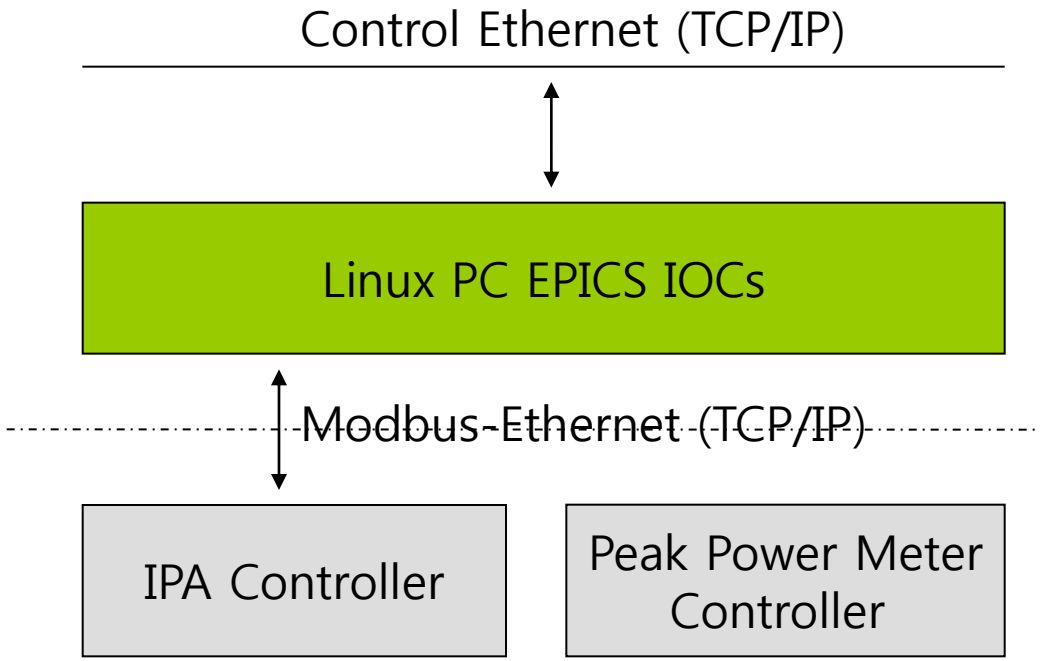

# Linac Microwave IPA Control System

- Total 16 local controllers to support Microwave IPAs
- Controllers with Ethernet (TCP/IP Modubus) interface for remote control
- One PC EPICS IOC for the remote control of IPAs

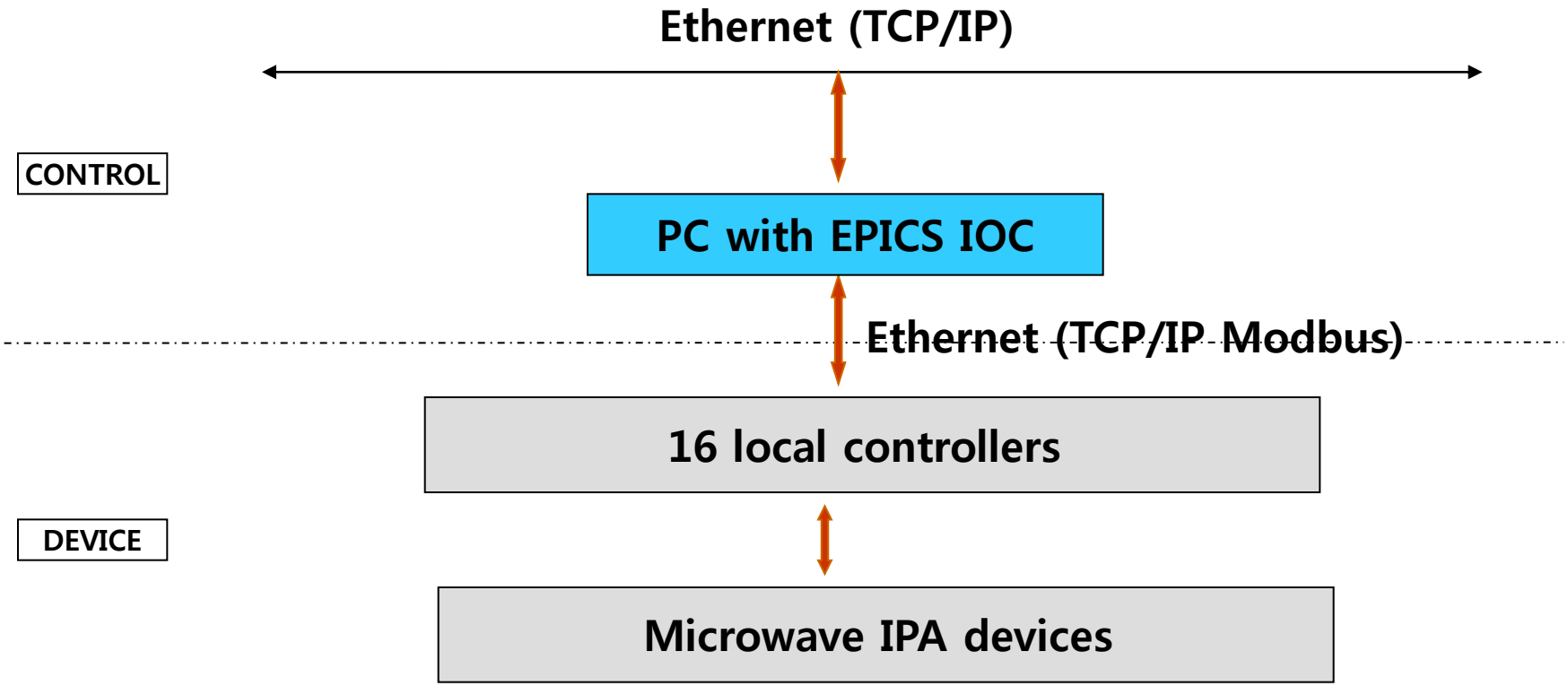

# Device Control for Linac BPM

- EPICS-embedded Micro-IOC from Cozy Lab.

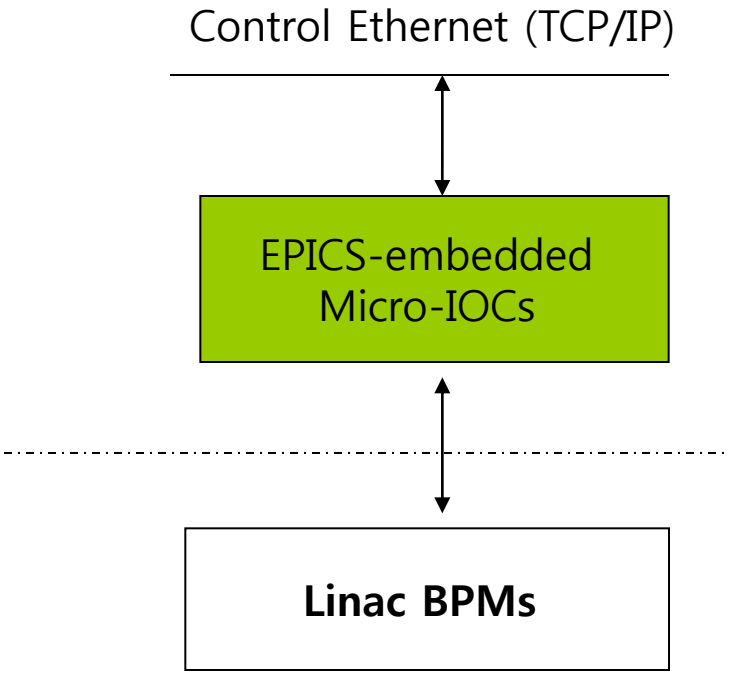


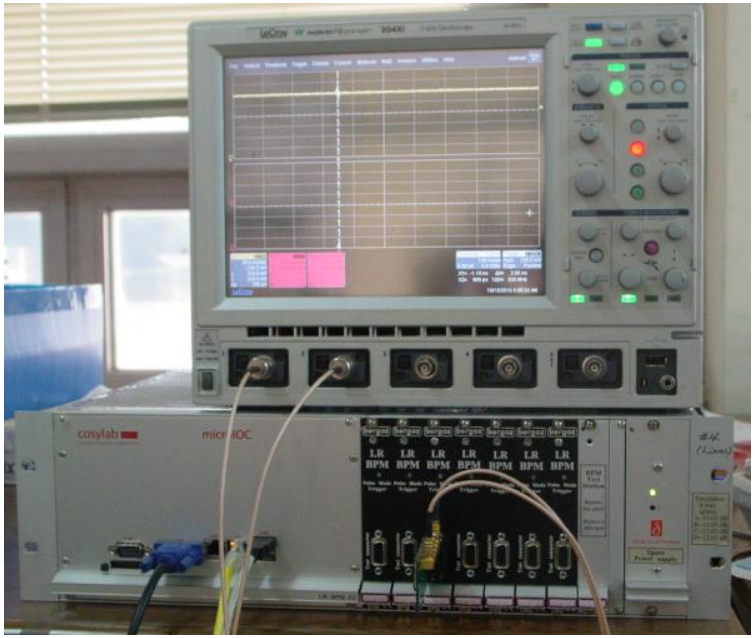

# Linac BPM Control System

- 24 BPMs (Linac : 10, BTL : 14)
- Four MicroIOCs from Cozylab, under lab testing
- Controls for other devices such as BCM, BLM, etc. : recycled from PLS

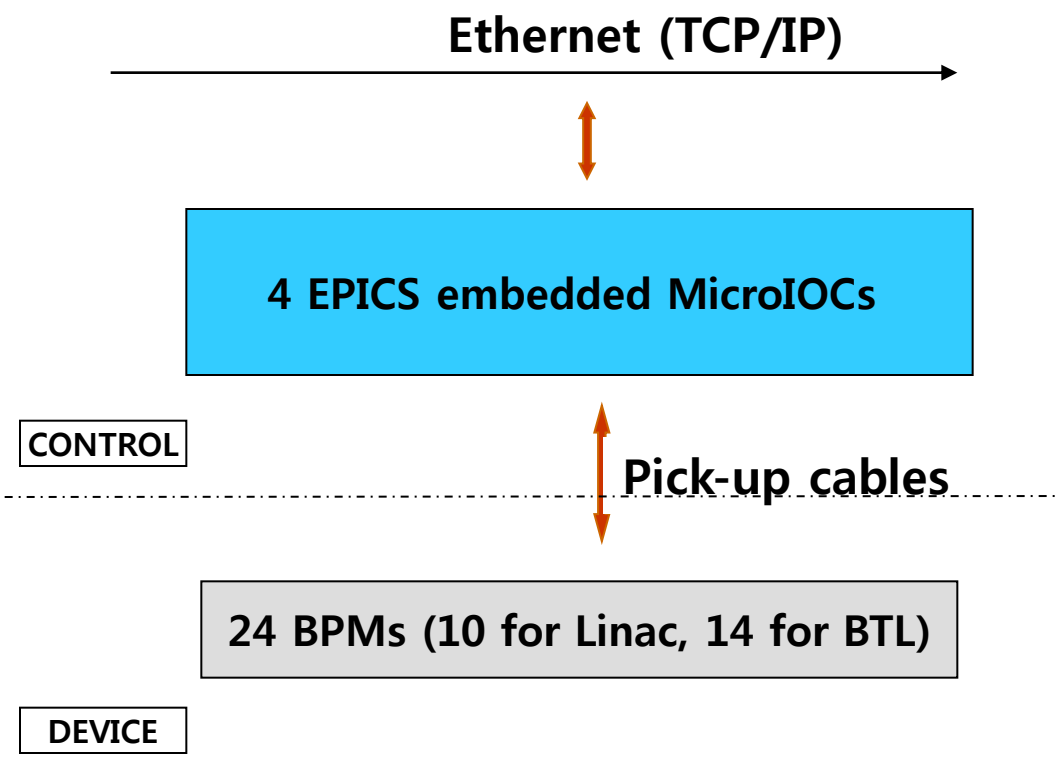


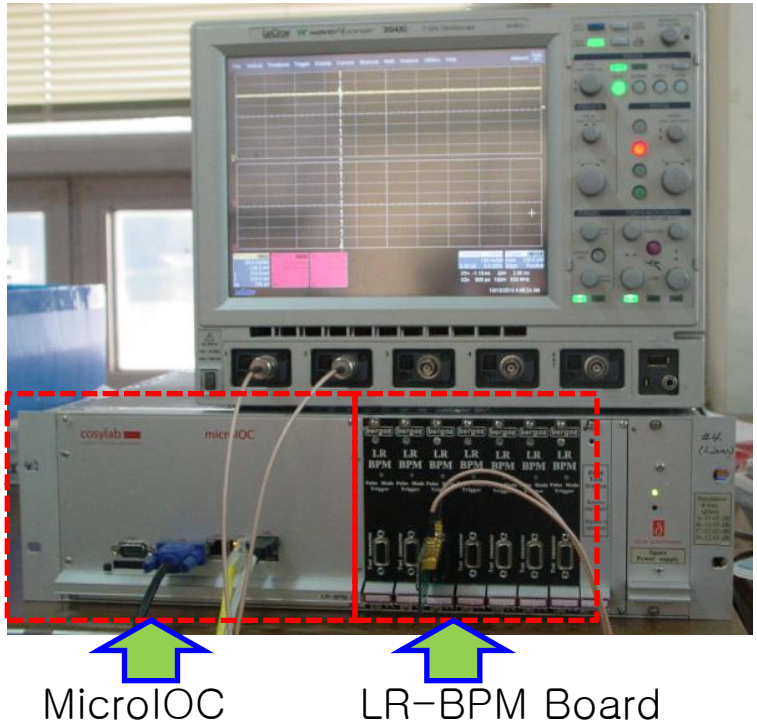

# Device Control for Storage Ring MPS

- VME IOCs (OS : vxWorks)
- EPICS Embedded Controllers
- CA-Gateways (OS : Linux)

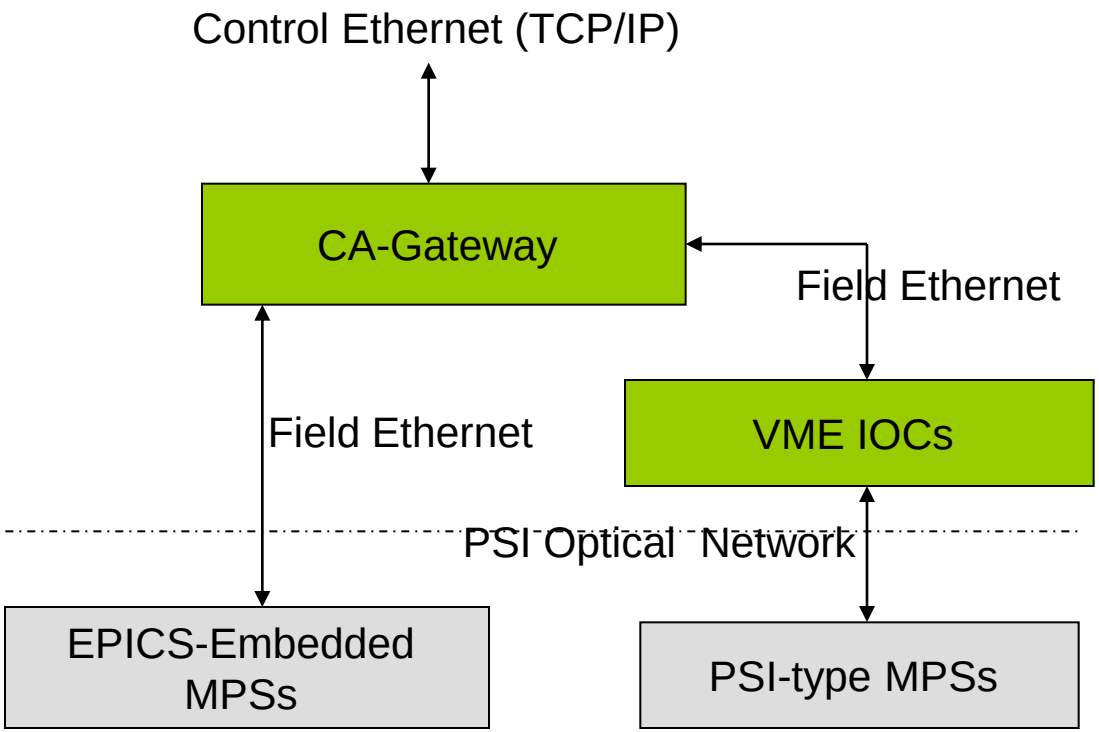

# SR Magnet Power Supply Control System

- Total 488 magnet power supplies for the PLS-II storage ring
- 296 magnet power supplies are embedded with EPICS IOCs
- 96 slow corrector vertical magnet power supplies are controlled by 12 VME IOCs with PSI interface.
- 96 fast corrector magnet power supplies are controlled by 12 VME IOCs with fast RS422 interface
- 24 VME EPICS IOCs are recycled from PLS

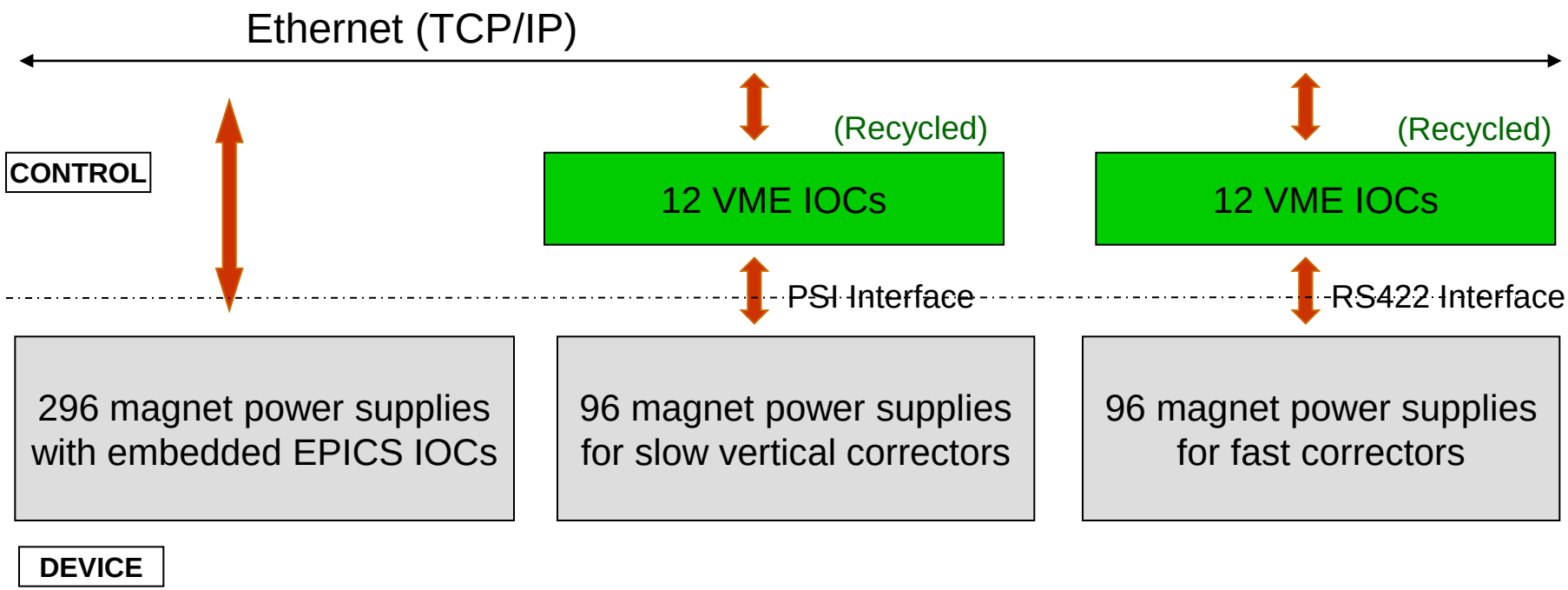

# Device Control for Storage Ring RF

- CompactPCI IOC (OS : Linux)
- VME IOC (OS : vxWorks)
- CA-Gateway (OS : Linux)
- EPICS Embedded Controller

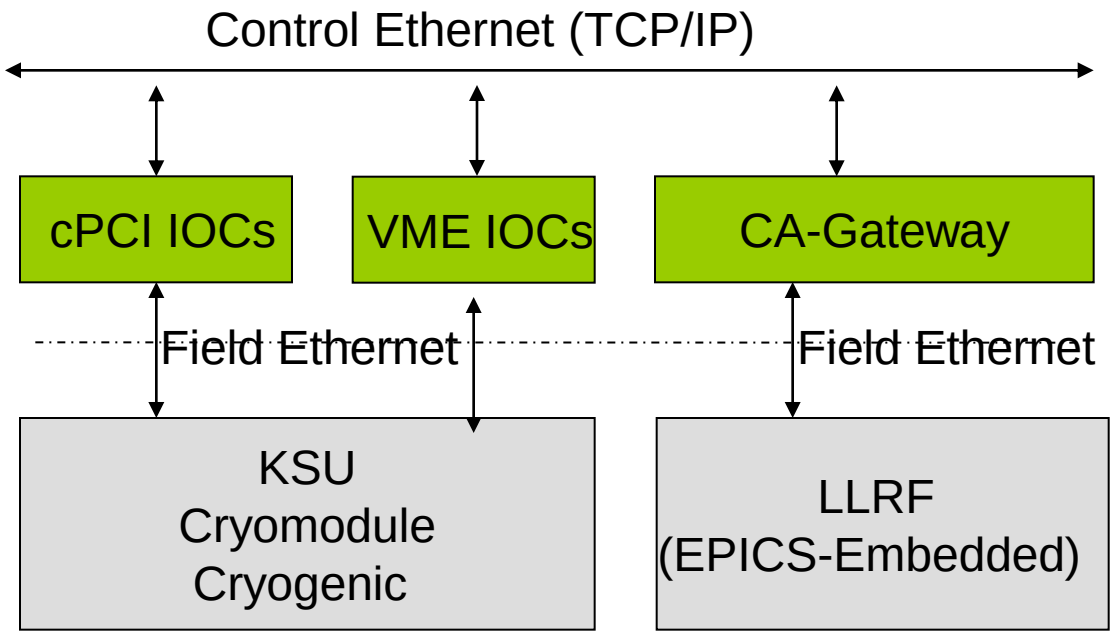

# SR RF Control System

- SR RF system :
  - KSU (Klystron Support System)
  - Cryomodule system
  - Cryogenic system
  - NC LLRF system, SC LLRF system
- KSU and Cryomodule are controlled by CompactPCI IOC through Ethernet (TCP/IP) interface
- Cryogenic system is embedded with EPICS IOC
- NC LLRF system is controlled by VME IOC recycled from PLS

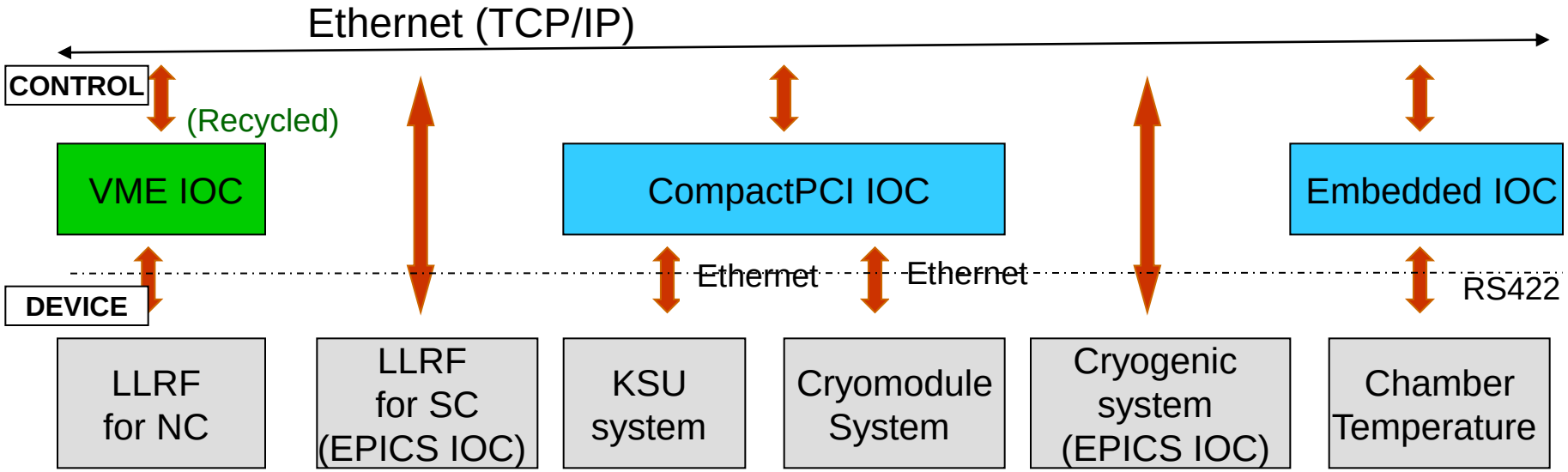

# Device Control for Storage Ring Vacuum

- EPICS Embedded Controllers

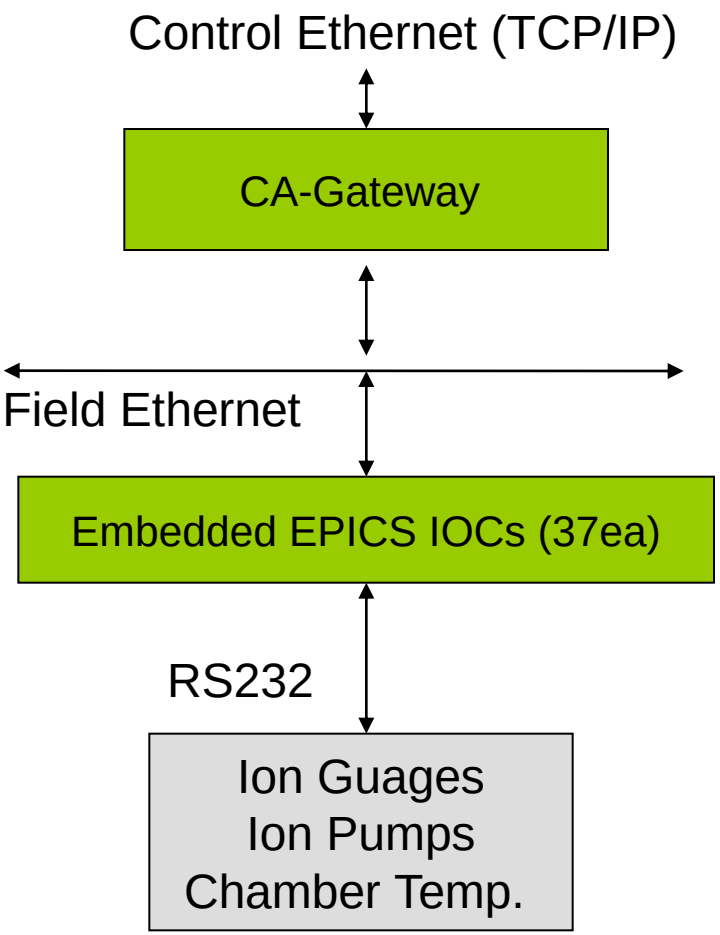

# SR Vacuum Control System

- SR Vacuum system :
  - Ion guages
  - Ion pumps
  - Chamber temperature sensors
- Ion guages are controlled by 13 embedded EPICS IOCs
- Ion pumps are controlled by embedded EPICS IOCs recycled from PLS
- Chamber temperature is monitored by 5 embedded controllers

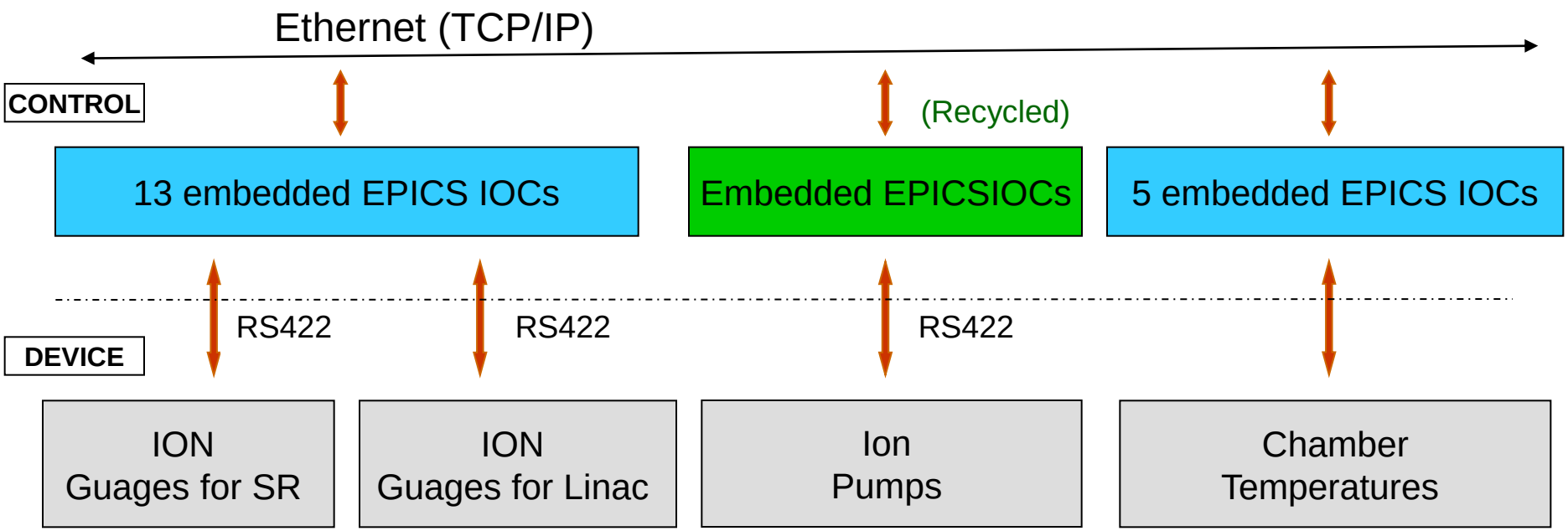

# SR Girder Control System

- SR girder system :
  - Girder vertical position control system : 216 encoders, 216 step motors
  - Girder displacement monitoring system : 48 digital probes
  - Chamber motion monitoring (VCM) system : 96 digital probes
  - HLS monitoring system : 48 HLS sensors
- Step motors are controlled by 36 embedded EPICS IOCs
- Digital probes and HLS system are monitored by 12 embedded EPICS IOCs

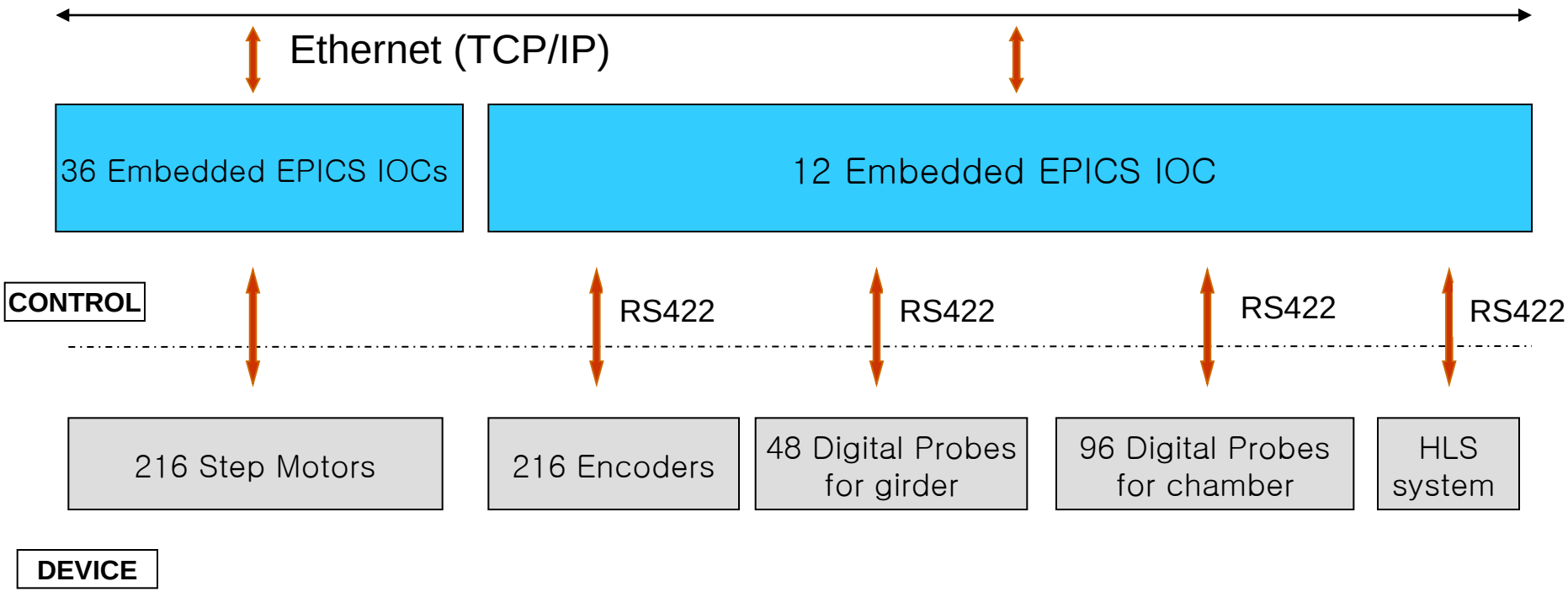

# Device Control for Storage Ring BPM

- Liberas from Instrumentation Technologies
- CA Gateway

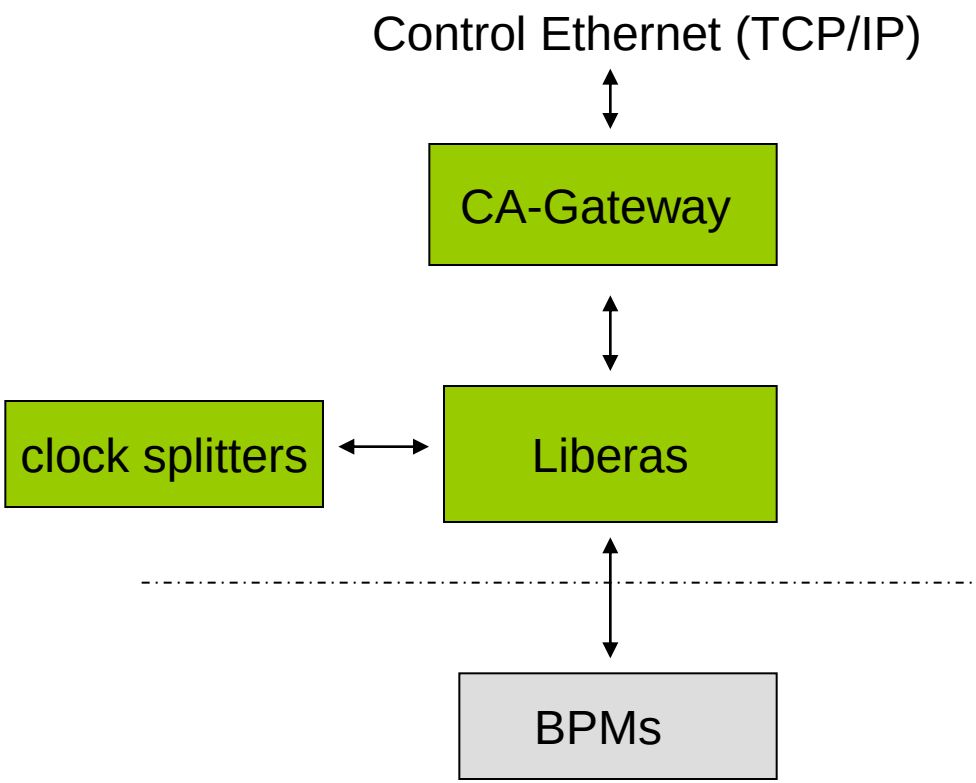

# Libera BPM Data

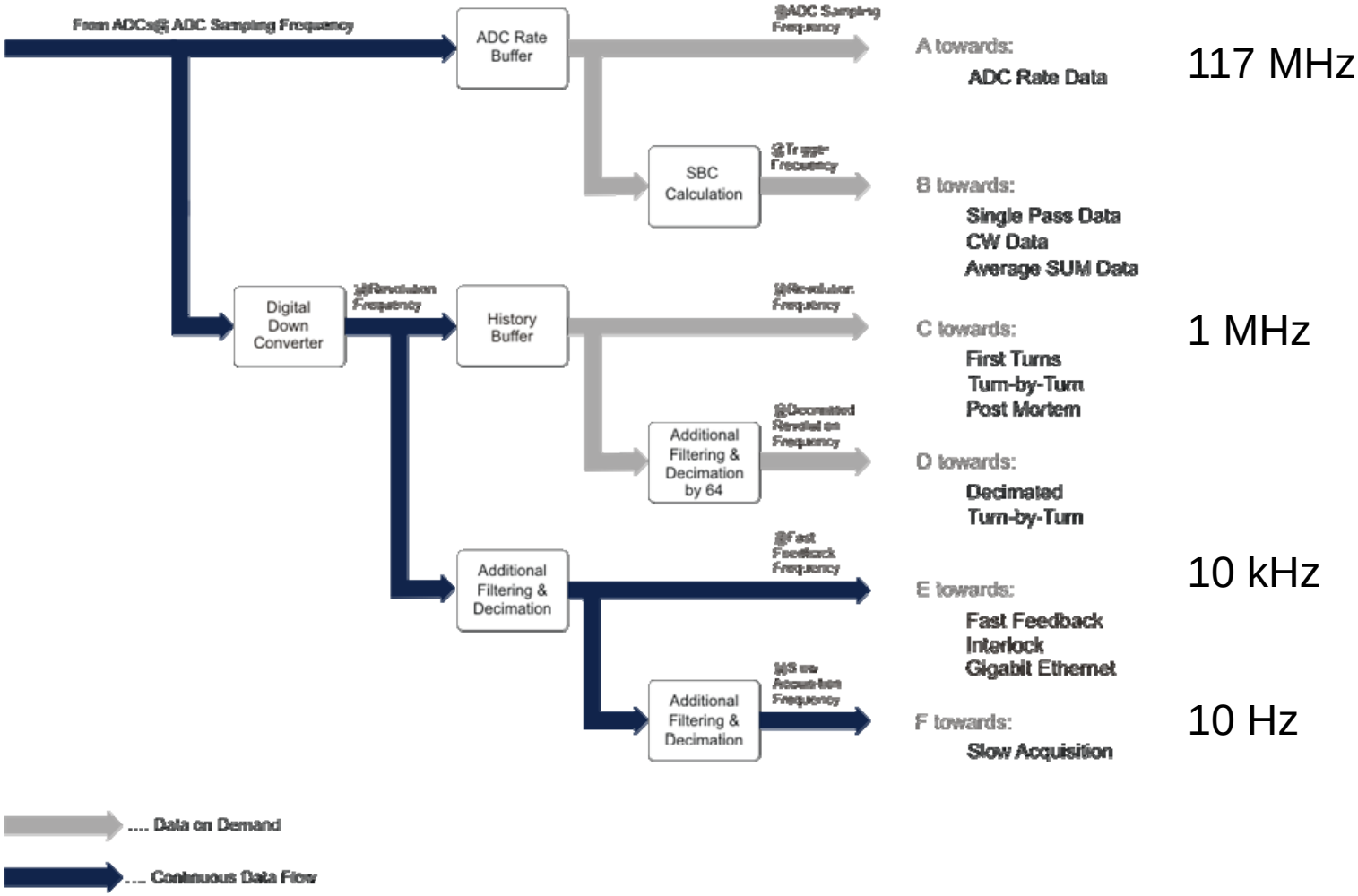


Figure 6: Parallel Wideband and Narrowband Signal Processing Paths

# SR BPM Control System

- 96 BPMs for PLS-II storage ring
- Controls for other diagnostics devices such as DCCT, BPRM, Scraper, VPM is recycled from PLS

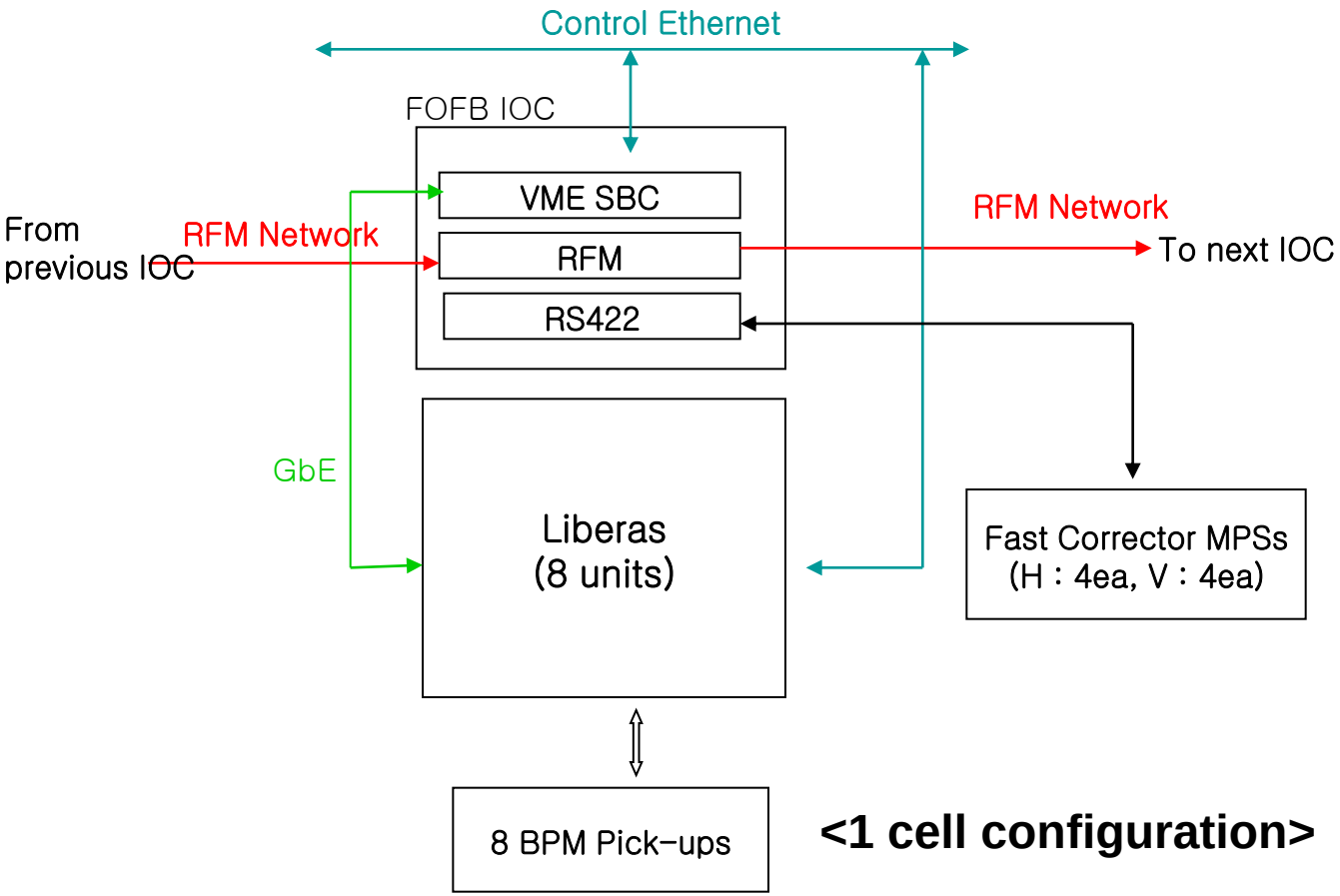


**<1 cell configuration>**

# Test result of Libera : first-turn measurement

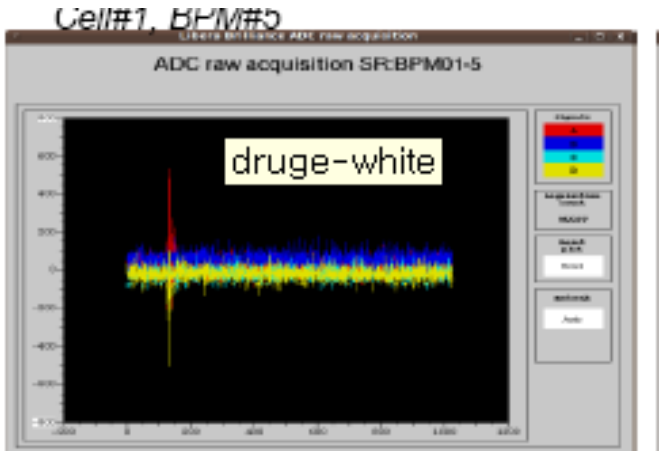


## The first turn measurements setup

- 8 Libera Brilliance units connected in the following positions:
  - SR:BPM01-5
  - SR:BPM03-5
  - SR:BPM04-5
  - SR:BPM07-6
  - SR:BPM08-5
  - SR:BPM10-5
  - SR:BPM11-5
  - SR:BPM11-6
- Screen positioned between Cell#9 and Cell#10
- Injections at 10 Hz repetition rate

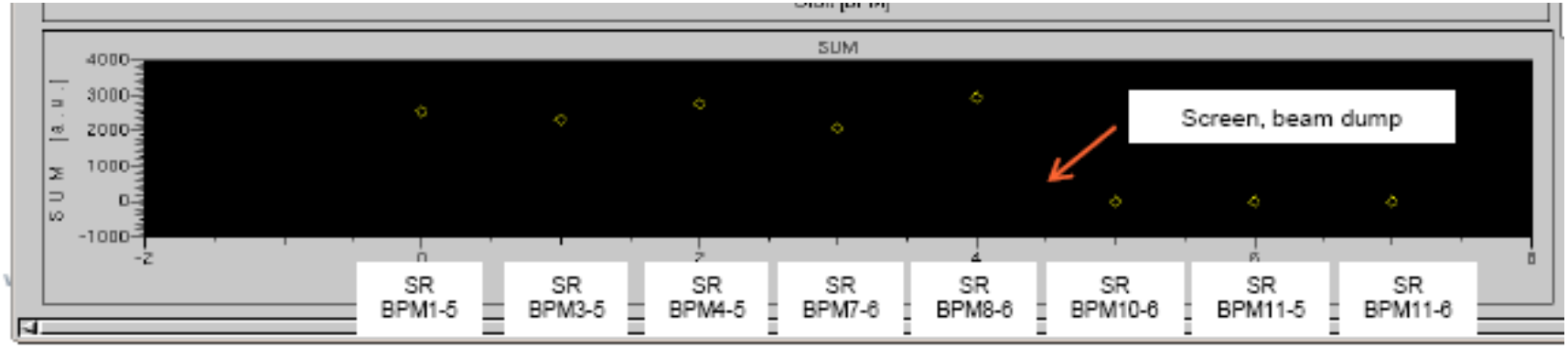

# BPM GUI Panels

## Panel for BPM (Libera) parameter

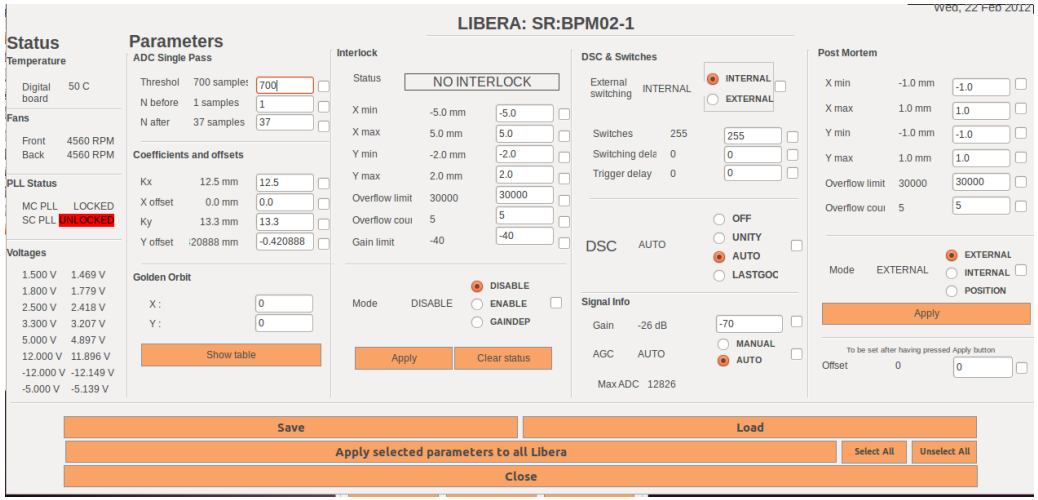


## Panel for single pass orbit

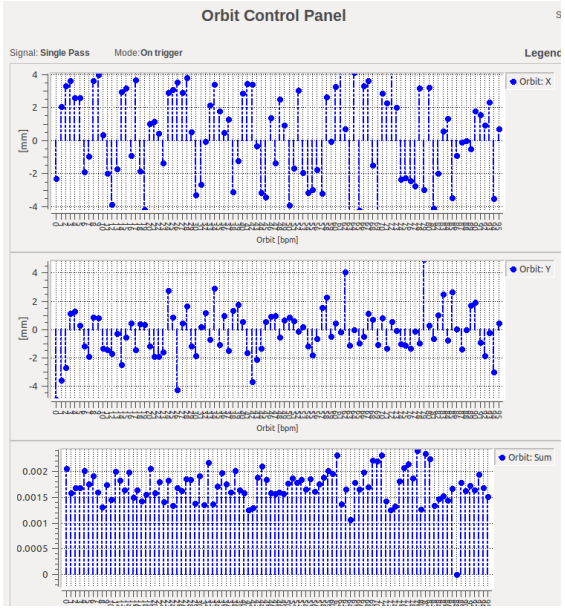


## Panel for Turn-by-Turn

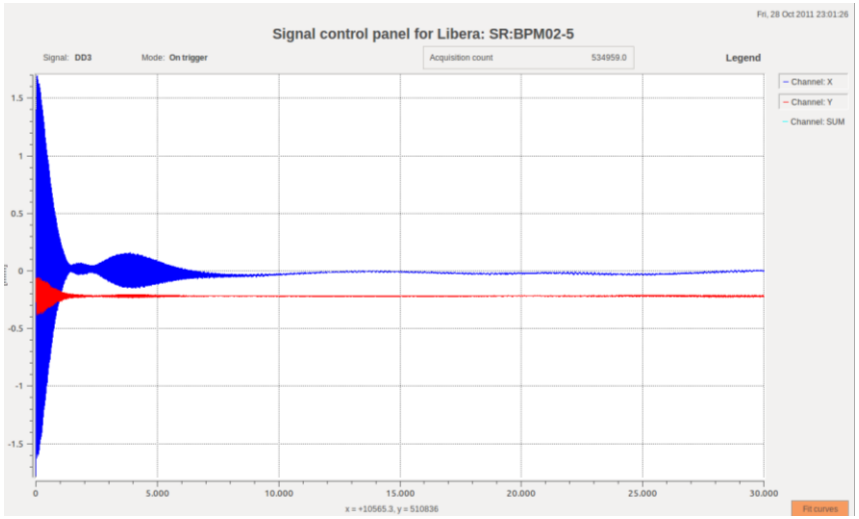


## Panel for single pass data

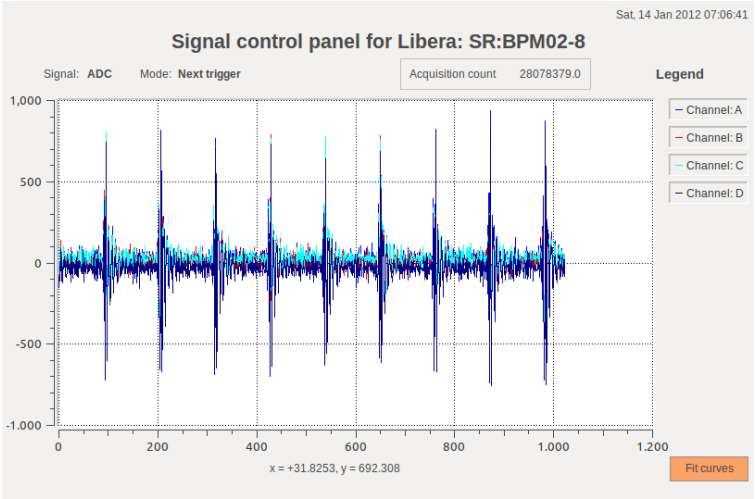

# SR PBPM Control System

- 11 new PBPMs for PLS-II
- 11 new EPICS embedded IOCs for PBPMs

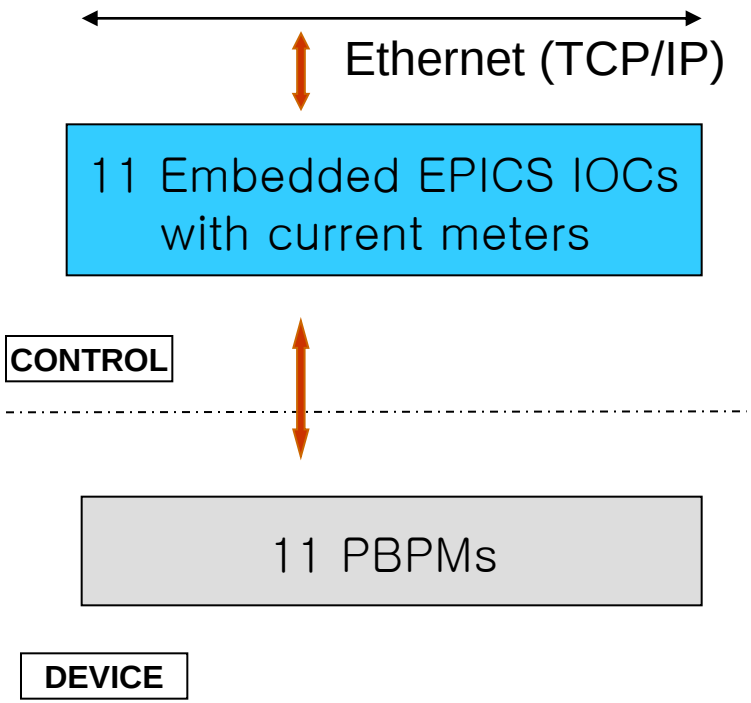


**Embedded IOC**

**Current meter**

# Contents


- Introduction of PLS-II
- Low-level Device Control System
- High-level Operator Interface System
- Event Timing System
- Machine Interlock System
- Control Network

# High-level Operation Control System

- Control Room
- Operator Interface System
- Data Management Server

# Remodeling of Main Control Room

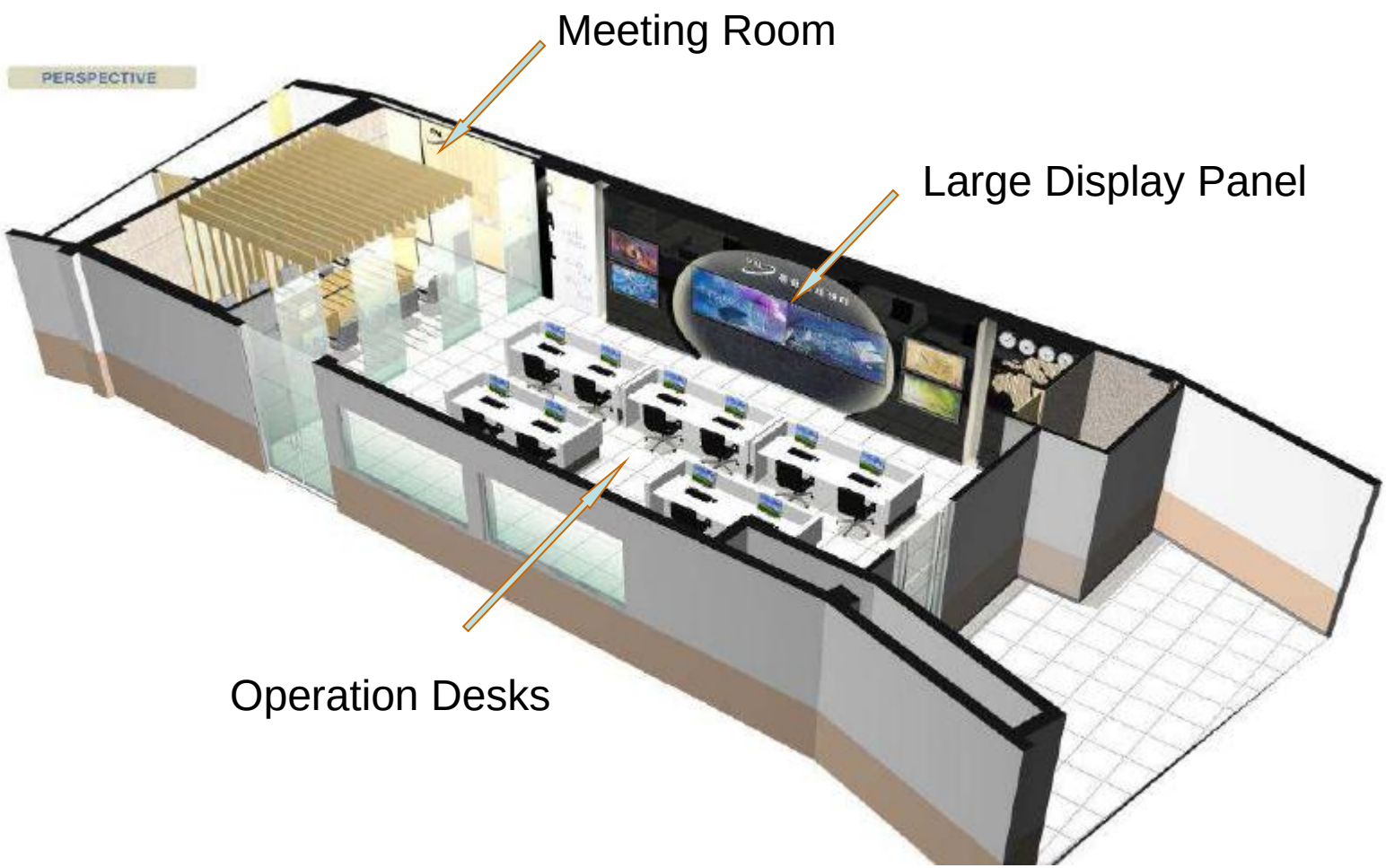

# Control Room

- Large Display Panel for Integrated Machine Information
- Operation desks with displays, meeting room, operation office

# Operator Interface (OPI) System

- Linux-based PCs
- GUI panels : EDM, MEDM, Java, Phython, Matlab

# Data Management Servers

- Matlab-middle Layer server
- EPICS PV Gateway server
- EPICS PV Web server
- NTP, DHCP, NFS, Booting, Back-up, DB server
- E-log server

# MPS GUI Panels

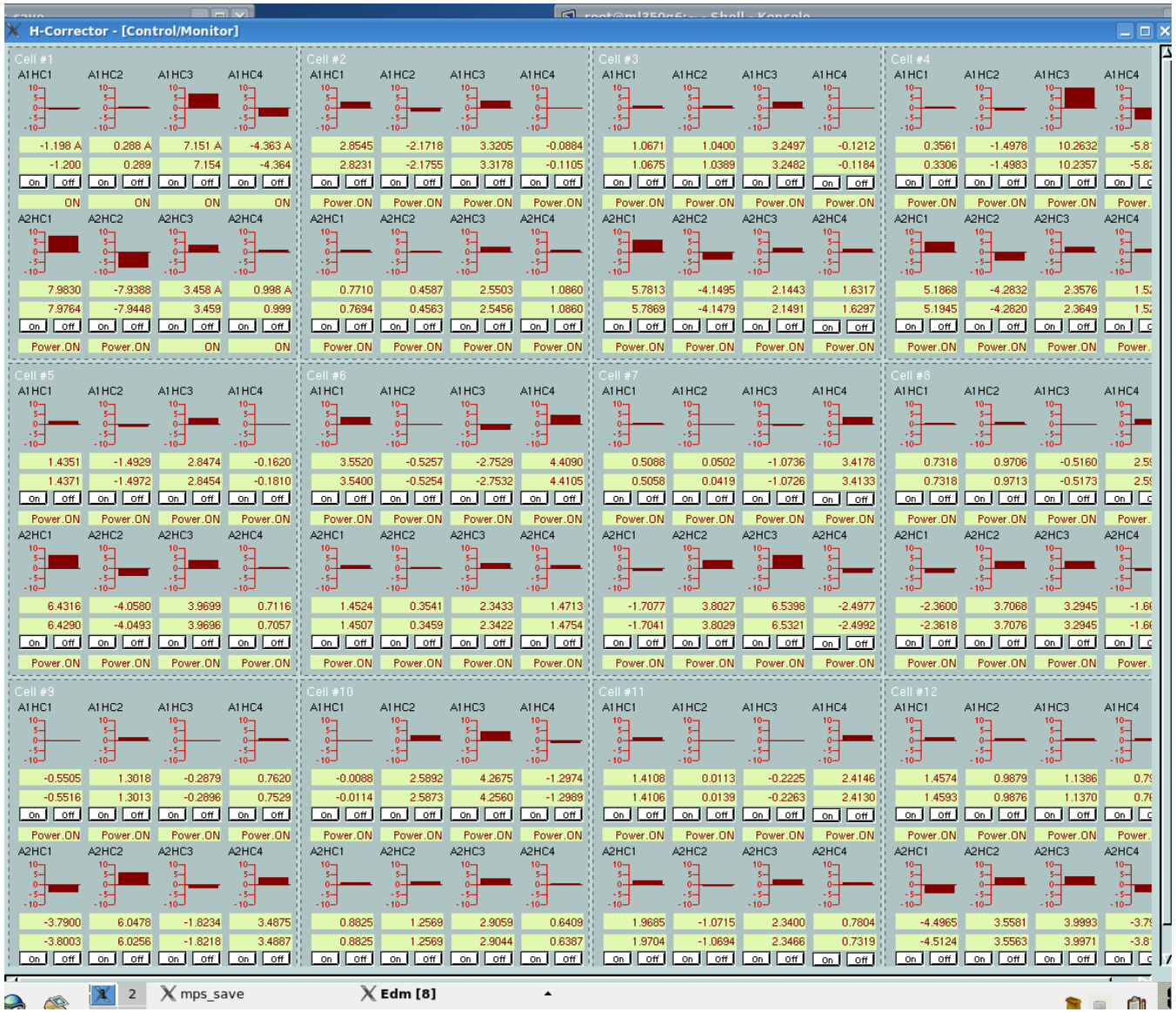

# Physics Application Support System

- All physics applications for PLS-II such as LOCO, BBA, etc. use EPICS MML and PV Gateway server environment
- A EPICS MML (Matlab-based middle-layer) server is reused from PLS
- A EPICS PV Gateway server is also reused from PLS
- PLS MML and Gateway server environment are expanded and upgraded for PLS-II

# Environment of EPICS MML Server for PLS

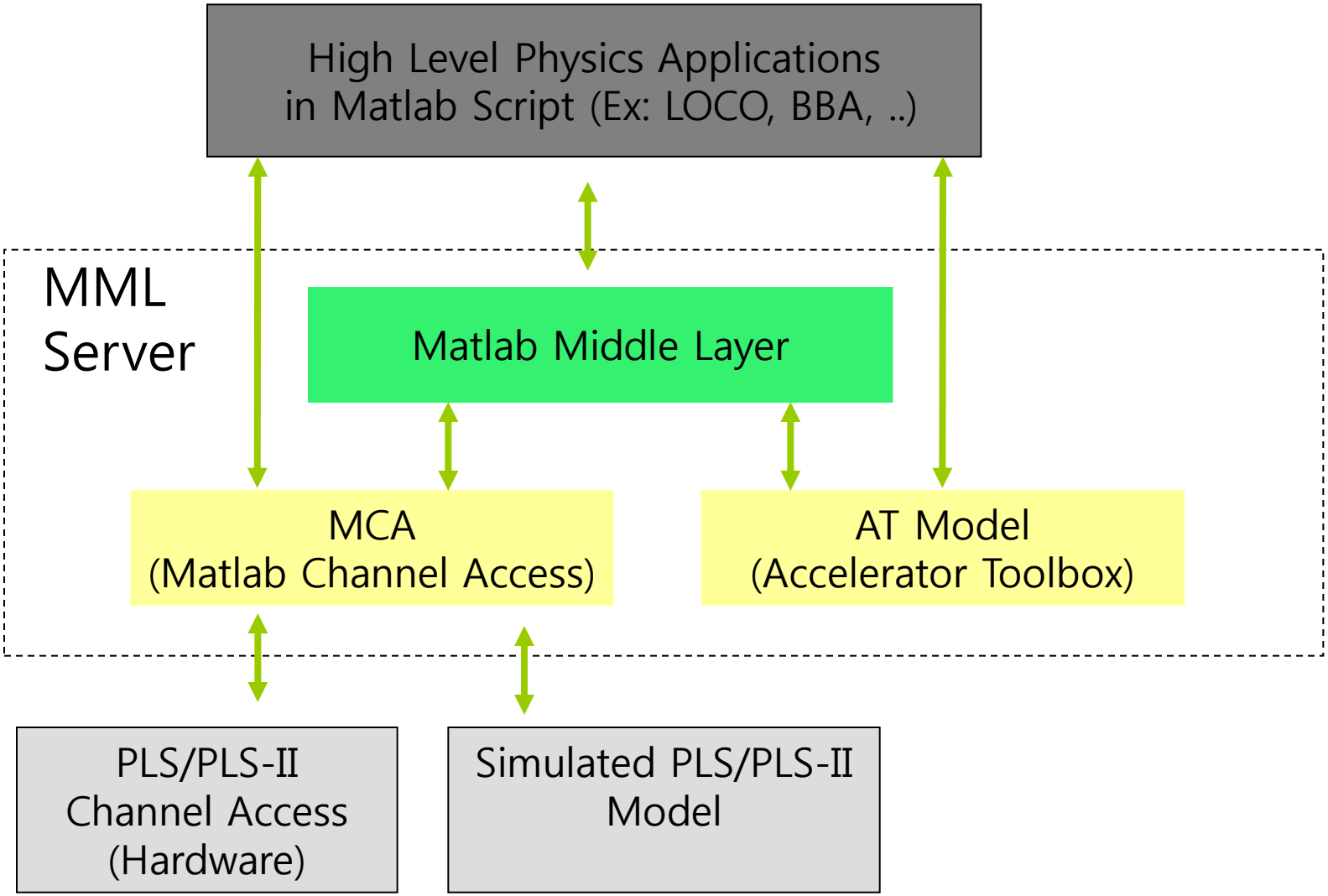

# Data Management System

- Physics database is developed by using ORACLE database server
- Web IOC server is upgraded for PLS-II
- Time server for PLS is recycled for PLS-II
- FTP server for PLS is recycled for PLS-II
- NFS server for PLS is recycled for PLS-II
- File backup server for PLS-II is installed and set-up

# EPICS PV Web Server

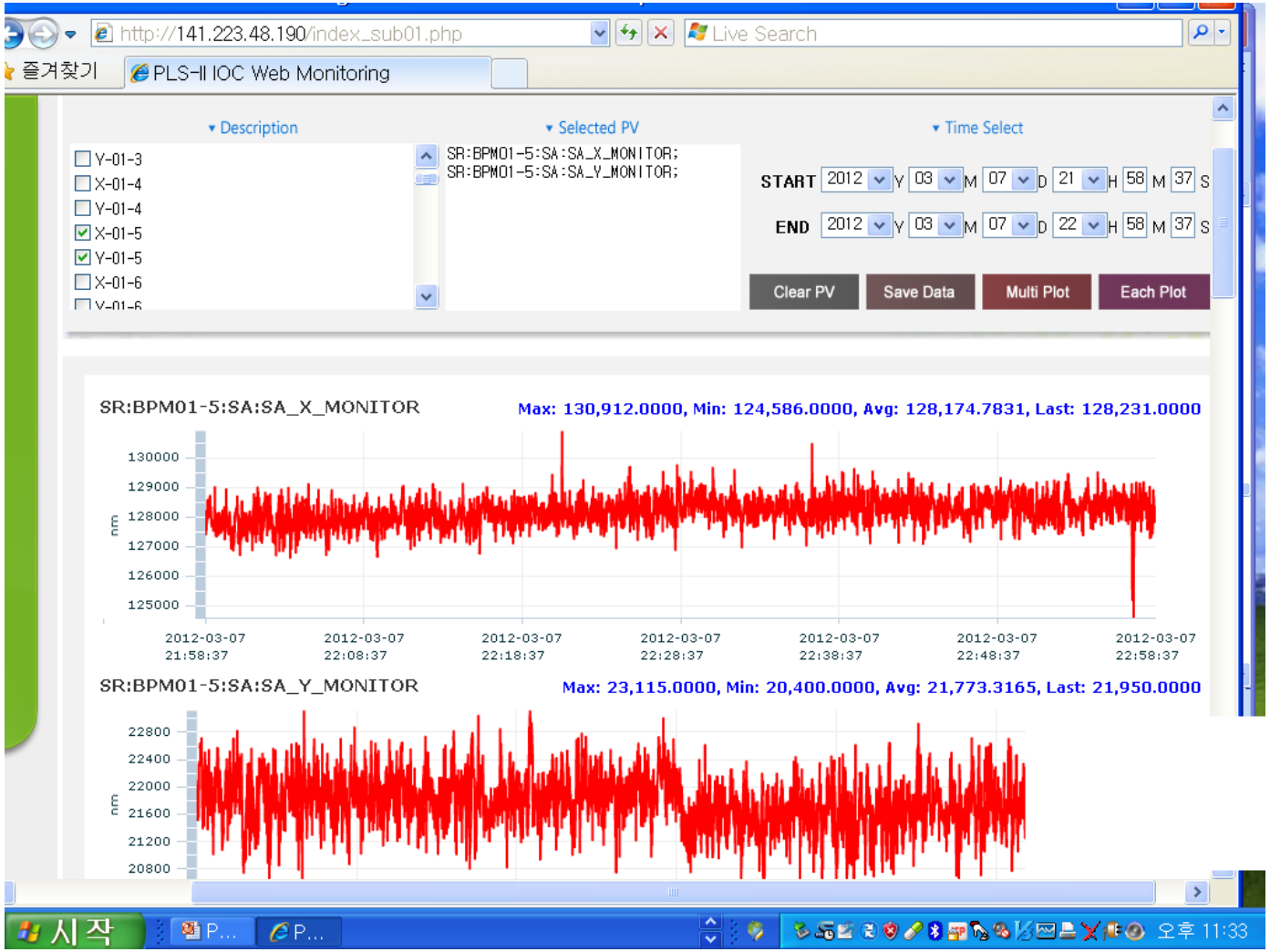

# PLS-II E-log

ELOG demo – Windows Internet Explorer

http://141.223.47.50:8080/demo/

demo

General linux tips & tricks, Page 1 of 20

New | Find | Select | Import | Config | Last day | Help

Full | Summary | Threaded

-- All entries -- | -- Type -- | Search | 391 Entries

Goto page 1, 2, 3 ... 18, 19, 20 Next All

| ID | Date | Author | Type | Category | Subject | Text |
|---|---|---|---|---|---|---|
| 399 | 3/7/2012 11:07:15 PM | J. Y. Choi, S. D. Jang | Commissioning | Injector Commissioning | 2012. 3. 7. Day Shift | [Goal]<br>* Enhance Injection Efficiency over to 40% (with M. G. Kim) |
| 398 | 3/7/2012 8:13:32 AM | B.Park/S.Shin | Commissioning | Beamline commissioning | Beam line commissioning | Goal : Beam line commissioning<br>What happen : See attachment |
| 397 | 3/6/2012 12:46:33 PM | G.H. Kim / H.S. Lee | Commissioning | SR commissioning | day shift | [GOAL]<br>Operation for beamline<br>7B beam-line tuning |
| 396 | 3/6/2012 9:27:37 AM | C. Kim, H. J. Choi | Linac Commissioning | LINAC | 3/5 Day Shift | [Goal]<br>Beamline<br>commissioning and BTL machine study |
| 395 | 3/6/2012 8:48:40 AM | S.C.Kim | MPS | Hardware | linac FS21, SC01V control problem solving | linac FS21 and SC01V MPS control problem solving<br>>>>>> see attached |
| 394 | 3/6/2012 1:00:51 AM | B.-J. Lee and S. J. Kwon | Commissioning | SR commissioning | BTL trajectory correction and SR commissioning | 1. Goal:<br>~ 00:00] BTL trajectory correction and |
| 393 | 3/5/2012 7:31:35 PM | S.C.Kim | MPS | General | MPS operation check list | MPS operation check list<br>>>>>> see attached |
| 392 | 3/5/2012 6:06:24 PM | S.C.Kim | MPS | Hardware | 2012-0304 SR unipolar MPS operation | 2012 03/04<br>SR unipolar MPS operation status<br>>>>>> see attached |
| | | | | | SR corrector MPS operation | SR corrector MPS operation status |

# Contents


- Introduction of PLS-II
- Low-level Device Control System
- High-level Operator Interface System
- Event Timing System
- Machine Interlock System
- Control Network

# Tming System

- EVG(Event Generation System)
- EVR(Event Receiving System)
- VME IOC (OS : vxWorks)
- Jitter between E-gun trigger and RF : < 10 ps

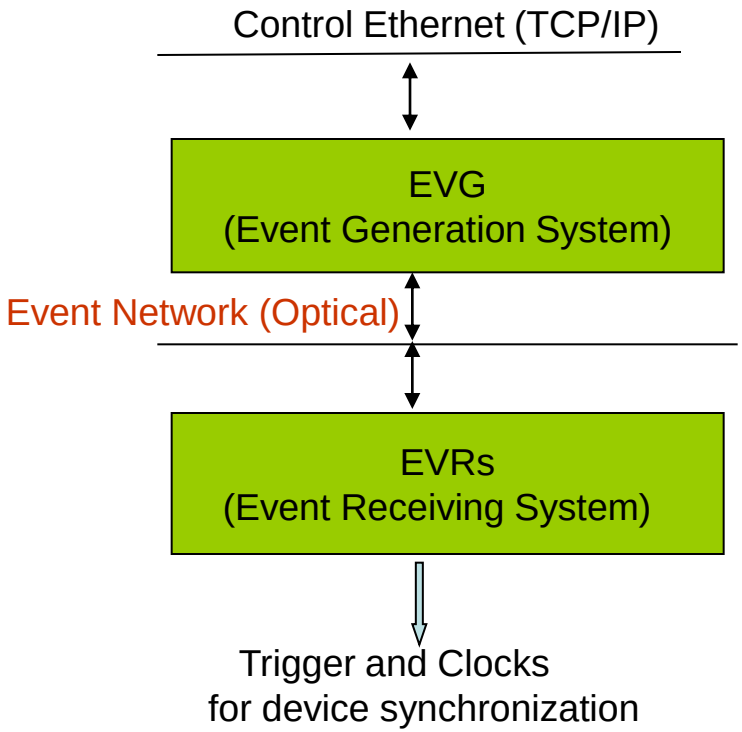


EVG

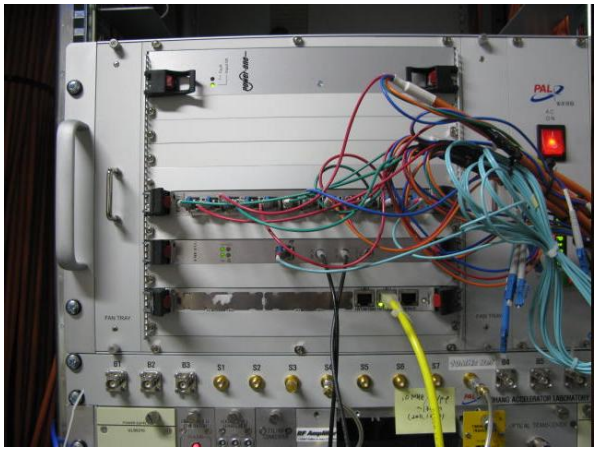

EVR

# Event Trigger System

- Collaboration with SSRF
- 1 EVG IOC, 15 EVR IOCs

**1. LINAC**
**-> 1Fanout Installation**
**->1) 1VME Installation**
**2) EVR230RF Install E-gun and M&K**
**2. Storage Ring**
**-> 2Fanout Installation**
**-> 12EVR Installation (use VME System of BPM)**
**3. Beamline**
**-> 1Fanout Installation**
**->1 EVR230RF Installation for Kicker**

Second level brunches, ~300m
Third level brunches, ~70m

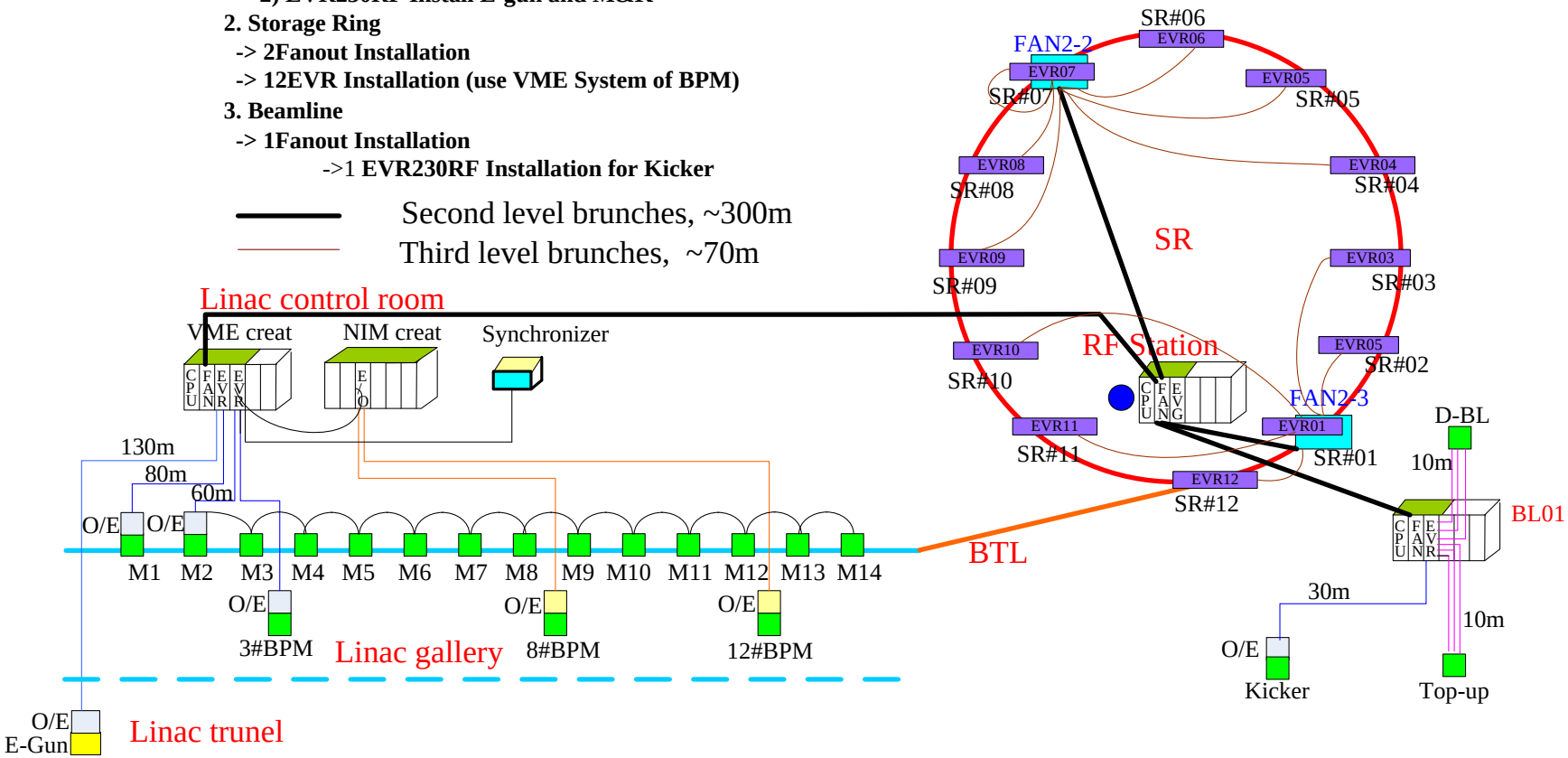


Structure of PLS-II event-based trigger system

# Field Test Result of Event Trigger System

- Field-test in Sep @ PLS machine
- 1 EVG IOC, 2 EVR IOC
- Gun trigger, Kicker trigger, modulator trigger

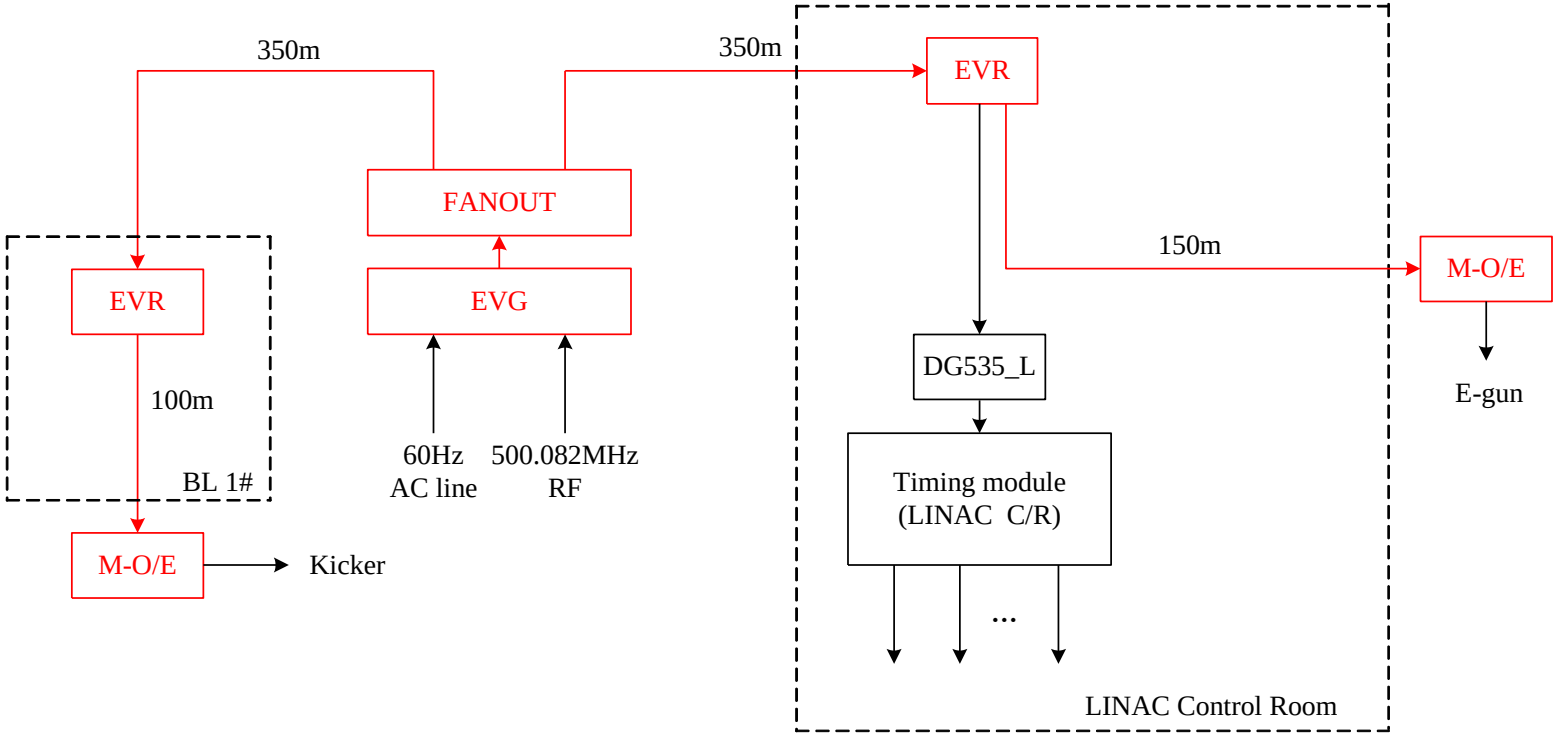


Diagram of event trigger system for field test at PLS machine

# Field Test Result of Event Trigger System

- single bunch beam injection, bucket selection
- jitter (from RF to Gun) : ~7 ps RMS

**EVG IOC**

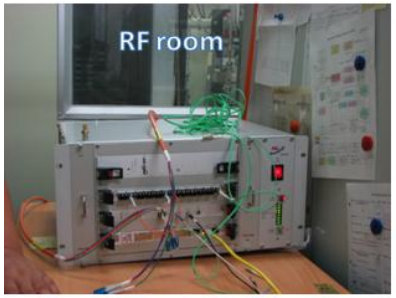


**EVR IOC for Gun**

**EVR IOC for Kicker**

**OPI EDM panel for EVG**

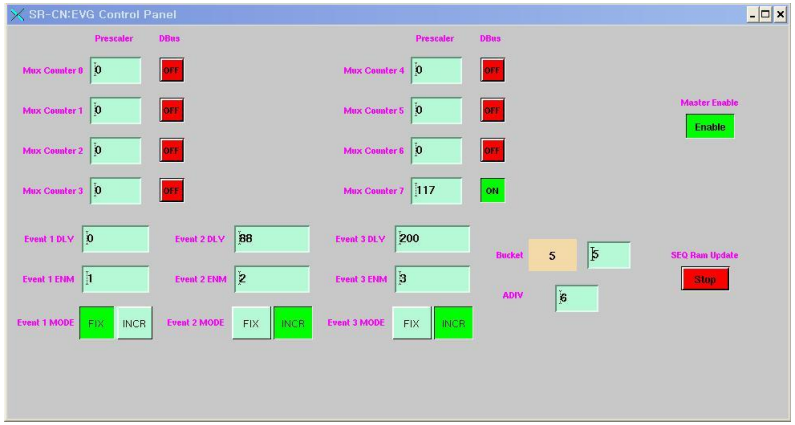


**OPI EDM panel for EVR**

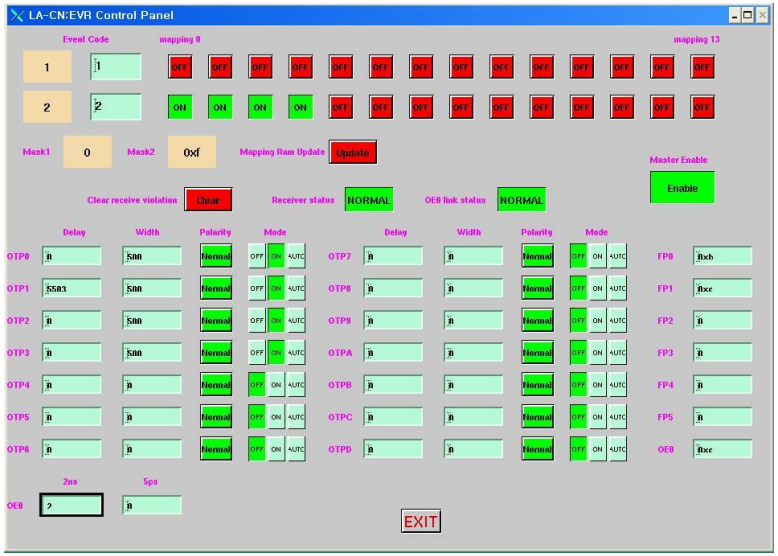

# Event Timing GUI Panels

GUI Panel for EVG

GUI Panel for EVR

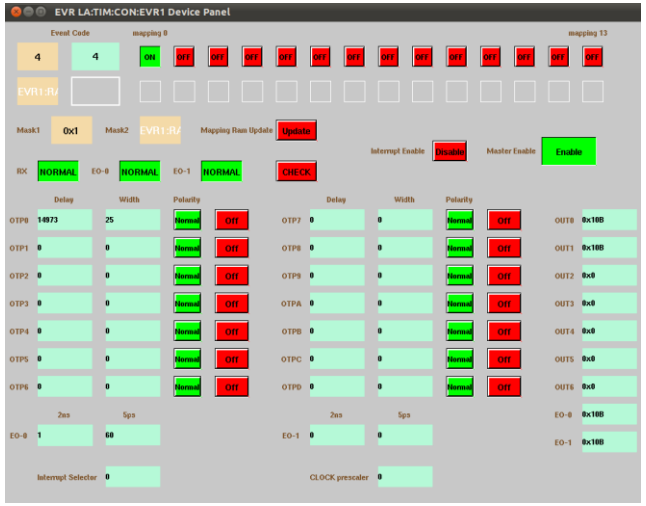


GUI Panel for multi-bunch Injection Control

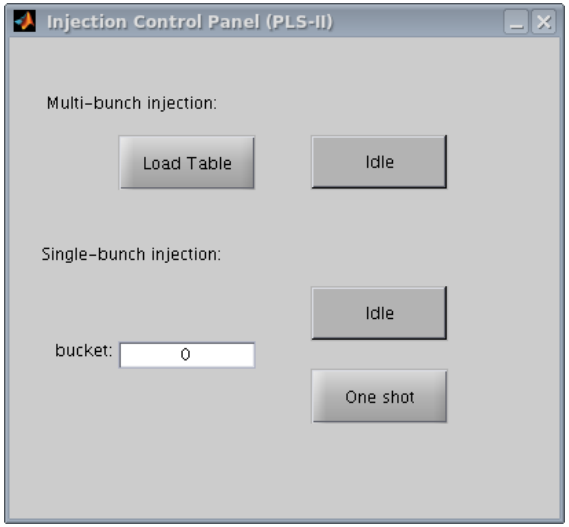

# Contents


- Introduction of PLS-II
- Low-level Device Control System
- High-level Operator Interface System
- Event Timing System
- Machine Interlock System
- Control Network

# Machine Interlock System

- Supervisory station and local stations
- PLC (Programmable Logic Controller)
- HMI IOC : Graphic GUI panel and EPICS PVs

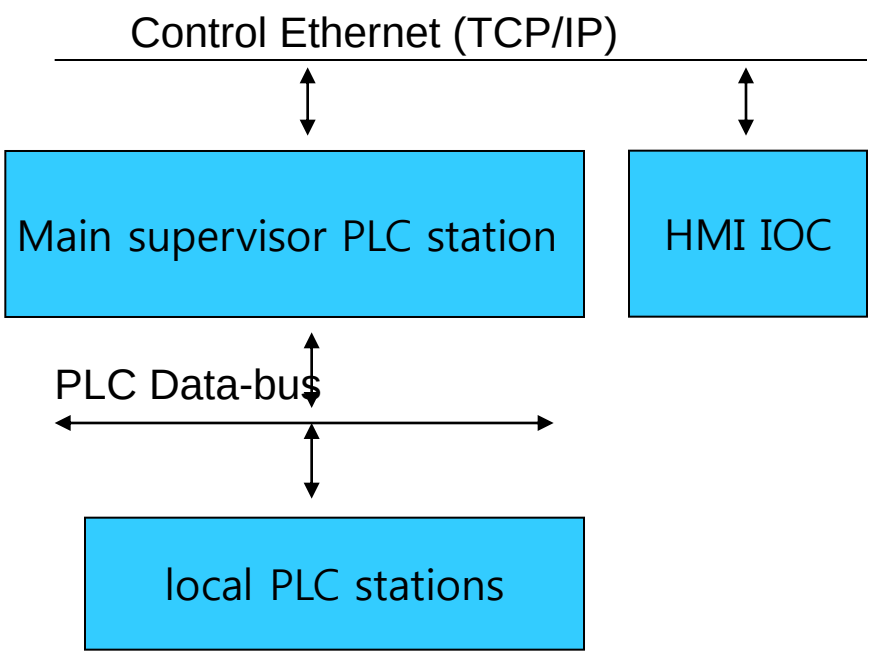

# Machine Interlock System

- Gefanuc PLCs is used for machine interlocking system
- 4 local PLC stations of SR is recycled for PLS-II
- 8 new local PLC stations is added for storage ring
- 2 local PLC stations of Linac is recycled for PLS-II
- Supervisor system of PLS is upgraded for PLS-II

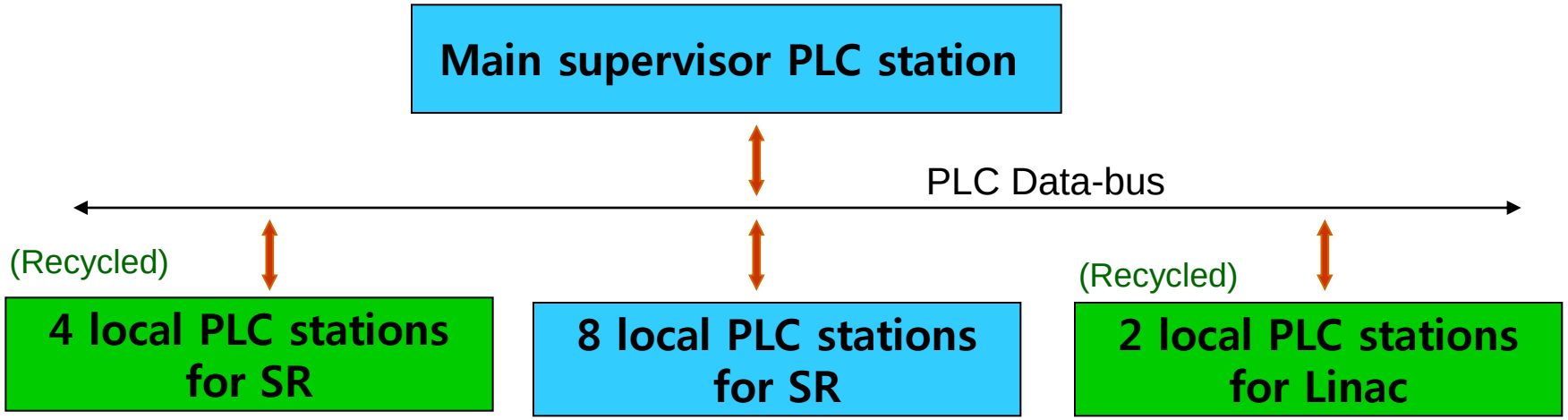

# GUI Panel for MIS

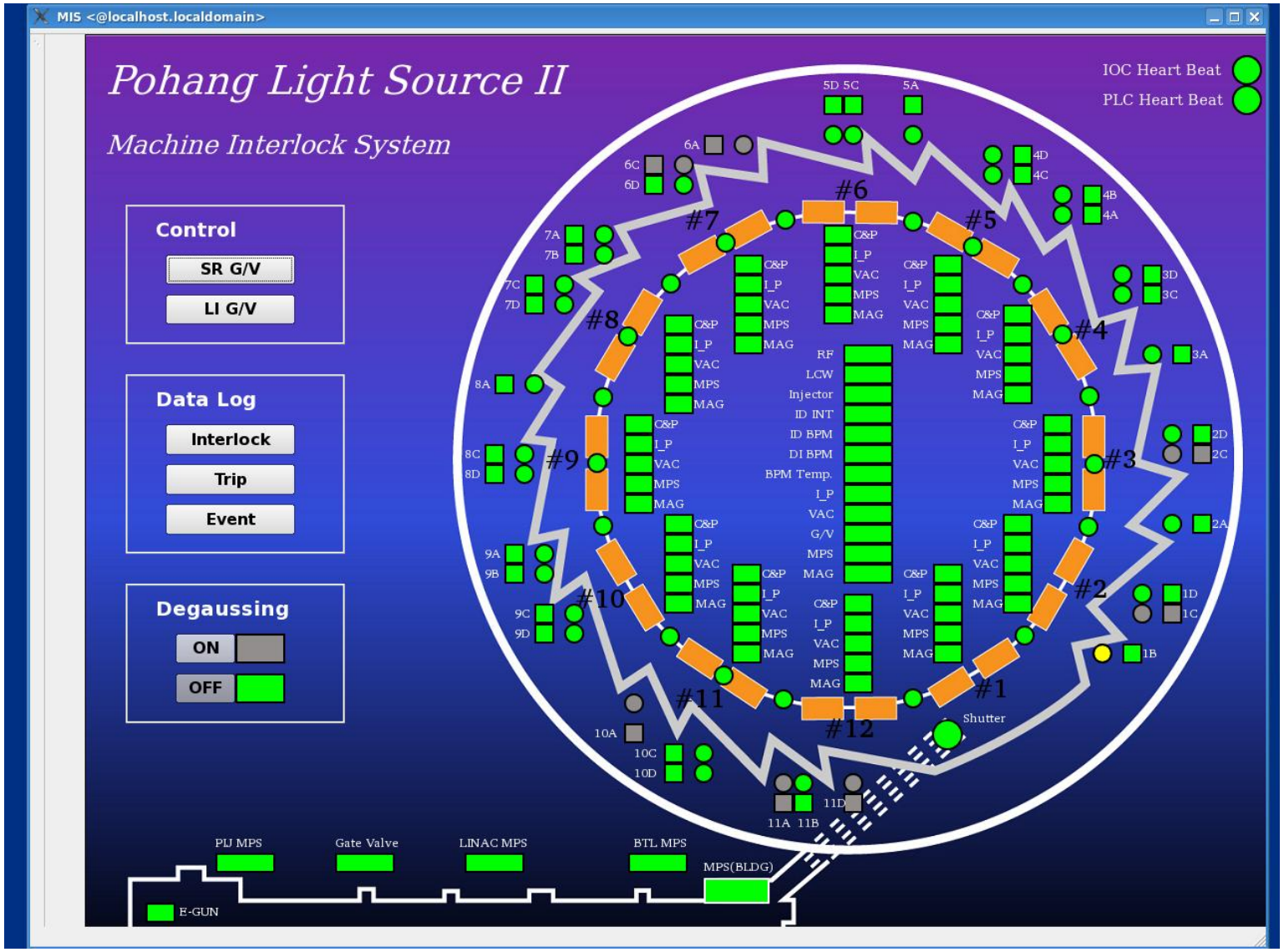

# Contents


- Introduction of PLS-II
- Low-level Device Control System
- High-level Operator Interface System
- Event Timing System
- Machine Interlock System
- Control Network

# Control Network

- 1 Giga bandwidth @ end points
- Field Ethernet and CA gateways to support many embedded IOCs

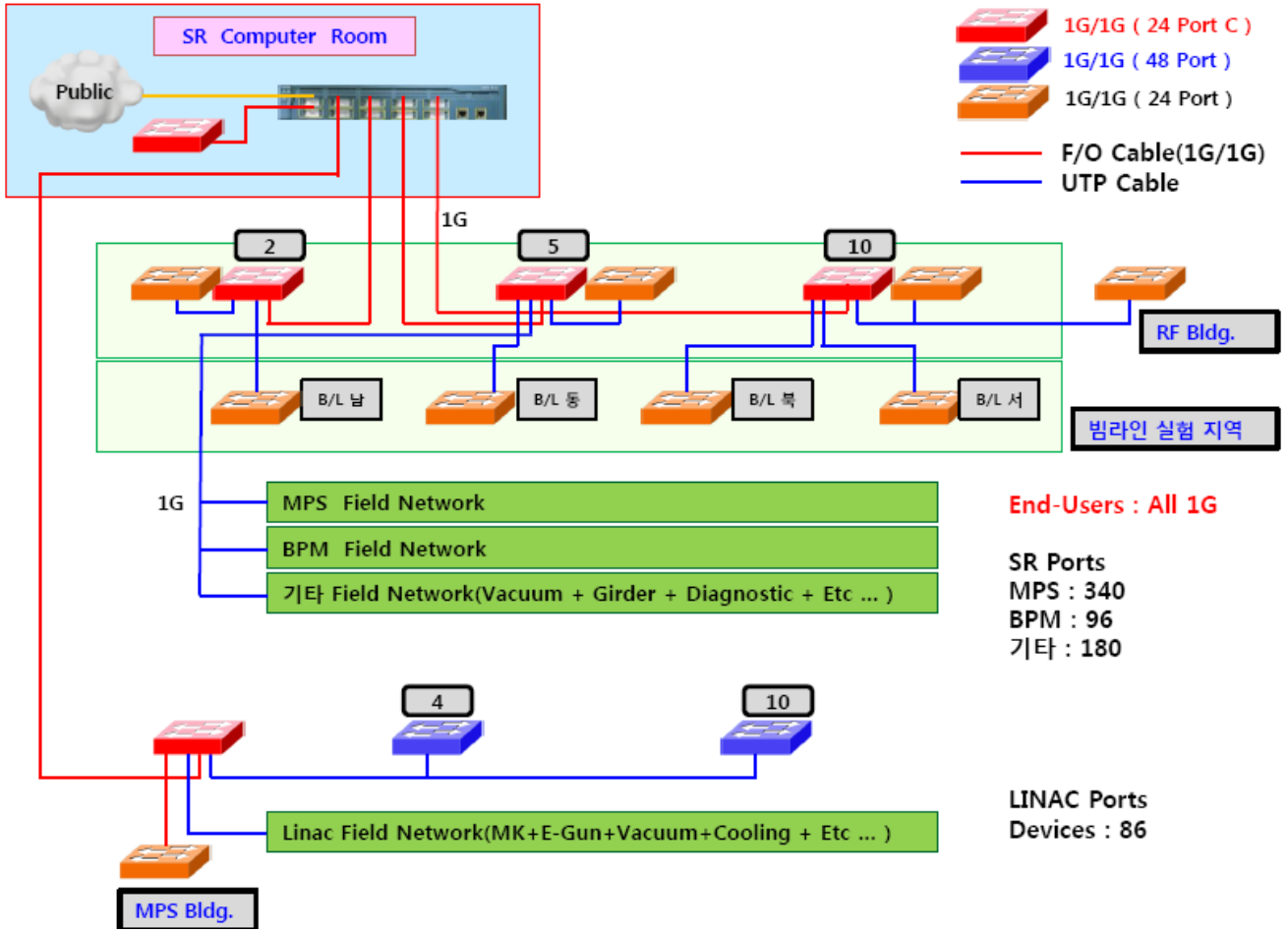


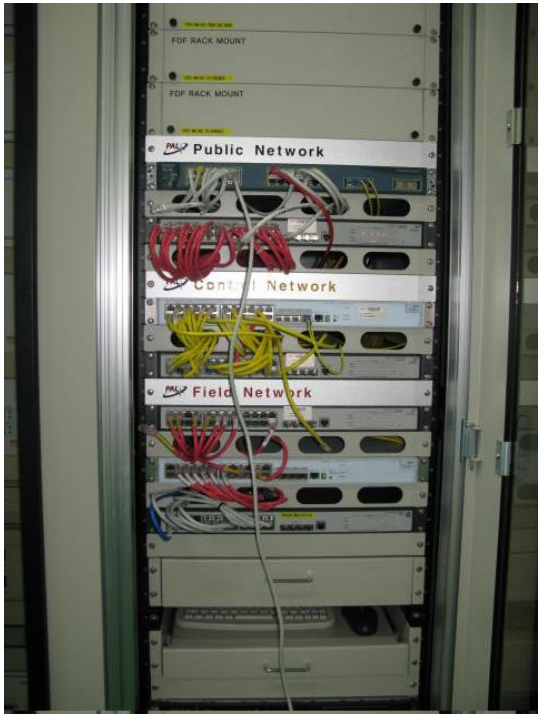

***Thank you for your attention***