Status of ITER Core Software (“CODAC Core System”)

CHD/CIT/CODAC

ITER Organization

ITER Instrumentation & Control Architecture

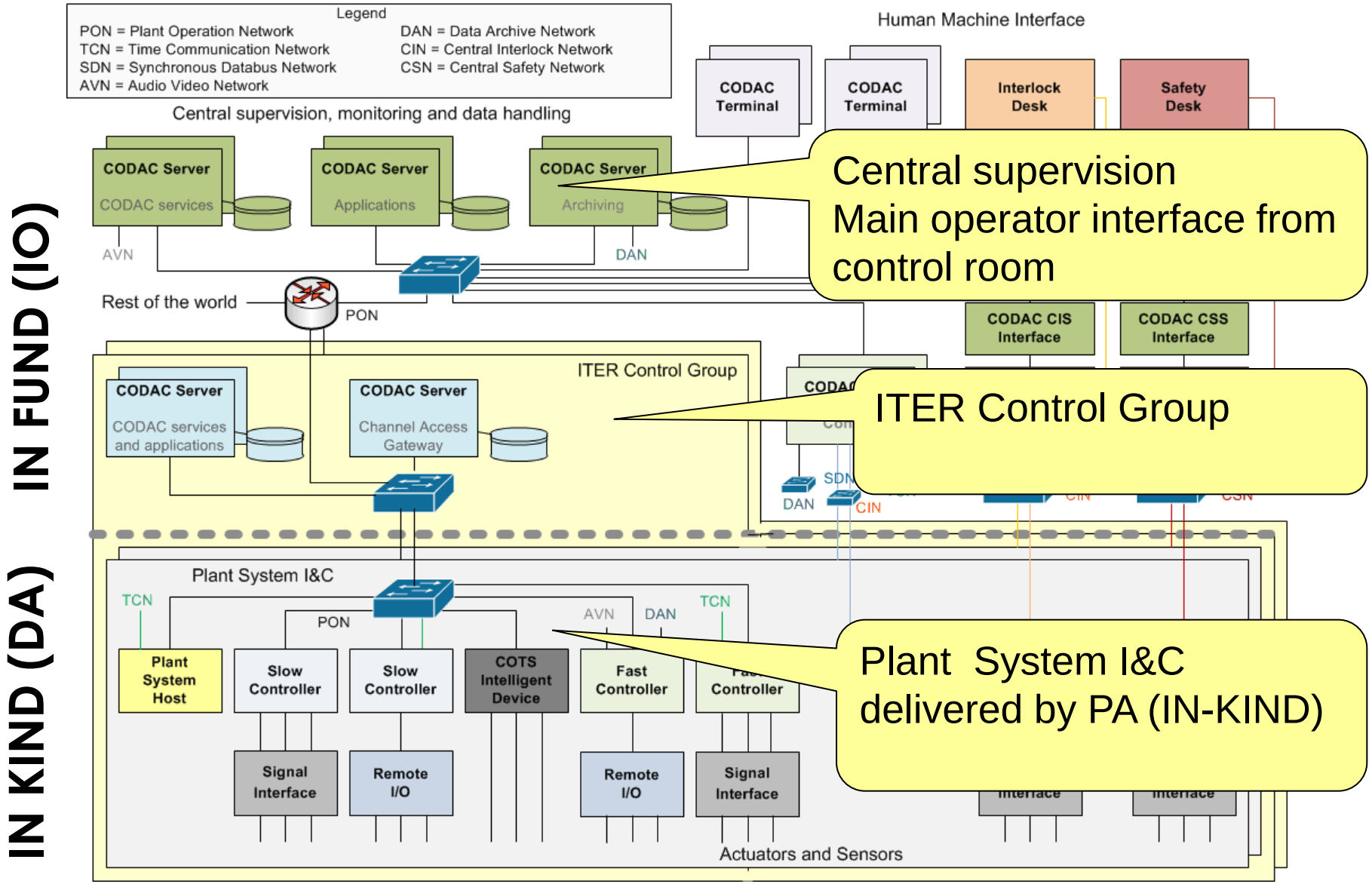

ITER Architecture

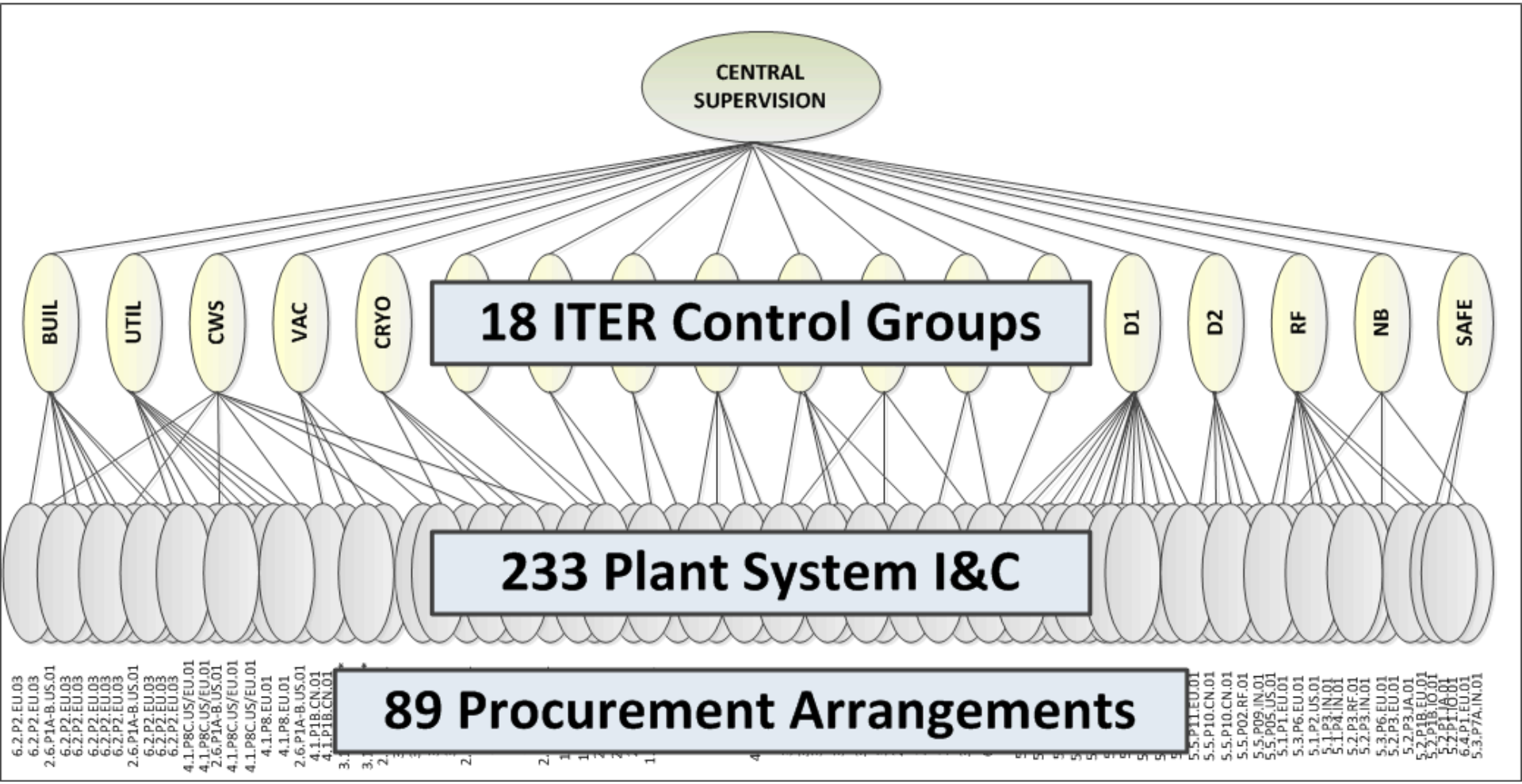

The main challenge for CODAC is **INTEGRATION**

MITIGATION

- Define standards, specifications and interfaces applicable to all plant systems Instrumentation & Control (PCDH)

Integration

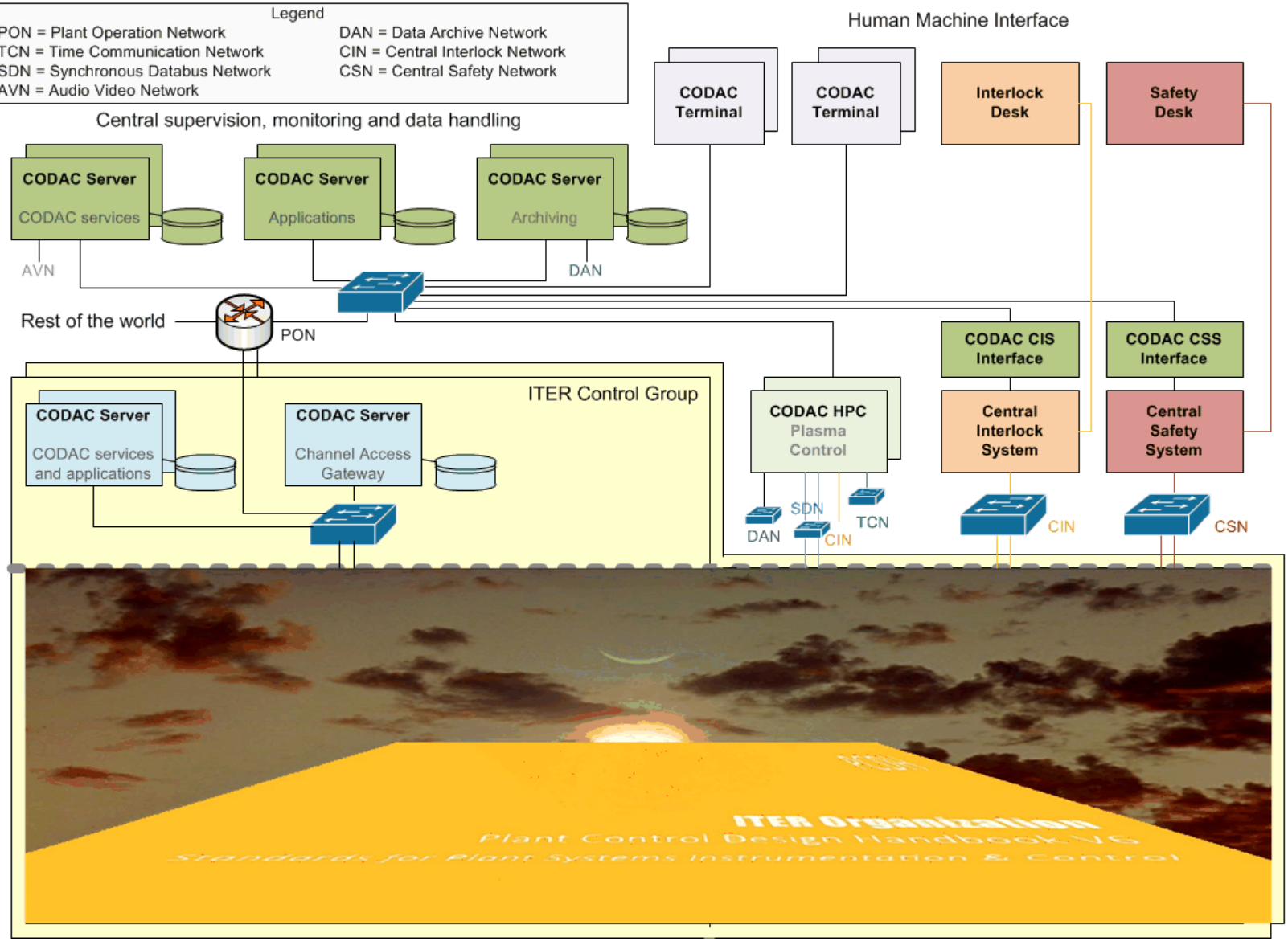

The main challenge for CODAC is **INTEGRATION**

MITIGATION

- Define standards, specifications and interfaces applicable to all plant systems instrumentation and control (PCDH)
- Develop and distribute a control system framework that implements standards and guarantees that the local control system can be integrated into the central system (CODAC Core System)

CODAC Core System Deployment

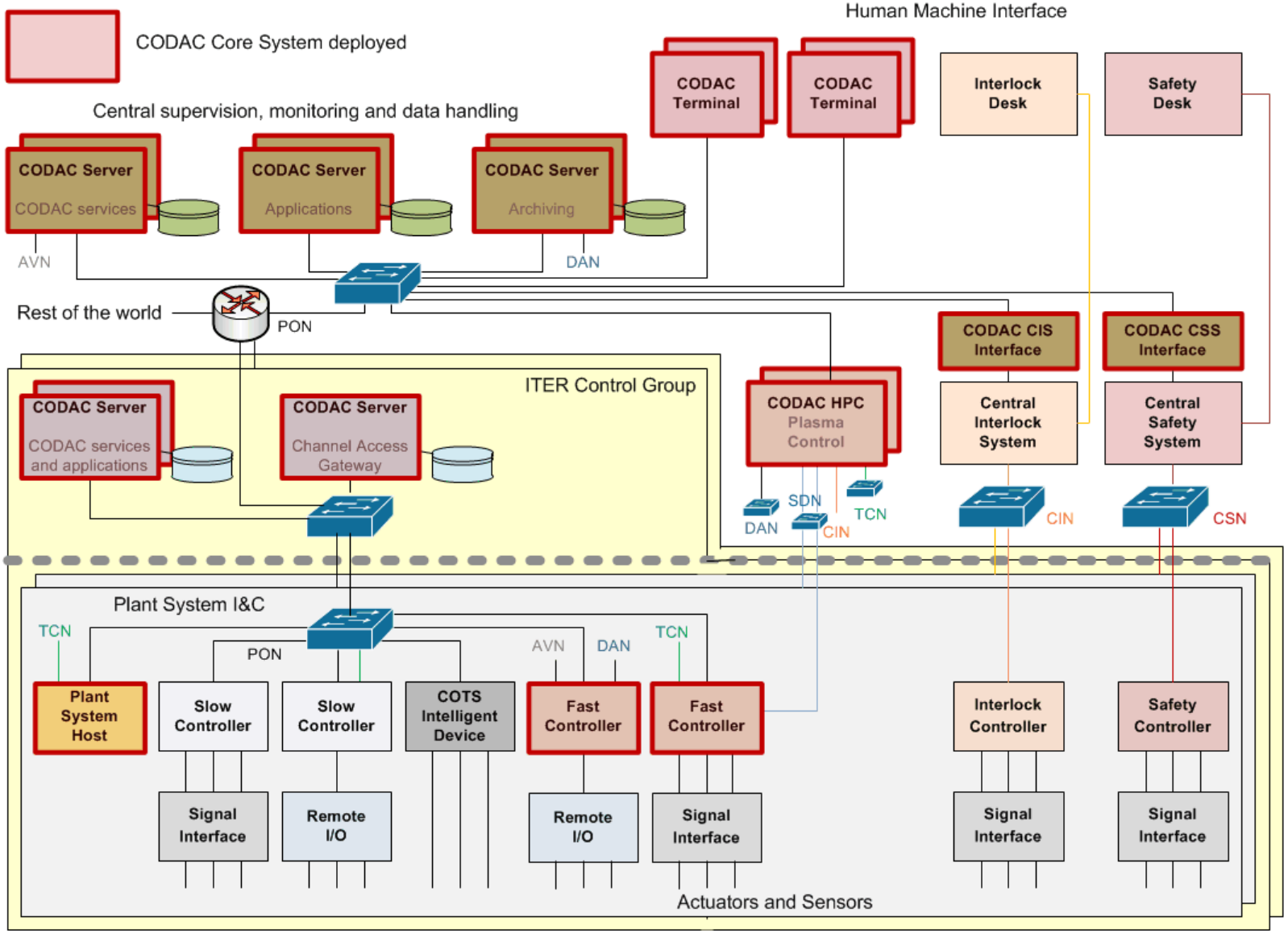

CODAC Core System

- The ITER software distribution for
  - Development and test systems used by ITER suppliers
  - On-site systems (IO's and procured)
- Based on RHEL (6.x) + EPICS (3.14.x)
  - RHEL regular by default – Now RHEL 6.3
  - MRG-R for some fast controllers – Now MRG-R 3.0
- With ITER specific tools and components
- Built and distributed by the ITER Organization
  - Incremental releases (1 new major version every year in February since 2010)
  - User support
  - Training (monthly at Cadarache + on request at Domestic Agencies)

CODAC Core System registered user organizations (Apr '12)

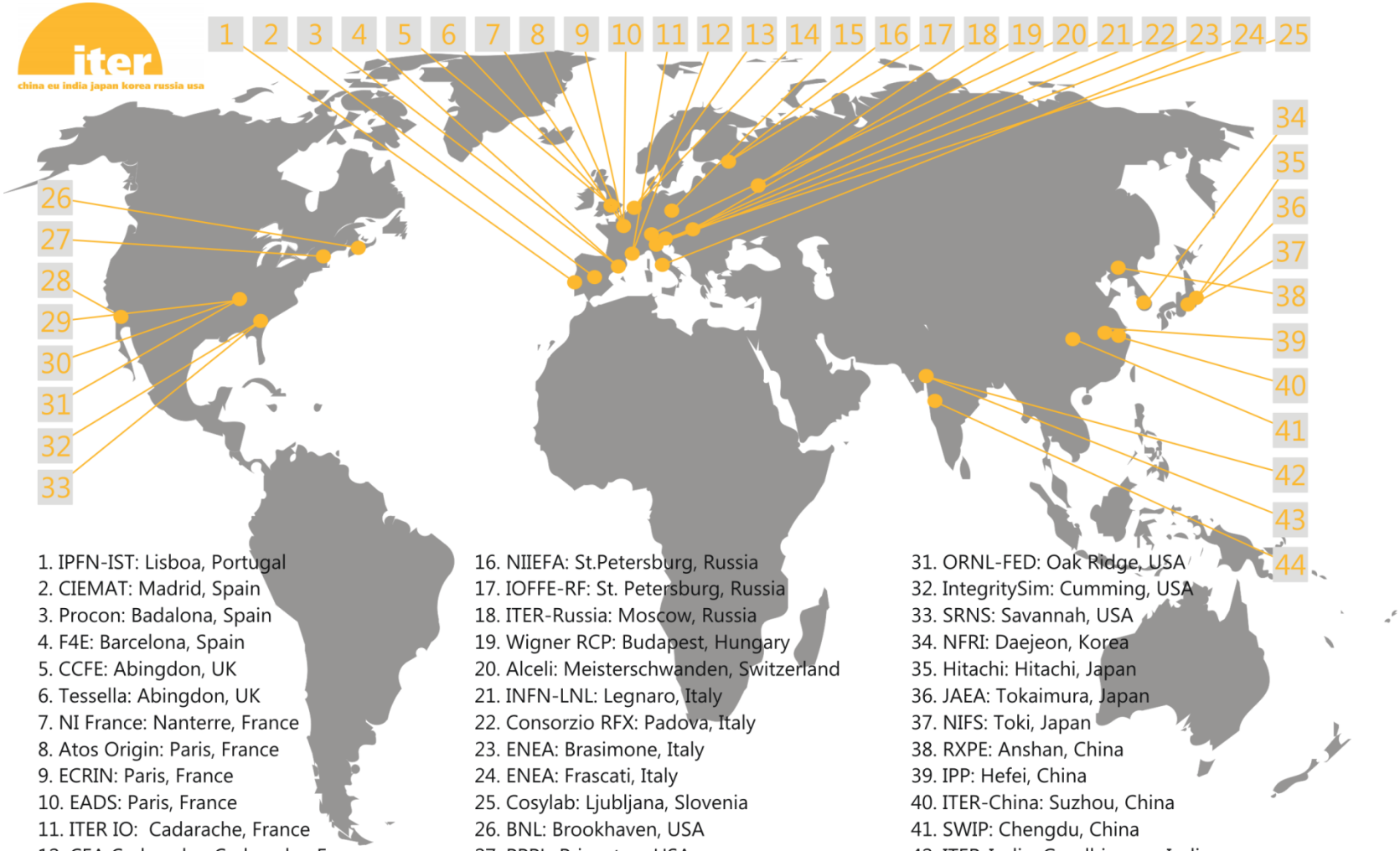

1. IPFN-IST: Lisboa, Portugal
2. CIEMAT: Madrid, Spain
3. Procon: Badalona, Spain
4. F4E: Barcelona, Spain
5. CCFE: Abingdon, UK
6. Tessella: Abingdon, UK
7. NI France: Nanterre, France
8. Atos Origin: Paris, France
9. ECRIN: Paris, France
10. EADS: Paris, France
11. ITER IO: Cadarache, France
12. CEA Cadarache: Cadarache, France
13. Intermodalics, Leuven, Belgium
14. ITER-NL: Eindhoven, Netherlands
15. DMCS-TUL: Lodz, Poland
16. NIIEFA: St.Petersburg, Russia
17. IOFFE-RF: St. Petersburg, Russia
18. ITER-Russia: Moscow, Russia
19. Wigner RCP: Budapest, Hungary
20. Alceli: Meisterschwanden, Switzerland
21. INFN-LNL: Legnaro, Italy
22. Consorzio RFX: Padova, Italy
23. ENEA: Brasimone, Italy
24. ENEA: Frascati, Italy
25. Cosylab: Ljubljana, Slovenia
26. BNL: Brookhaven, USA
27. PPPL: Princeton, USA
28. General Atomics: San Diego, USA
29. ITER-U.S.A.: Oak Ridge, USA
30. ORNL: Oak Ridge, USA
31. ORNL-FED: Oak Ridge, USA
32. IntegritySim: Cumming, USA
33. SRNS: Savannah, USA
34. NFRI: Daejeon, Korea
35. Hitachi: Hitachi, Japan
36. JAEA: Tokaimura, Japan
37. NIFS: Toki, Japan
38. RXPE: Anshan, China
39. IPP: Hefei, China
40. ITER-China: Suzhou, China
41. SWIP: Chengdu, China
42. ITER-India: Gandhinagar, India
43. IPR: Gandhinagar, India
44. TCS: Pune, India

Shared/Shareable Tools & Components

- Control System Studio (BOY, BEAST, BEAUTY)
  - Contribution to BOY: icon library
  - Contribution to BEAST: alarm notifier
  - PostgreSQL
- S7 driver for Siemens PLC (from SLS but modified…)
- Linux drivers & EPICS device support for some N.I PXI boards.
- Enhancements for EPICS on Multicore MRG-R
  - Manage threads configuration: priority, scheduling policy and affinity (some changes already in 3.15)
  - Improve parallelism (?)

ITER Specific Tools & Components

- Configuration tools – **SDD** (wait for Lana's talk).
  - The database is the Truth
- Integrated workflow
  - from database & SVN to RPMs
  - uniform commands (*checkout*, *compile*, *test*, *package*)
  - Implemented with Maven (mvn)
  - Continuous integration (Jenkins)
  - Distribution servers (RH satellite)

ITER Specific Tools & Components (cont)

- Synchronous Databus Network: data exchange for plasma feedback control.
  - based on UDP multi-cast
  - 1 KHz feedback
  - **25 µs-50µs** transmission delay
- Time Communication Network: ITER time distribution
  - IEEE-1588
  - 50 ns time accuracy
  - Source for timing boards (COTS)

+ few other that you probably don't care

Development workflow

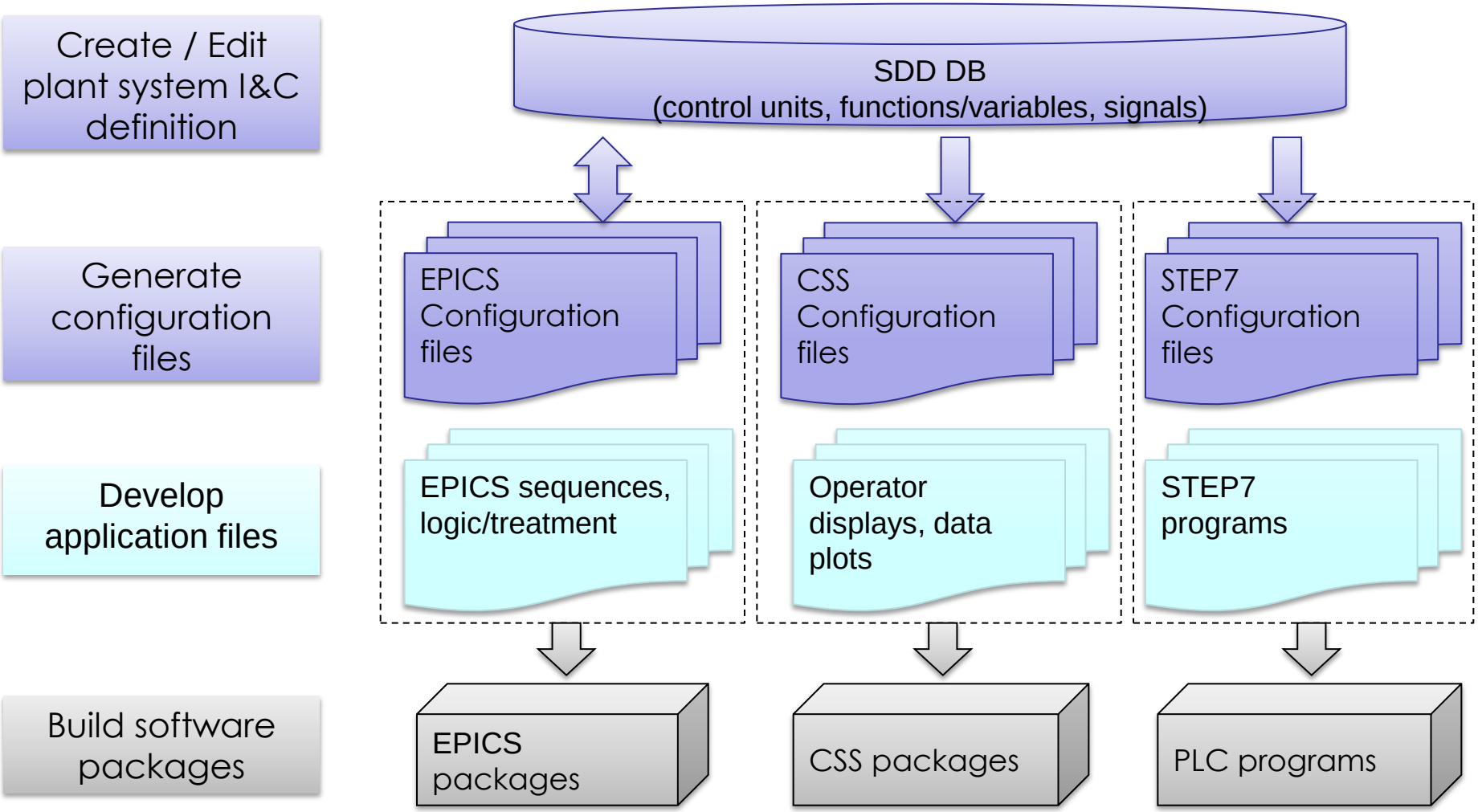

Software Deployment / Testing

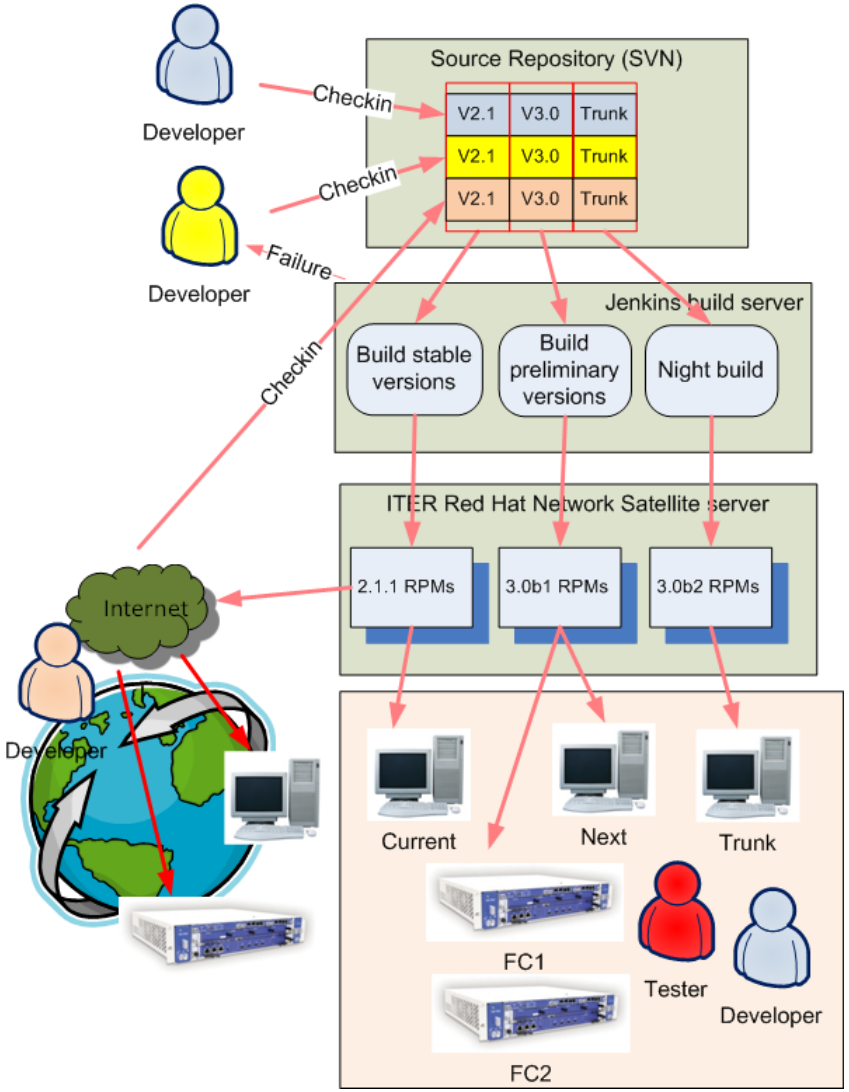

Regular Linux, real-time platforms, …

Delivery

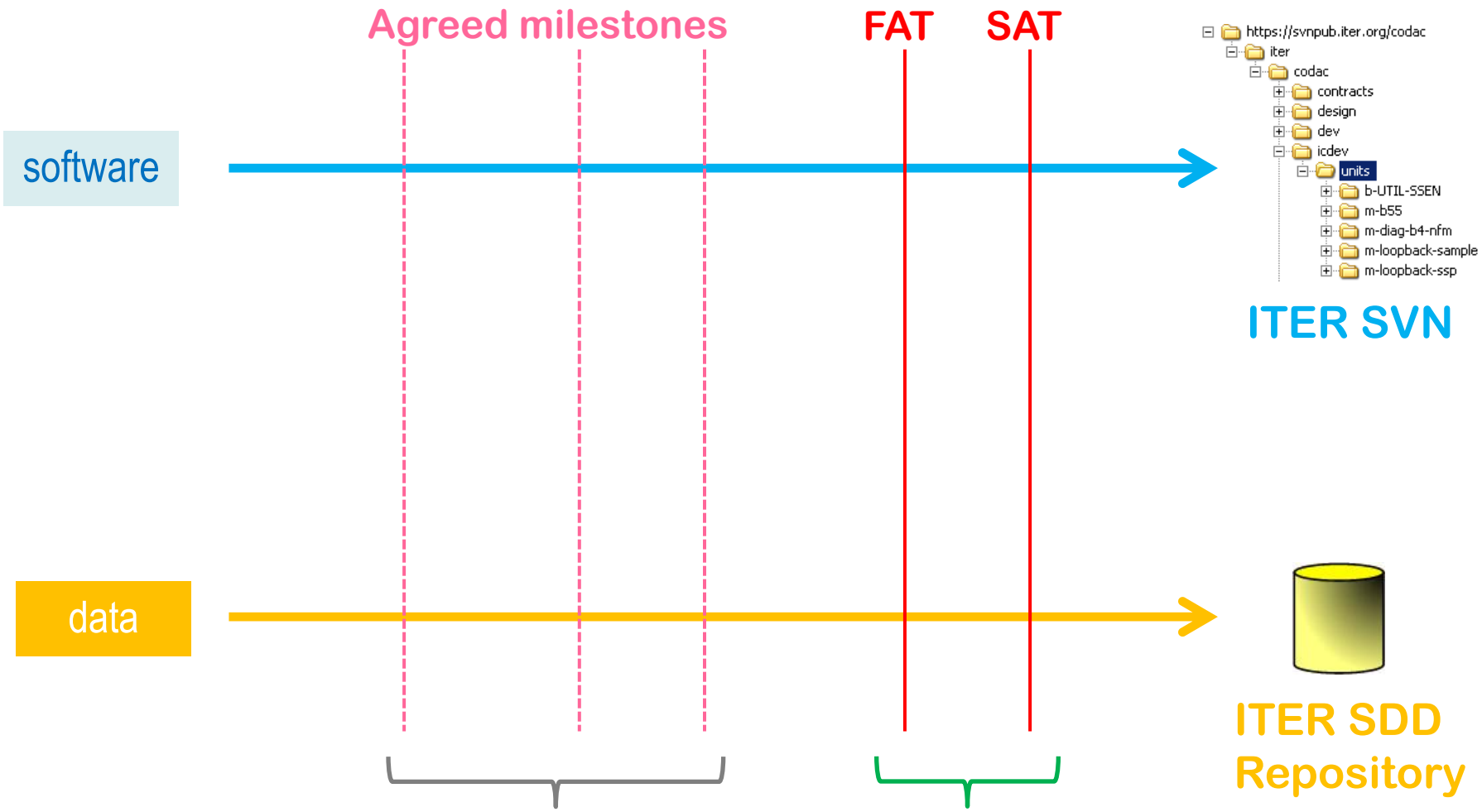

- ☑ software in development
- ☑ full validation is optional

- ☑ software stable & tested
- ☑ data passes full validation

source: 27LH2V v6.1

S7 driver
ITER extensions

- Single configuration data for EPICS PVs and S7 Data-Blocks (SDD!) to avoid consistency issue.
- Extended frame with header, version, heart-bit … for error detection
- Support for redundant PLC (new)
- Same protocol as SLS version.
  - ✓ 8 KBytes @ 10 Hz, OK

What constitutes a FAST CONTROLLER?

Industrial computer

I/O chassis (a PXIe rack)

TCN timing card NI PXI-6682

A/D I/O card NI PXI-6259

I/O card - signal concentrator connector

Signal concentrator

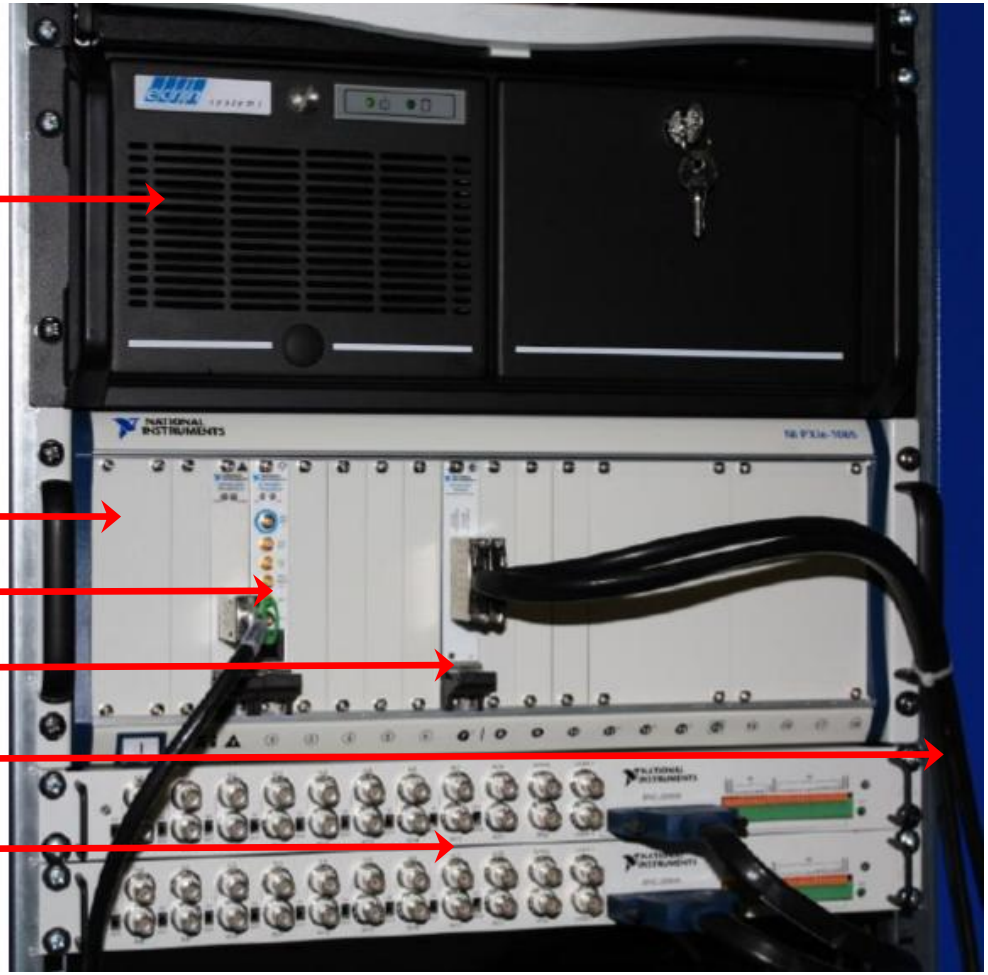

What constitutes a FAST CONTROLLER?

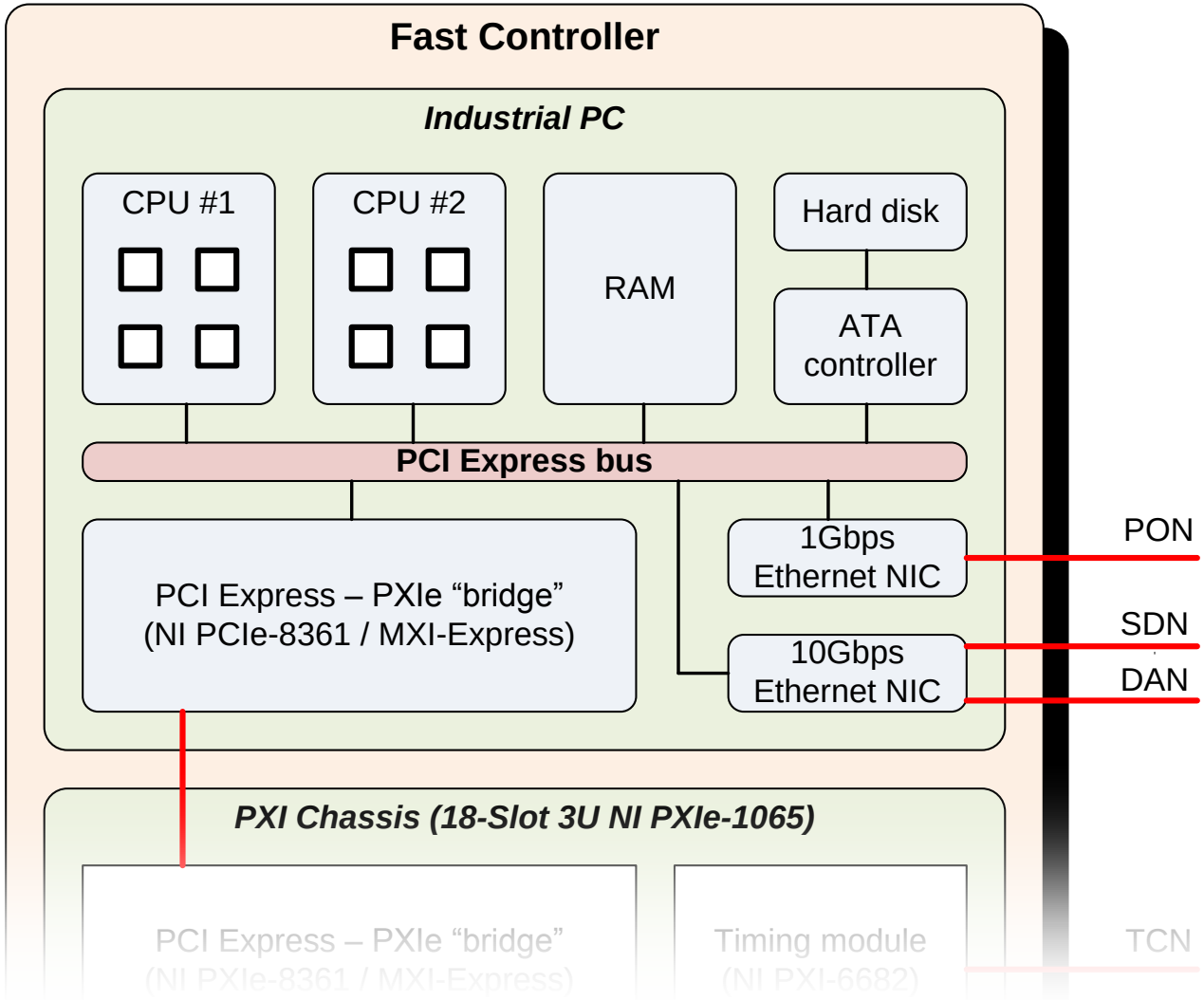

What constitutes a FAST CONTROLLER?

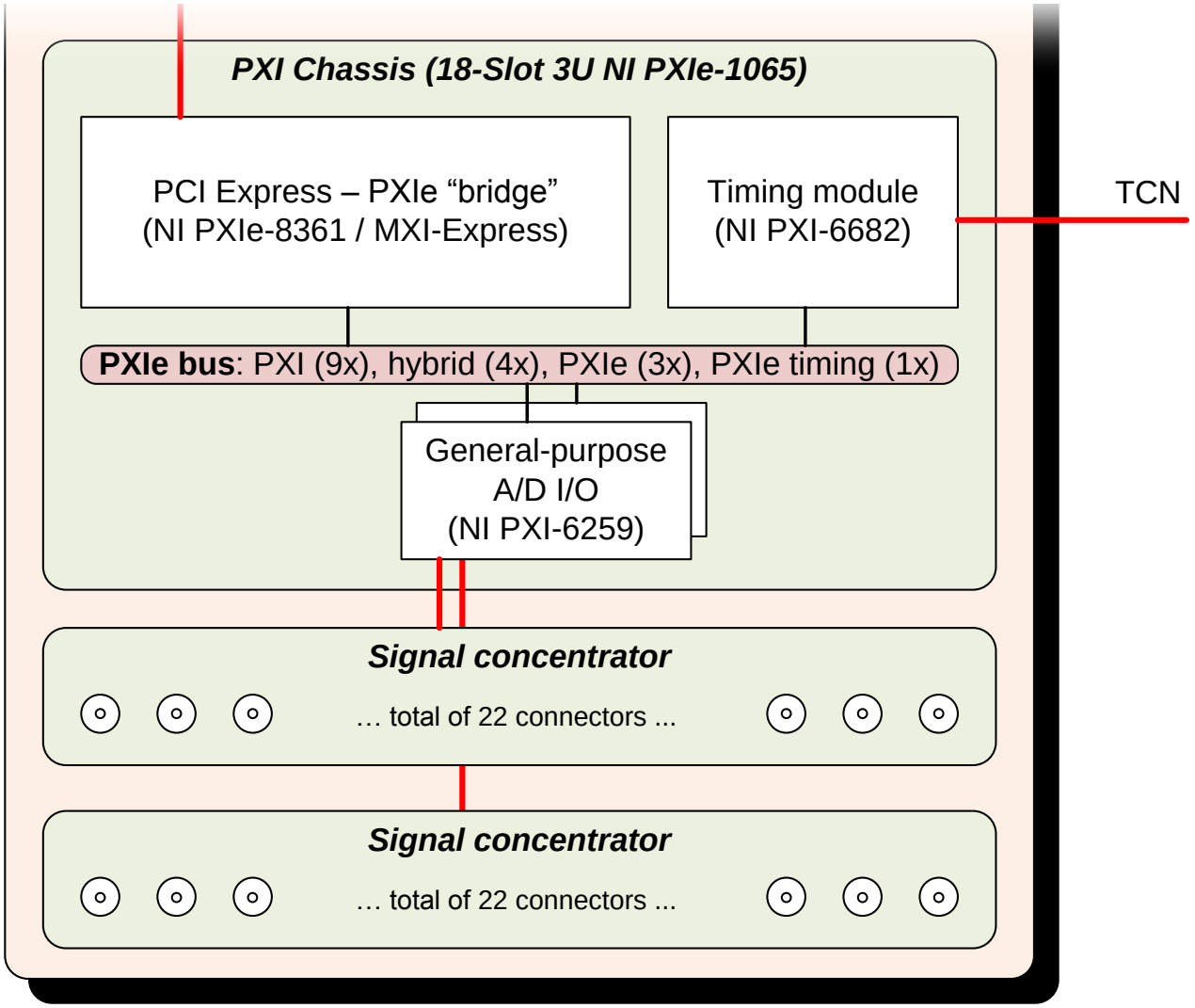

NI PXI-6682
Timing and synchronization board

- NI-PXI 6682
  - Synchronization (50 ns rms)
  - Clock generation
  - Synchronous trigger generation
  - Signal timestamping
  - Routing signals (sample triggering)

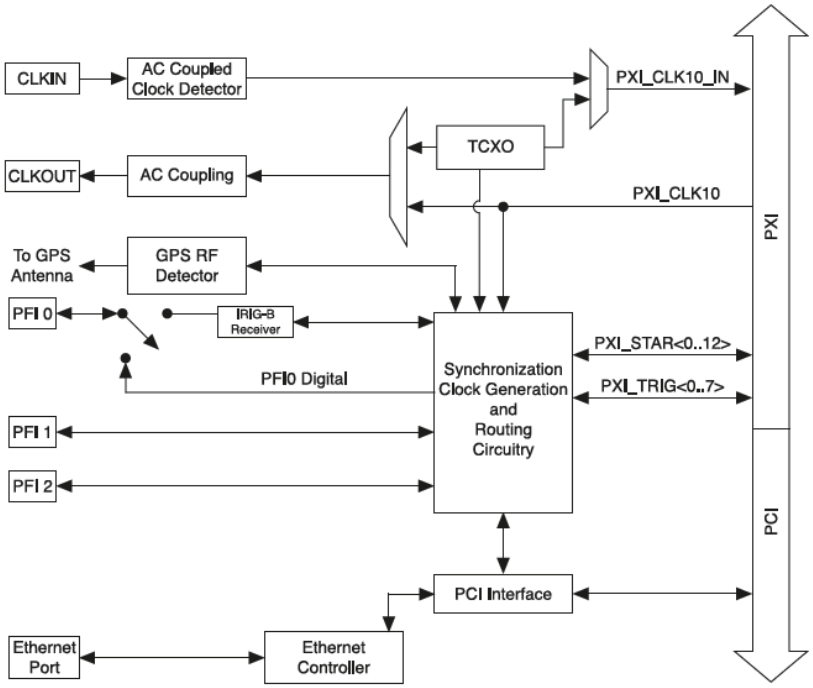

NI PXI-6259
Multi-function DAQ board

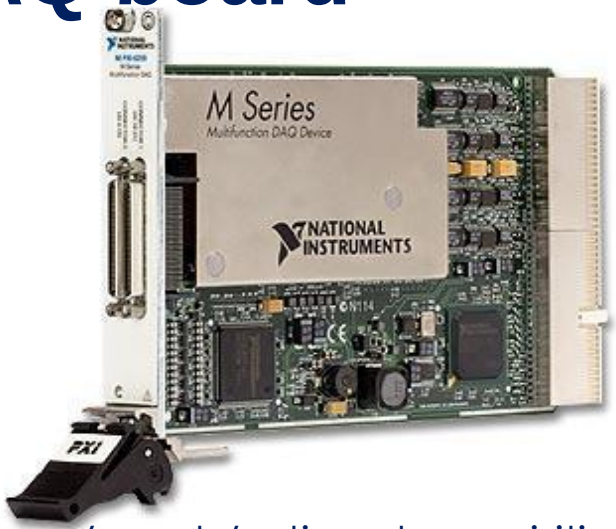

AI Channels

Channels : 32 Single-Ended Channels
or 16 Differential Channels

Sample rate : 1.25 Ms/s single channels
1 Ms/s multi channels (all)

Resolution: 16 bits

AO Channels

Channels : 4

Update rate : 2.8 Ms/s per each channel

Resolution: 16 bits

Digital I/O

Bidirectional Channels : 48

Counters

Channels: 4

Resolution: 32 bits

- Perform s/w or h/w timed acquisition
- Finite(pre trig + post trig) or continuous sampling mode
- Supports DMA as the data transfer mechanism
- Each DIO can be configured individually as a DI or DO signal
- Capable of digital waveform acquisition and generation

NI PXI-6528
Digital I/O

For applications which require high-voltage isolation and switching.

Channels:

- ❑ 24 optically isolated input channels
- ❑ 24 solid-state relay output channels

Features:

- digital filtering,
- input change detection,
- programmable power-up output states,
- watchdog timer
- Real-Time System Integration (RTSI).

Next?

- New NI PXI timing boards
- NI X-serie board: PXIe-6368
  - Linux driver, beta version (limited distribution)
- NI FlexRIO boards & cRIO
  - Prototypes (no distribution yet)

  Note: cRIO is considered for fast interlocks.
- ATCA and µTCA platforms for diagnostics / DAQ
  - Prototype

ITER Control Keywords

- EPICS
- Control System Studio
- Linux, MRG-R
- Siemens PLC
- N.I. boards
- Ethernet protocols for timing and feedback networks

The configuration data must be in the data-base.
Including EPICS record definition.

- Build process
- Distributed control … team
  - Packaging
  - Distribution
  - Support
  - Training
  - QA (tests!)