Overview of PAL XFEL Project

October 22, 2012

EPICS Collaboration Meeting

In Soo Ko

on behalf of PAL XFEL Team

Contents

- PAL XFEL
  - General Description
  - Budget and Manpower
- Site and Buildings
- Design of Linac, BTL, and Undulator
- R&Ds for Domestic Production
  - Injector Test Facility
  - Modulators and CCPS
  - LLRF and RF Components
  - ID and ID Vacuum Chamber
  - X-band Cavity BPM with SLAC
- Summary

PAL XFEL Project

0.1-nm Hard X-ray 10-GeV XFEL

- **Project Period: 2011 ~ 2014**
- **Commissioning: 2015**
- **Total Budget: 400 M$**

Building		
Linac Hall		780
	1. Assembly	10
	2. Linac	710
	3. BTL	60
Undulator Hall		250
XFEL Beamline		80
	1. Front-end	20
	2. Experiment hall	60
Total Length [m]		1110

Current Budget Plan

	2011	2012	2013+	2014	Total
Electron Beam	120	30	425	1,882	2,457
Injector	38	25	5	2	70
Linac	43	5	356	1,497	1,901
IDs	39	0	64	383	486
Photon Beam	15	30	78	310	423
Front End	3	5	11	14	33
BLs	5	15	37	123	180
Experiments	7	0	30	173	210
Building	65	400	347	308	1,120
Total	**200**	**450**	**850**	**2,500**	**4,000**
Local Government*	-	-	130	130	260

+ Subject to approval by National Assembly
* For users dormitory and exhibition hall

Unit in 100 MWon = 100 kUSD

Organization

PAL-XFEL Project

Director : I.S.Ko
Deputy Director : T.H.Kang

- **Accelerator Division (65)**
  - **Linac Team (32)**
    - Beam Dynamics (5)
    - Diagnosis Control (12)
    - Injector (3)
    - Laser (3)
    - RF (9)
  - **Undulator Team (14)**
    - Undulator Magnet (7)
    - F/M & MPS (3)
    - Vacuum (4)
  - **Conventional Facility Team (19)**
    - Building (14)
    - Utility (5)
- **Experiment Support Division (56)**
  - **Beamline Development Team (14)**
  - **VUV Team (12)**
  - **X-ray 1 Team (14)**
  - **X-ray 2 Team (16)**
- **Project Management Team (9)**
- **Q/A Team (7)**

- Overall Beamline Design
- Vacuum & Girder support
- Photon Beam Handling System
- X-ray Optical System
- X-ray Diagnostic System
- Optical Laser System
- Interlock System
- Electric & Utility & Motion Control System
- Experiment Control & DAQ
- Experiment Instrumentation System H-XPP
- Experiment Instrumentation System H-CXI
- Experiment Instrumentation System S-XPP

Total: 137
(3 PhD + 4 Eng joined in 2012)
~30 more will join by 2014

Site Plan and Buildings

포항가속기연구소 항공사진('12.7)

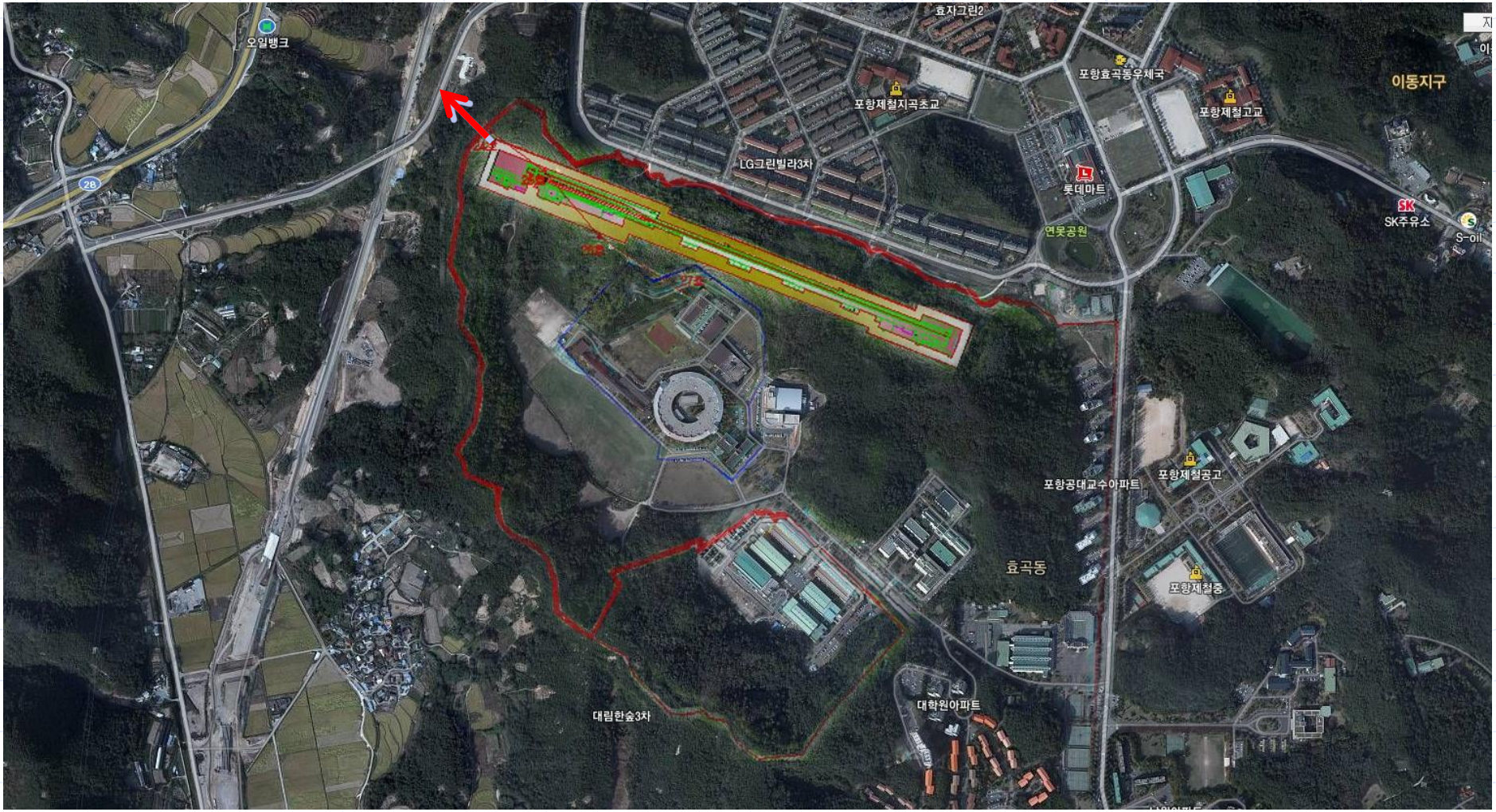
효자그린2
오일뱅크
포항효곡동우체국
이동지구
포항제철지곡초교
포항제철고교
LG그린빌라3차
롯데마트
SK
SK주유소
S-oil
연못공원
포항공대교수아파트
포항제철공고
효곡동
포항제철중
대학원아파트
대림한숲3차

Site (Vertical Cut)

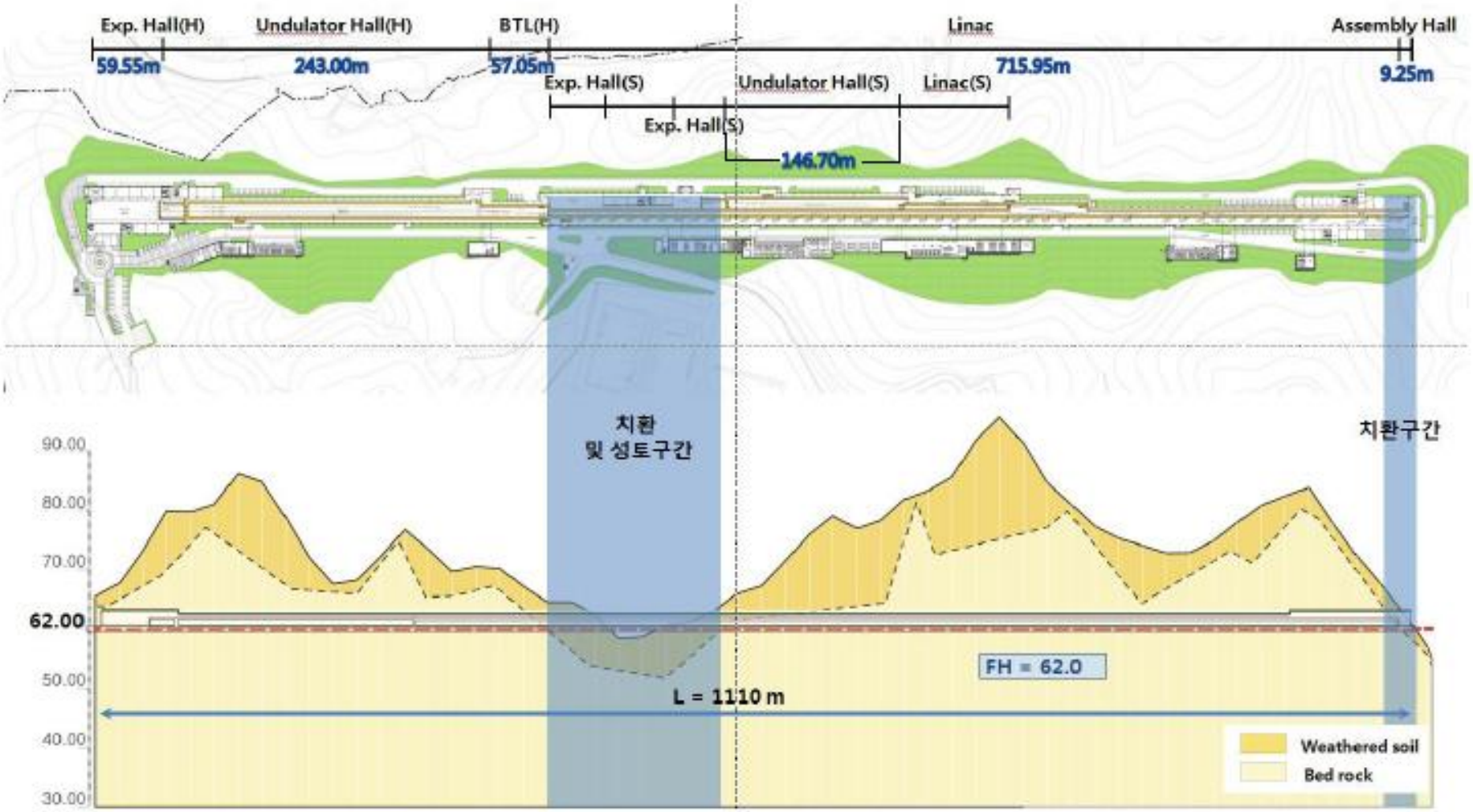

Site Plan (3D)

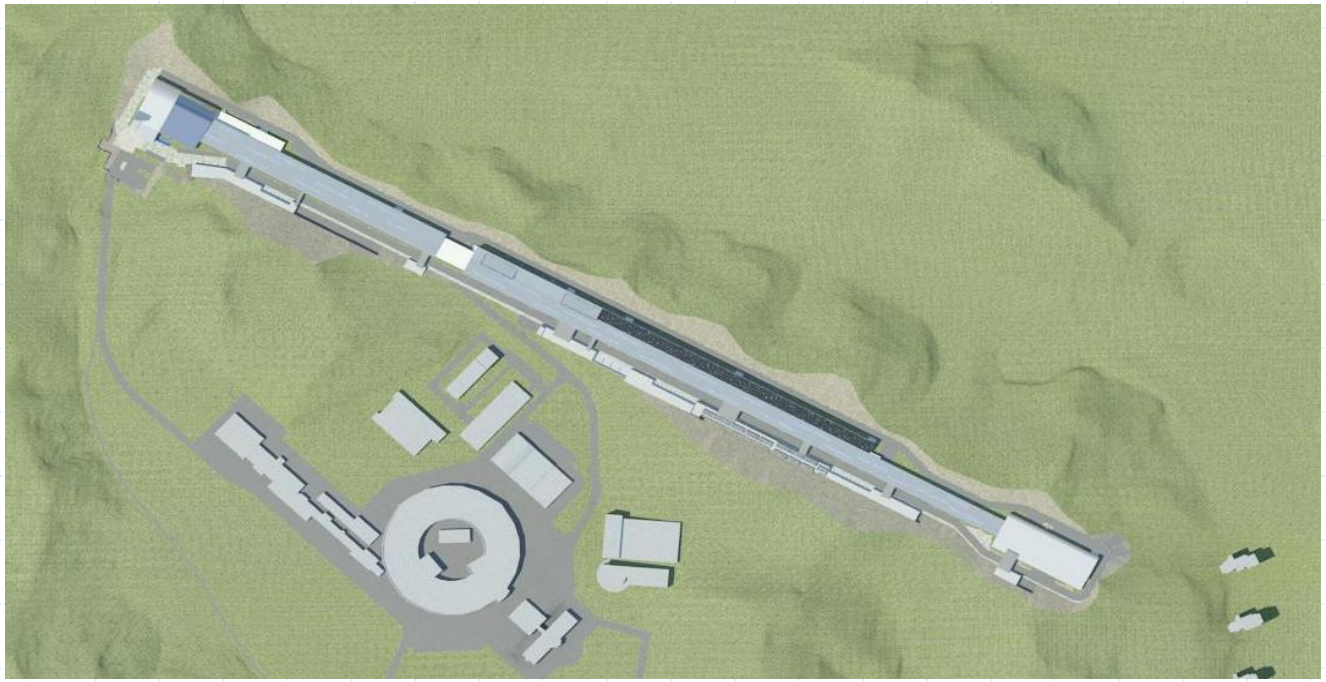

	FH : 60	FH : 62*
Volume of Cutting	1,791,895 m^3	1,128,200 m^3
Volume of Filling	52,057 m^3	99,522 m^3

* Reduced building width by 5 m in average

Building and Site Preparation

- Design company (Haenglim) finished the building design by August
  - Floor of the building is reduced by 14% from original design to save the cost.
  - ~38,000 m^2
- Construction company was chosen and the contract was made in August 16.
  - Consortium of POSCO E&C, SAMSUNG, and Dongdae
- Preparatory work beforehand
  - Construction HQ buildings ready on October 12
  - Tree cutting will be finished by November
  - Temporary exit for the construction (to avoid traffic in residential area) will be ready by November

포항가속기연구소 항공사진(‘12.10.16)

#27 Tower on Oct. 14, 2012

View from experiment hall

Linac (upstream area)

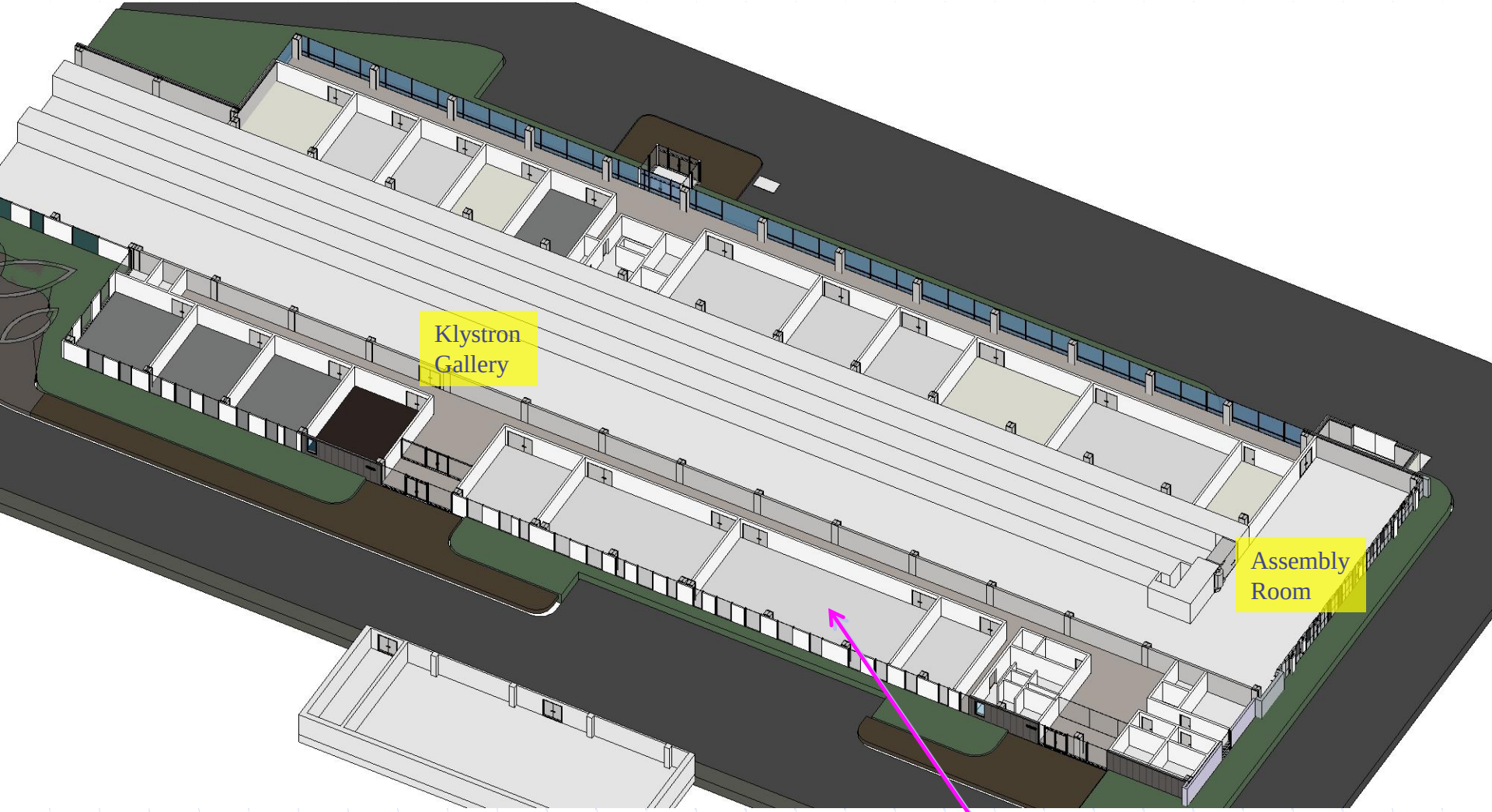

PAL-XFEL Control Room

Soft X-ray Hall

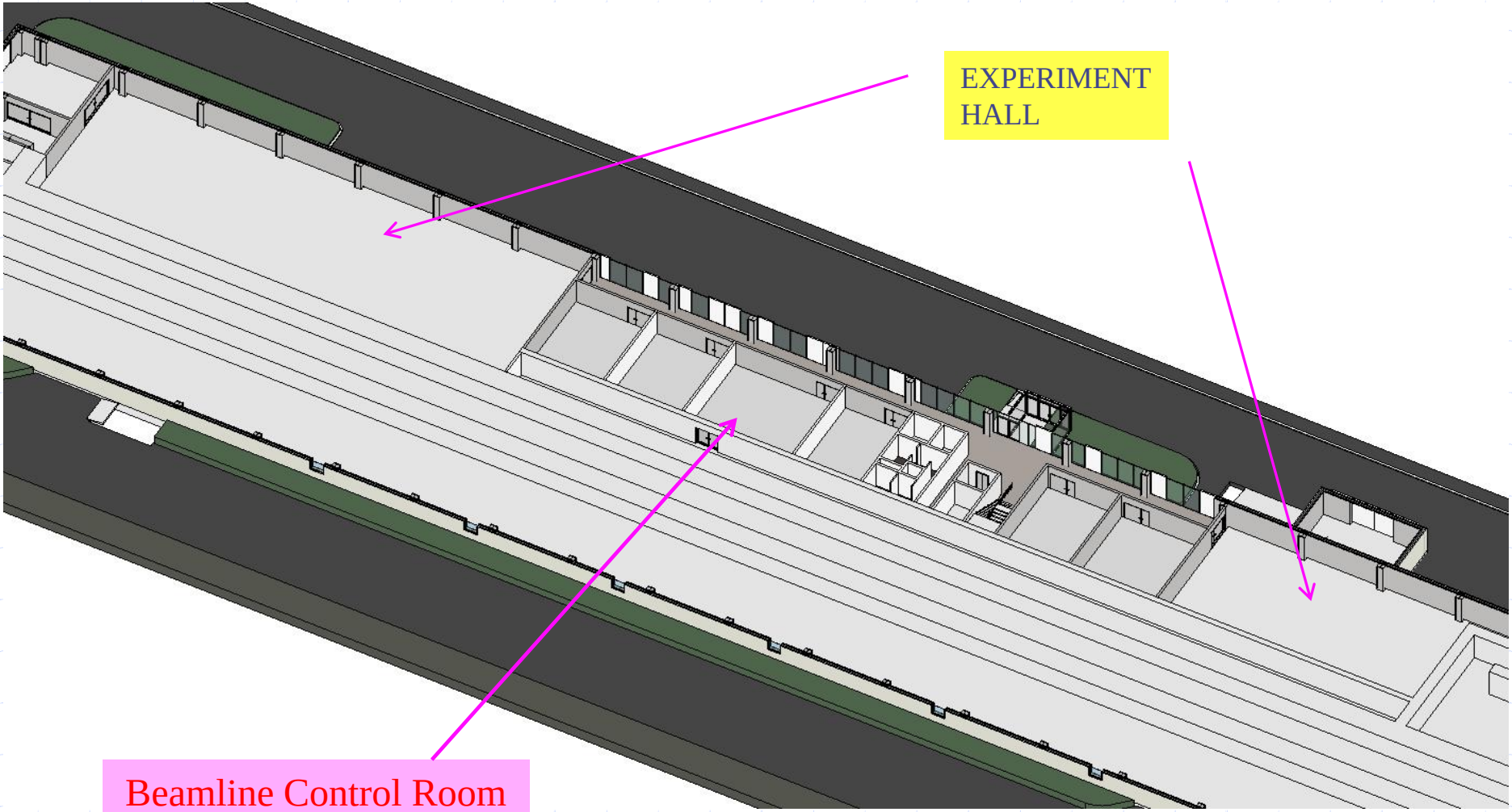

Hard X-ray Hall

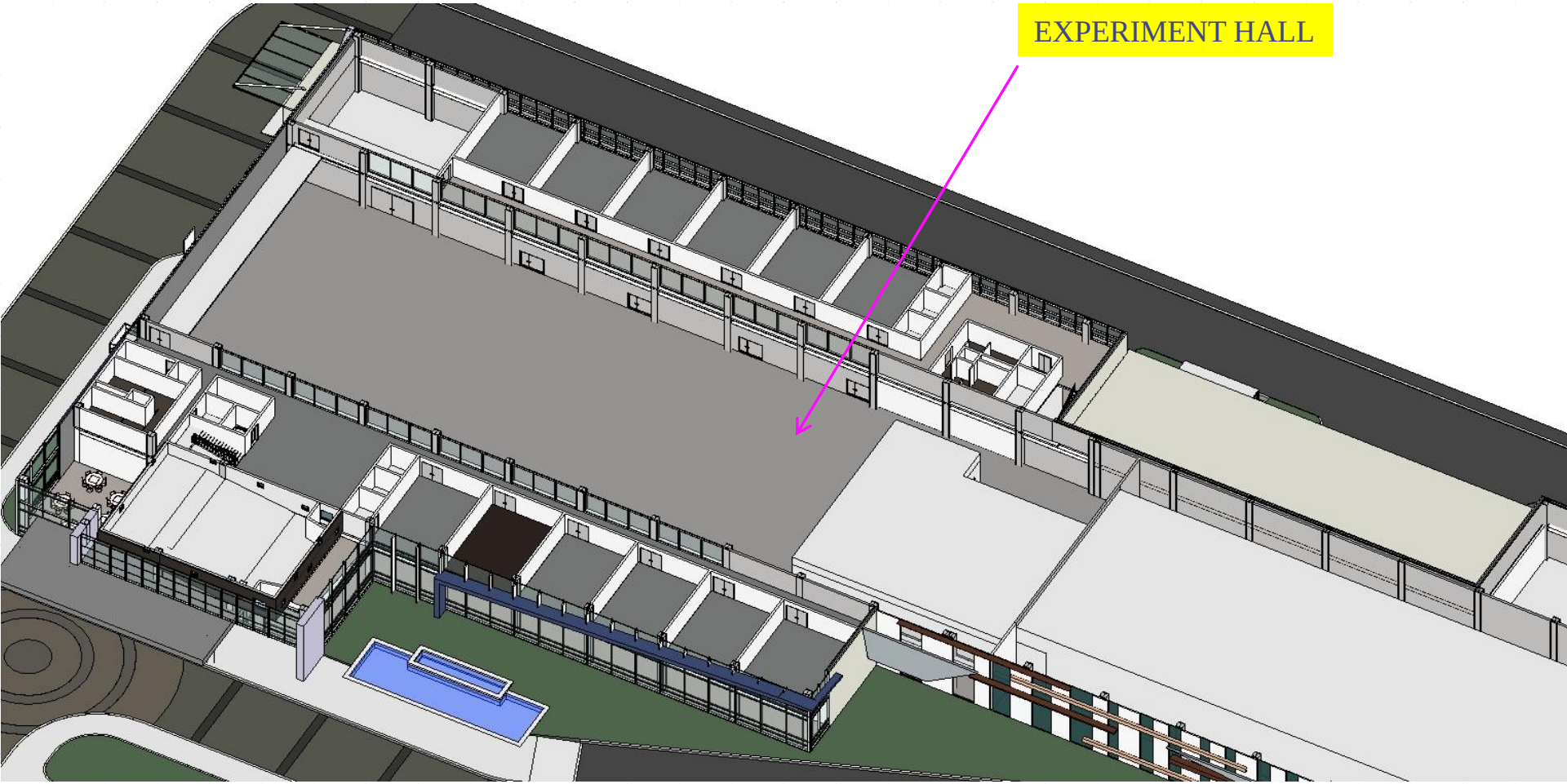

Each beamline has its own control room.
Accelerator control can be done at this room.

Air Handling (Klystron gallery)

(1) Klystron Gallery, Linac Tunnel

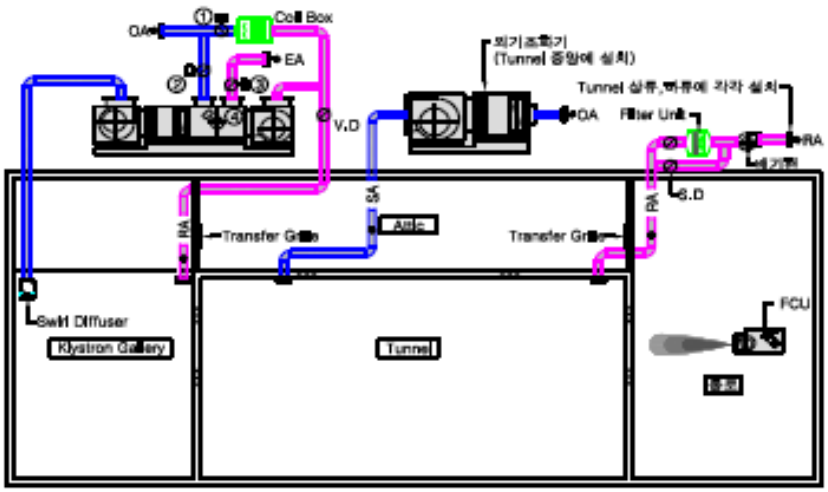

● Klystron Gallery 실내열환경 시뮬레이션

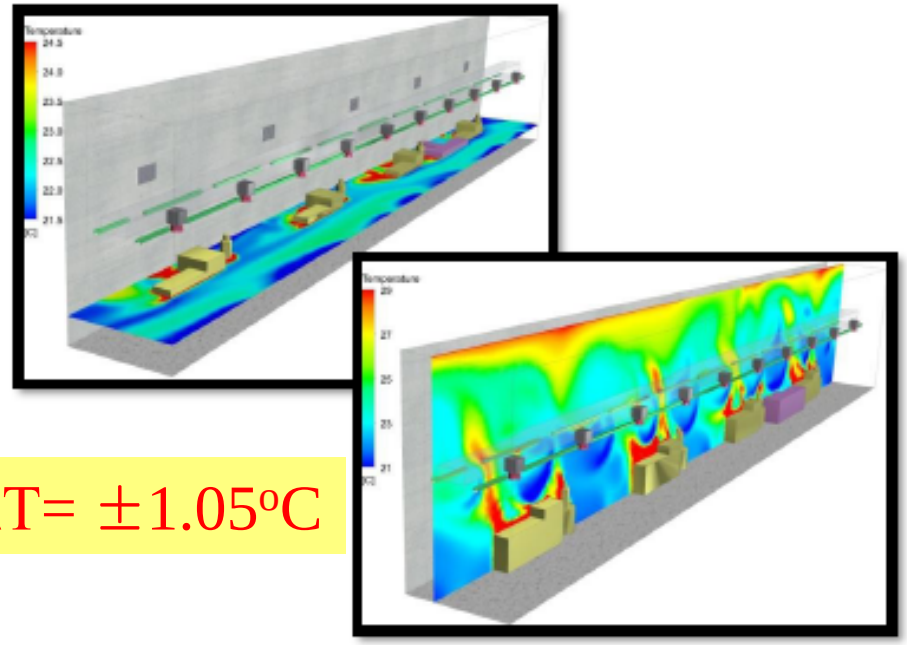

$\Delta T = \pm 1.05^{o}C$

● 방식 개요

- Gallery는 항온 (25±2℃) 공조가 필요 (정밀제어) (대상 높이 FH=4.0m)
- Gallery는 정풍량 단일 덕트방식으로 기류분포와 온도분포가 양호하도록 Swirl Diffuser 설치
- 통로에는 FCU를 설치
- 항온 유지를 위하여 과냉각후 온수coil에 의한 재열로 실내온도유지(냉방)
- Tunnel은 외기조화기 (OHU)와 배기 Fan에 의한 1종 환기
- 배기측에 HEPA Filter를 설치하여 오염원 포집후 배기
- 배기측에 배연을 고려하여 BY-Pass Damper 설치 (FAN은 평상시 배기와 배연 배기를 위한 인버터 제어)
- 터널 상부 천정(비공조공간)에 외기의 영향이 없도록 Gallery 또는 통로 경계벽에 Transfer Grille을 설치하여 환기

● 결과

- 각 측정점에서의 평균온도는 23.94℃이고, 측정점의 99%가 온도편차가 ±1.05℃ 내에 포함되며, 설치된 장비들 중 발열부의 상부에서는 온도편차가 ±4.9℃로 나타남.
- 각 측정점의 온도편차는 발열부 상부를 제외하고 대부분의 공간에서 약 1℃ 이내로 나타나 목표하는 항온범위를 달성하는 것으로 사료됨.

Air Handling (Undulator Hall)

(2) Undulator Tunnel 및 통로, Tunnel 상부

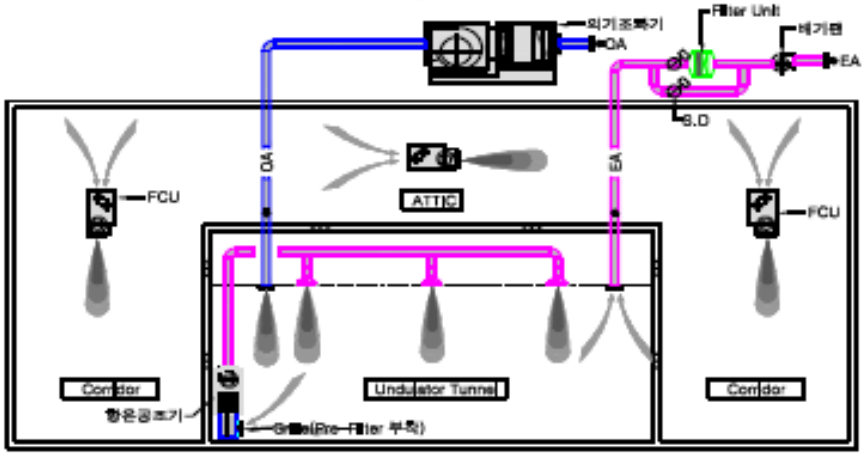

● 방식 개요

- 항온 공간으로 정밀온도 (25±0.1℃) 제어 공간 (정밀 제어)
- 대규모 공간 (11m X 242m)으로 구간별 온도편차는 발생하나 구역별 온도편차는 ±0.1℃ 유지 필요
- 외기의 영향이 없도록 복도와 상부천장 2중공간(attic) 설치하고 팬코일유닛을 설치(년중운전)
- 실내에 발열처리를 위한 다수의 덕트 접속형 항온 공조기를 설치하며 충분한 환기량을 확보하여 실내온도를 유지하고 제어는 공조기의 냉수 Coil에 의한 과냉각 후 <△t=0.5~1℃> Elec Coil로 재열하여 실내온도 제어 (scr 제어방식)
- 외기조화기(OHU)를 설치 급기, 배기하며 실내를 부압(Negative Pressure)유지→운전중에는 부압 유지를 위해서 Fan에 인버터 설치
- 오염공기를 단독 배기하며 배기측에 HEPA Filter를 설치하여 오염원 포집
- 배기 Fan은 배기운전시 실내압력유지(부압)와 배연을 위한 인버터제어
- Tunnel의 진동기준 : ISO criterion VC-D curve(Max level 250 micro-in / sec, 48dB, 0.3microns) 이내
- 항온공조기의 Pre-Filter는 환기 Grille에 부착

● Undulator Tunnel 실내열환경 시뮬레이션

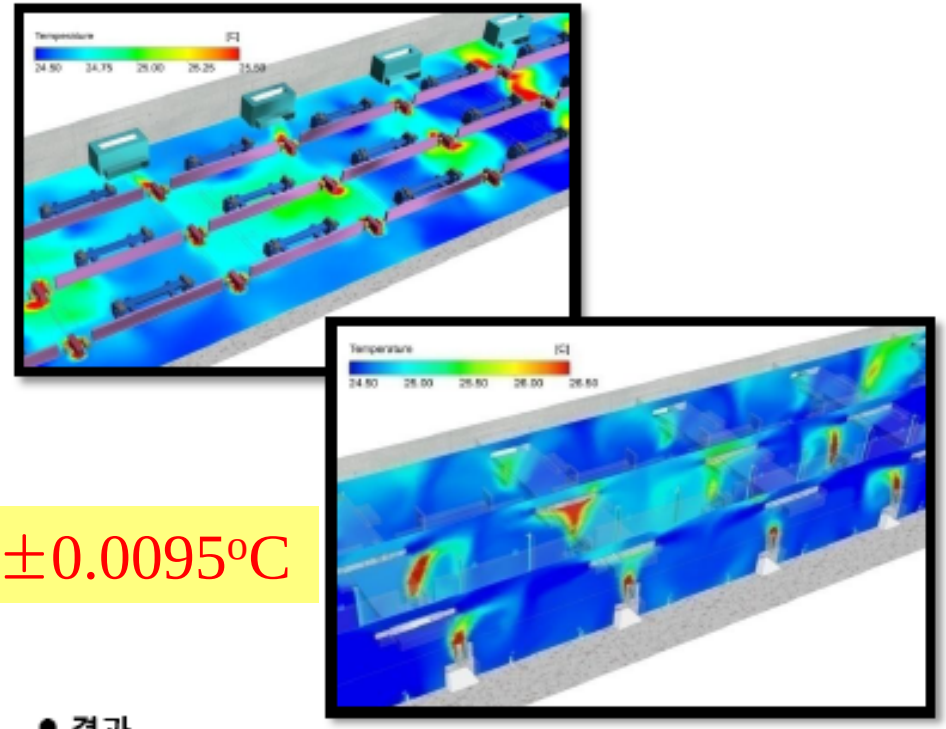

$\Delta T = \pm 0.0095^{o}C$

● 결과

- Undulator Tunnel에서 시간에 따른 온도편차를 분석하기 위해 Undulator와 Magnet 주위 측정점을 설정하였음.
  전체 측정점에서의 평균온도 25.6℃로 나타나며, 전체온도편차는 99%정도가 ±0.0933로 나타남.
- ±0.1℃가 요구되는 Undulator 주위(상부, 측부)는 ±0.0095℃로 나타나 목표로하는 항온범위를 달성하는 것으로 사료됨.

Design of
Linac, BTL, and Undulators

Linac System

- Injector to 139 MeV + **Laser heater**
- **S-band cavities** for beam acceleration
- **X-band cavity** for linearization in time-energy phase space
- **BC1** (1st magnetic bunch compressor) at 330 MeV
- **BC2** at 2.52 GeV
- Beam branch to soft X-ray beamlines at 3 GeV
- **BC3** at 3.93 GeV
- Linac end at 10 GeV

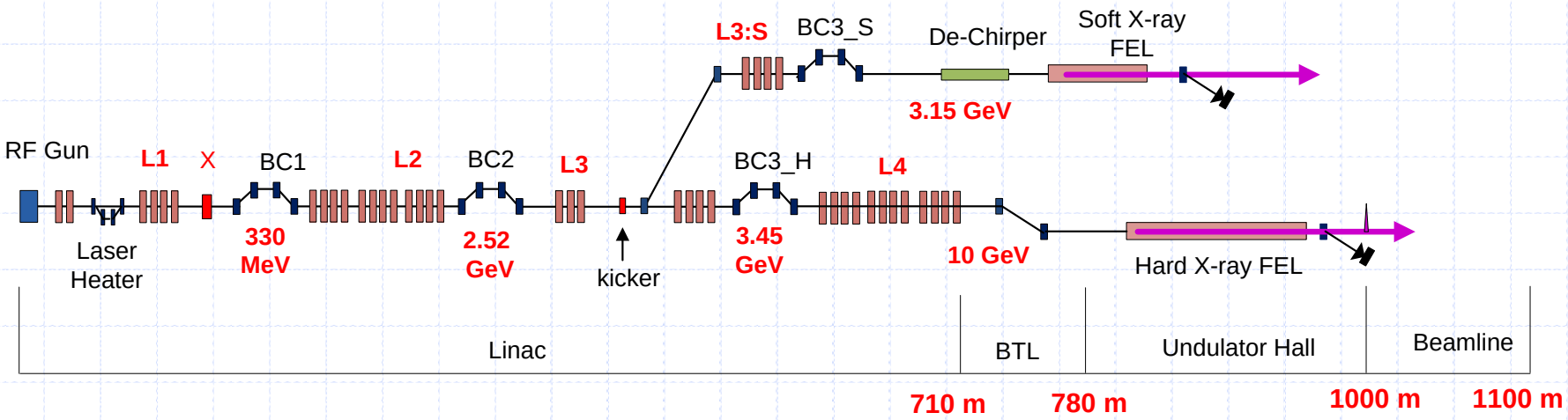

XFEL Layout

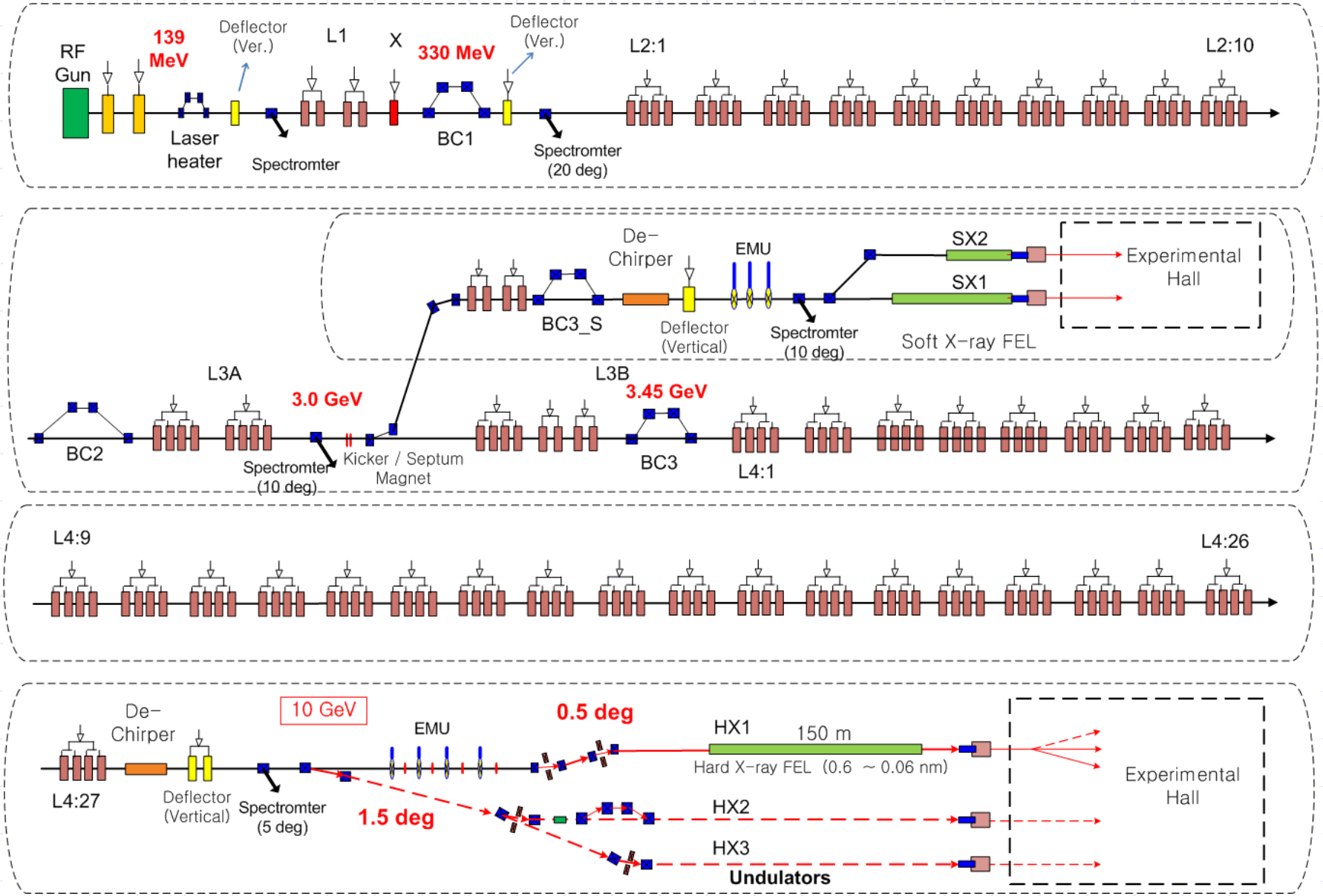
RF Gun
139 MeV
Deflector (Ver.)
L1
X
330 MeV
Deflector (Ver.)
L2:1
L2:10
Laser heater
Spectromter
BC1
Spectromter (20 deg)
De-Chirper
EMU
SX2
SX1
Experimental Hall
BC3_S
Deflector (Vertical)
Spectromter (10 deg)
Soft X-ray FEL
L3A
3.0 GeV
L3B
3.45 GeV
BC2
Spectromter (10 deg)
Kicker / Septum Magnet
BC3
L4:1
L4:9
L4:26
De-Chirper
10 GeV
EMU
0.5 deg
HX1
150 m
Hard X-ray FEL (0.6 ~ 0.06 nm)
L4:27
Deflector (Vertical)
Spectromter (5 deg)
1.5 deg
HX2
HX3
Undulators
Experimental Hall

Undulators

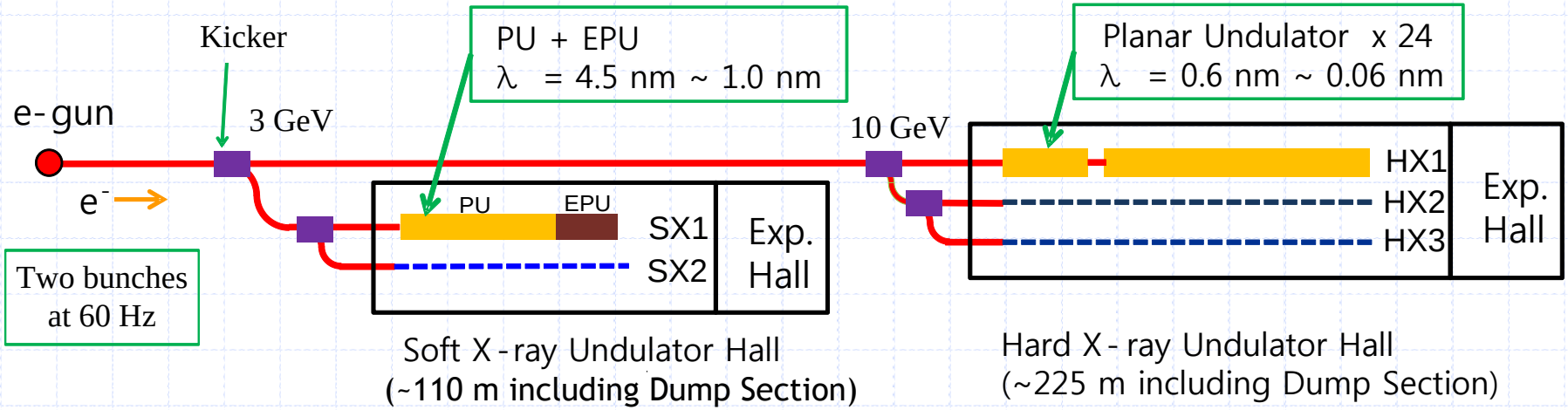

XFEL	HX1	SX1
Beam Energy [GeV]	10	3.15
Wavelength [nm]	0.06 ~ 0.6	1 ~ 3(413 ~ 1240 eV)
Wavelength Tuning	0.6 ~ 0.1 (Beam Energy) 0.1 ~ 0.06 (Undulator Gap)	Undulator gap
Undulator Type	Planar	Planar (+ APPLE II)
Undulator Period [cm]	2.44	3.4
Undulator Gap [mm]	7.2	8.3

Undulator Structure

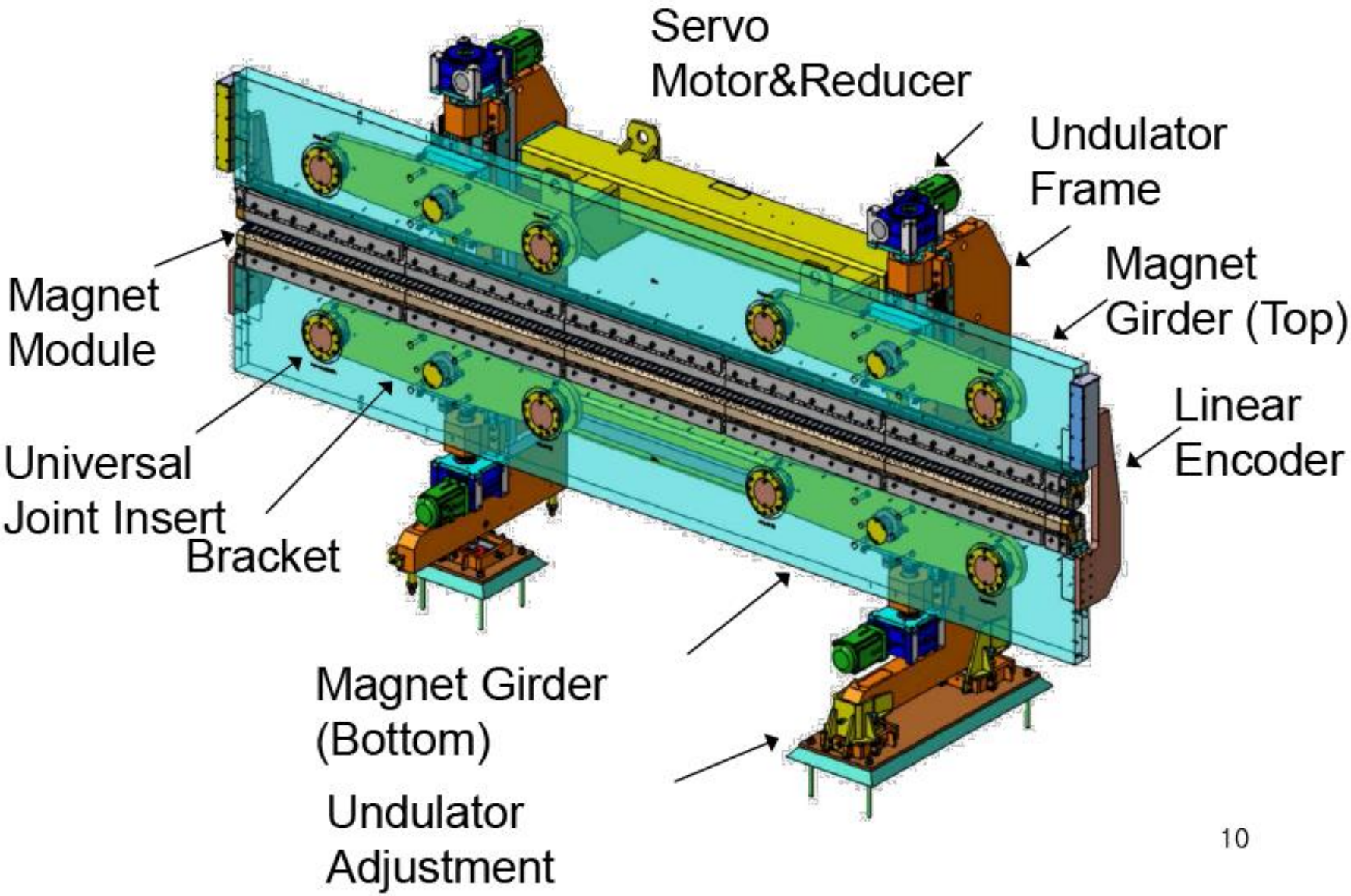

Undergoing R&Ds

Injector Test Facility

Modulator and CCPS

LLRF

RF Components

Undulator

Undulator Vacuum Chamber

X-band Cavity BPM (with SLAC)

Injector Test Facility

RF gun & solenoid

Acc tube w/ solenoid

Acc tube w/ solenoid

Laser heater

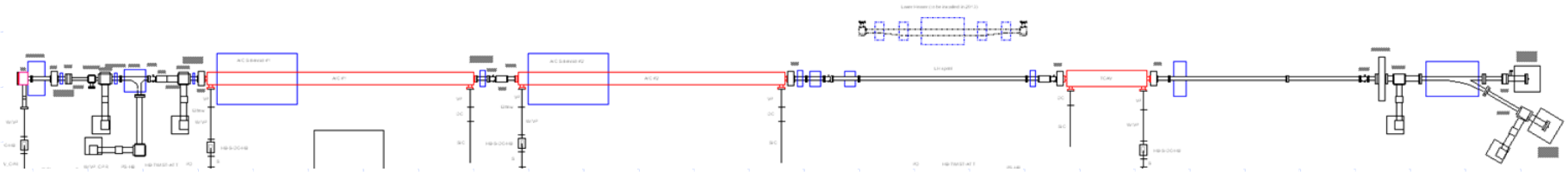

Spectrometer dipole

RF deflector

Spectrometer dipole

Other diagnostics: screens, ICTs, phase monitors, BPMs, wire scanner

Aiming at the full characterization of the PAL-XFEL injector (139 MeV) and R&Ds for gun, cathode, laser, timing, RF, control, and diagnostics!

ITF Location

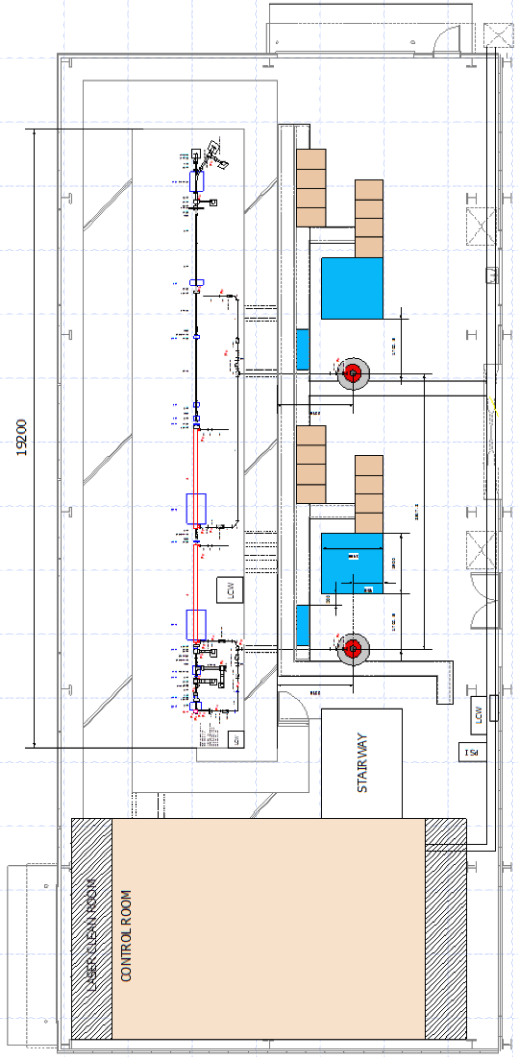

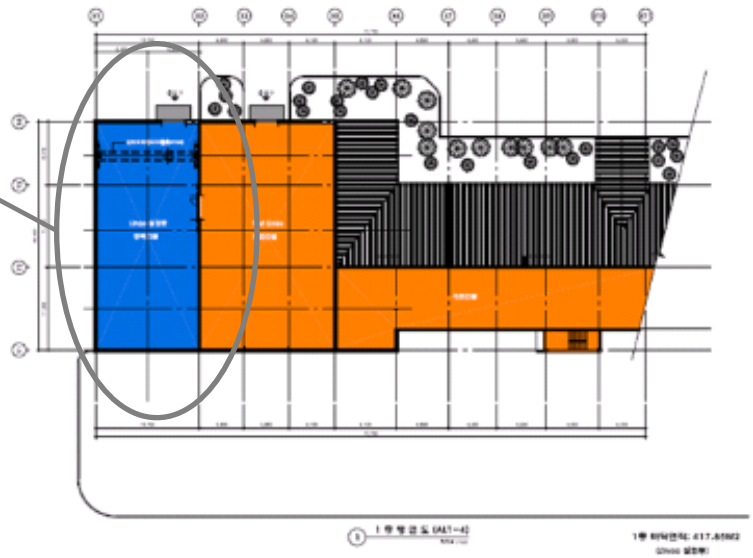

ITF as of Oct. 13, 2012

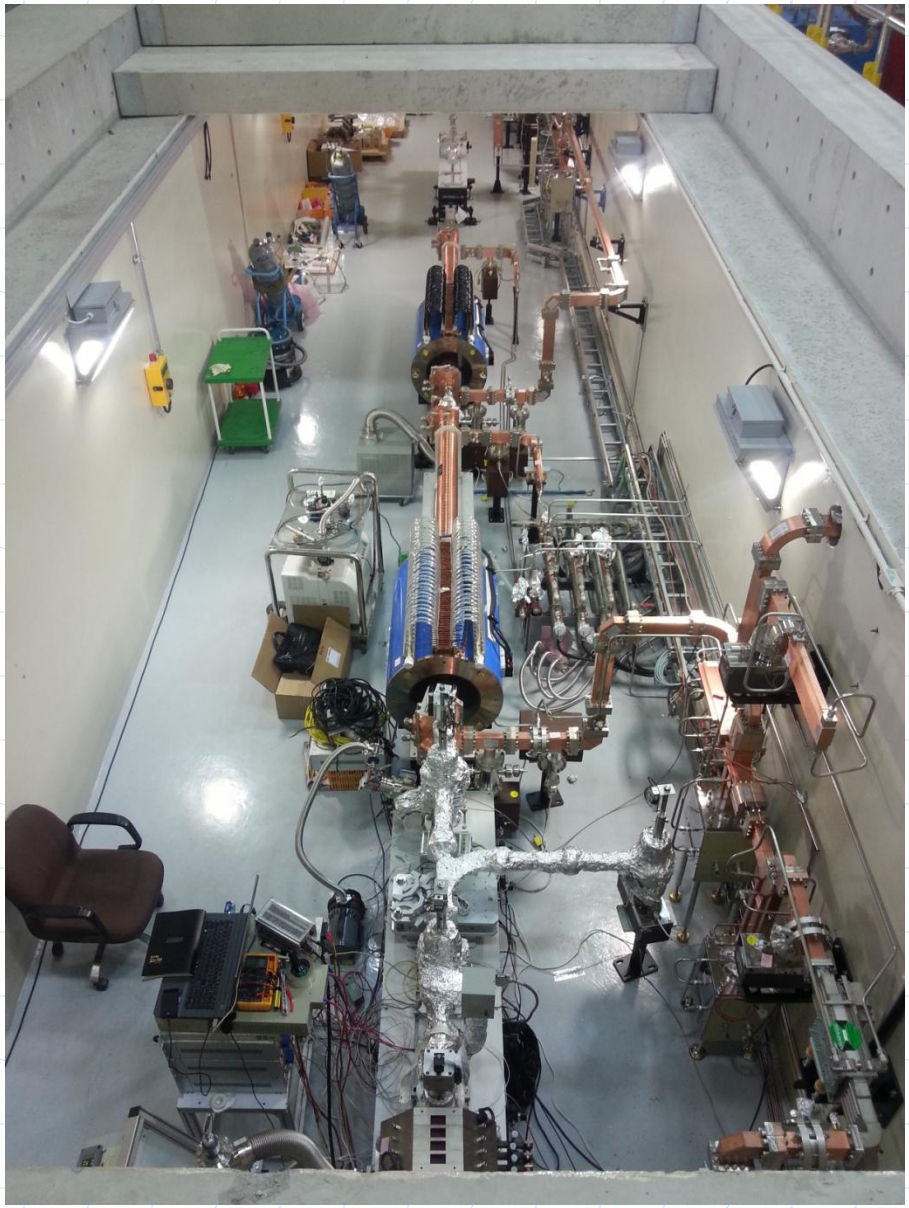

Modulators

- One 120-Hz 80-MW klystron is ordered to Toshiba.
- 4 modulators are procured.
  - 2 units (for ITF) to Dawonsys
  - 1 unit (for ATF) to POSCO ICT
  - 1 unit to Scandinova to test solid state type
  - Production capability of each company will also be checked.

Test Result (tentative)

Stability of PFN Voltage

- PFN charging Voltage : 40kV/60Hz, 운전시작 후 8시간 경과 후 운전 중 약 1분간 측정한 파형임.
- Point of measurement : 10usec before Thyratron switch ON

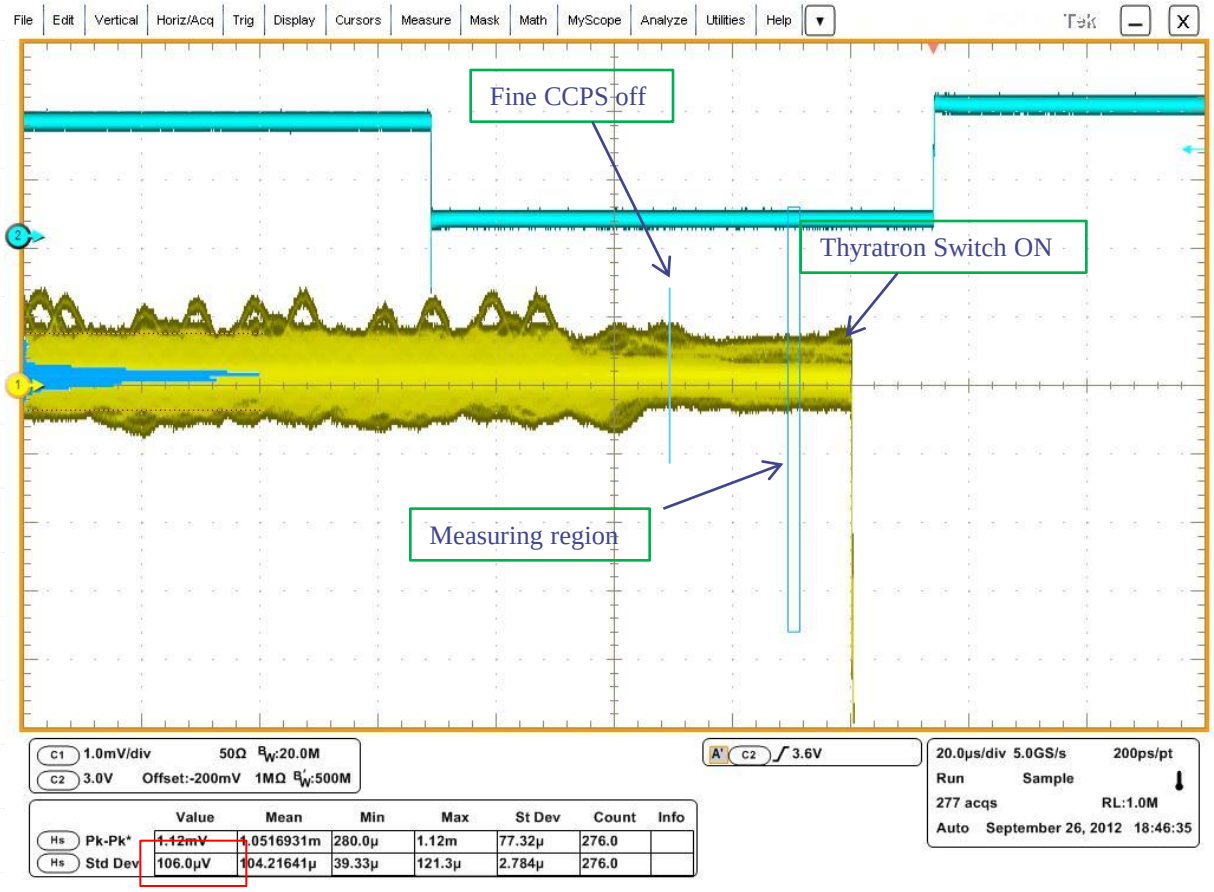

PFN Capacitor : 1.4 [uF]

Output Voltage : 40,000 [V]

Persistence time : 60 [sec]

Repetition Rate : 60 [Hz]

Standard deviation : 106.0 [µV]

[µV]x 5000 = 0.53 [V]

Output Stability : 13.25 [ppm]

RF System

- LLRF
  - Two companies have developed PAD & PAC system
  - Tentative result of PAD
    - Phase: 0.02 degree (peak-to-peak)
    - Amplitude: 0.01% (peak-to-peak)
  - PAC
    - Phase: 0.03 degree (rms)
    - Amplitude: 0.026% (rms)
  - SSA
    - 800 W

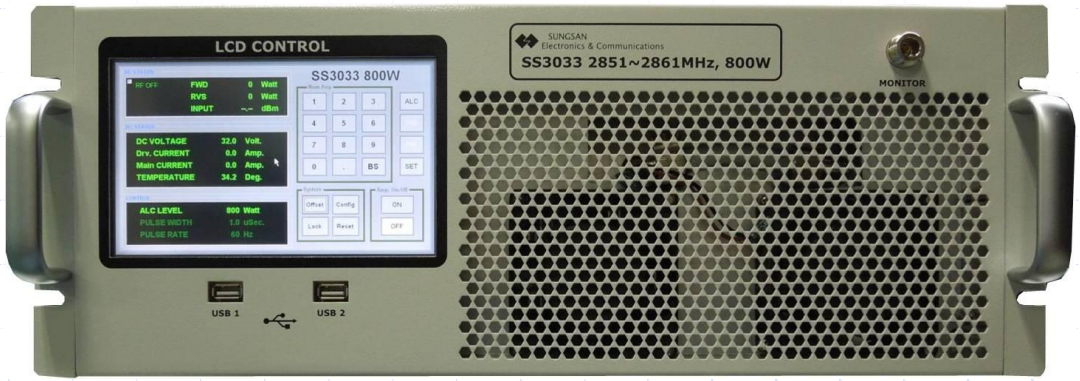

RF Components

- Accelerating Structure
- Energy Doubler
- W/G components
- Domestic company has production capability with facility and some experience
  - Brazing furnace
  - Vertical tuning system for AC being prepared

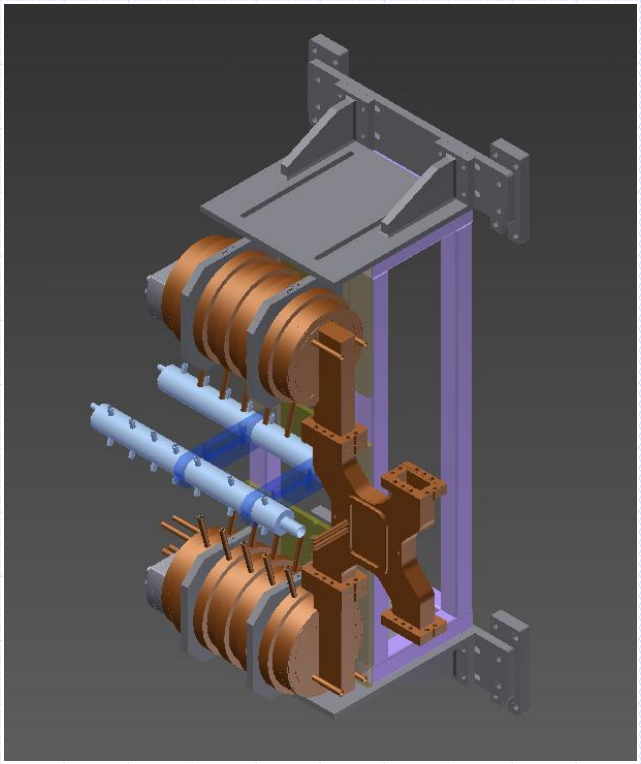

Prototype ID assembled without magnet

Prototype production of ID chamber

Material for test: Al6063T5 = ingot (70%) + scrap (30%)
(This will be changed to 100% pure ingot)

Extrusion

Stretching

Nov 11, 2011

After machining

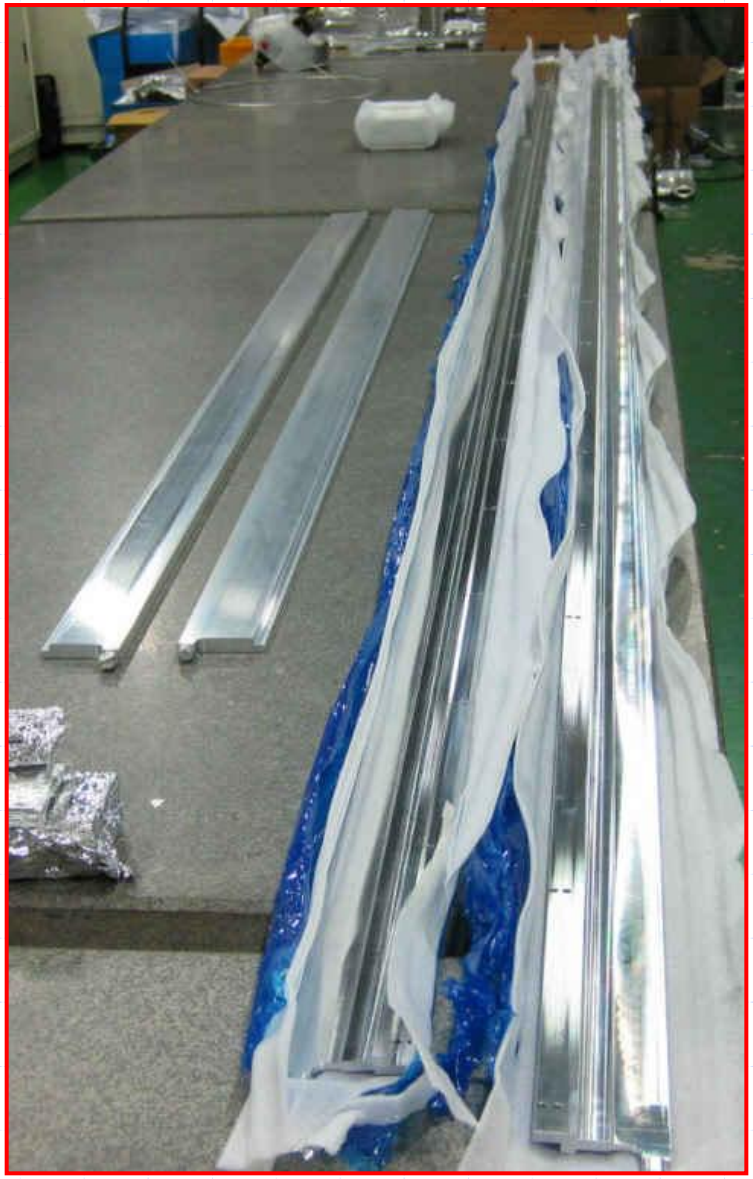

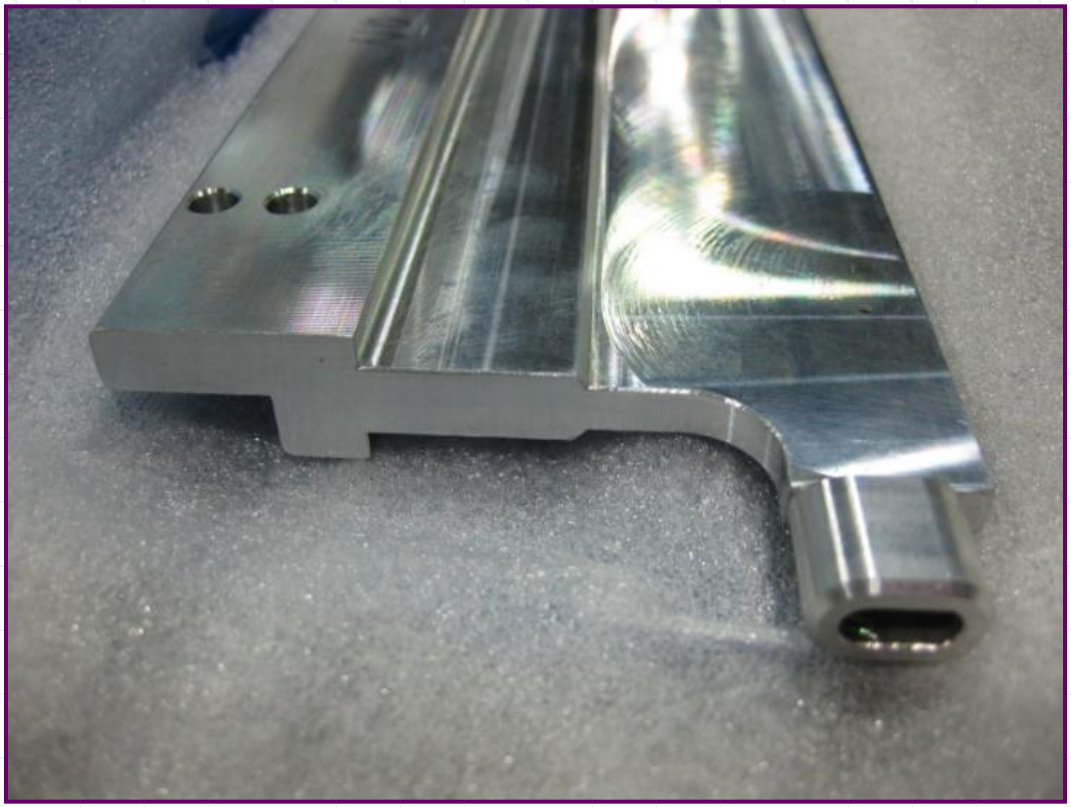

X-band Cavity BPM

PAL Design

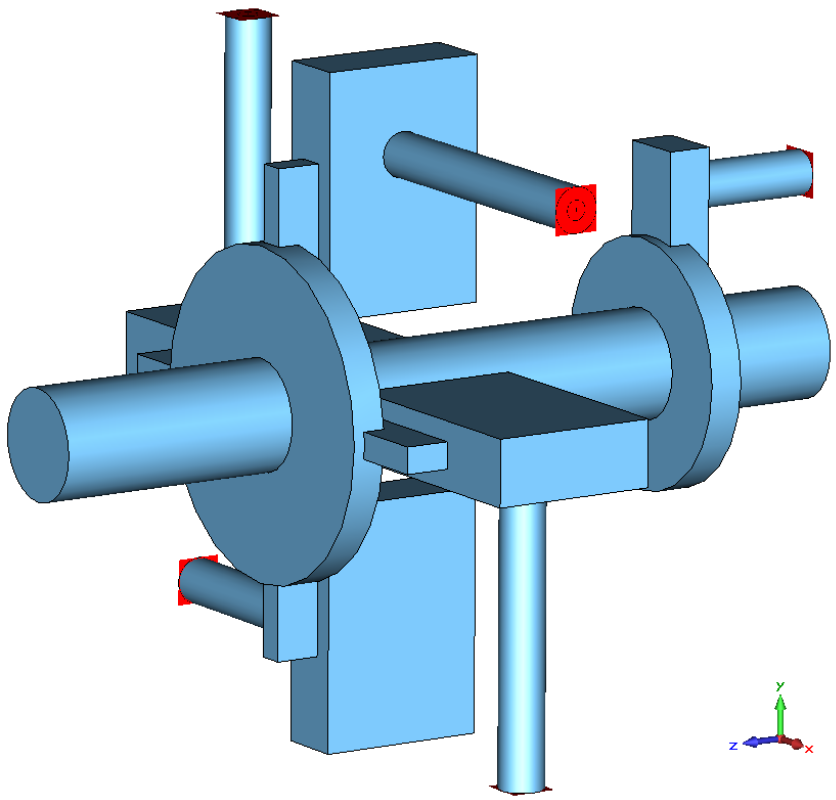

SLAC Design

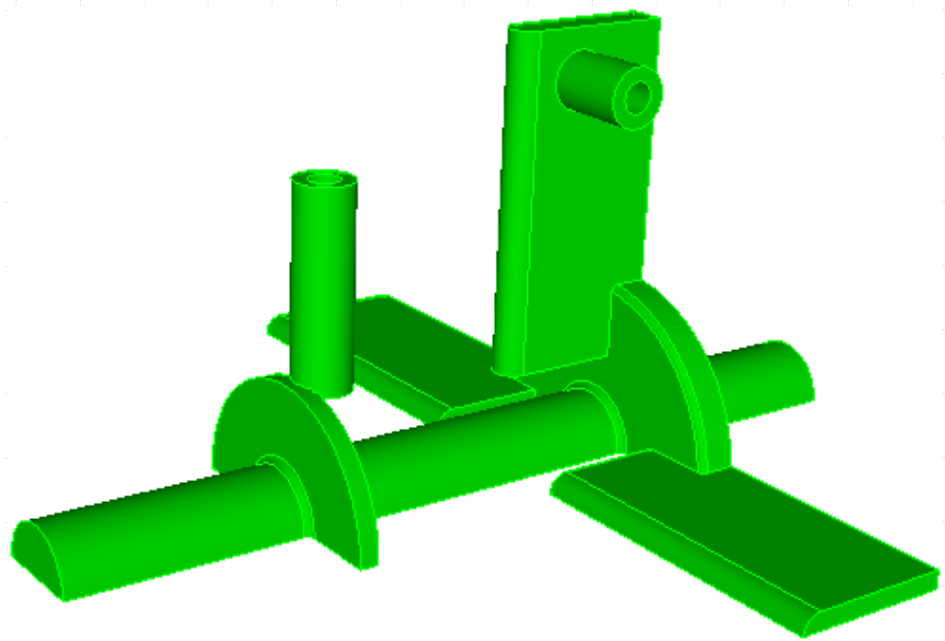

Summary

- PAL XFEL Project: 2011-2014
- Total Cost: 400 MUSD

- Building design completed.
- Construction started in September 2012 (for 27 months).
- Injector Test Facility is being completed.
- Domestic production of Modulator, LLRF, RF components, ID, vacuum chamber are studied.
- ID field measurement system will be ready in February 2013.
- Developing X-band Cavity BPM with a collaboration with SLAC

- With ITF experience, we will finalize PAL-XFEL control scheme.

Thank you for your continuous supports!