EPICS IOCs – Relational DB Connectivity Bridge

A. Liyu, A. Zhukov

EPICS (standard) and SNS architectures

EPICS architecture (standard)

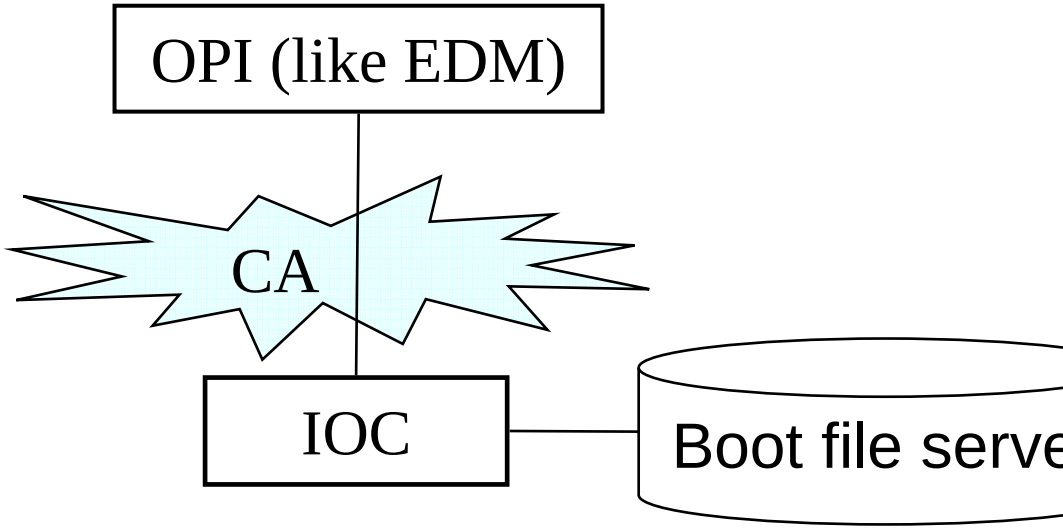

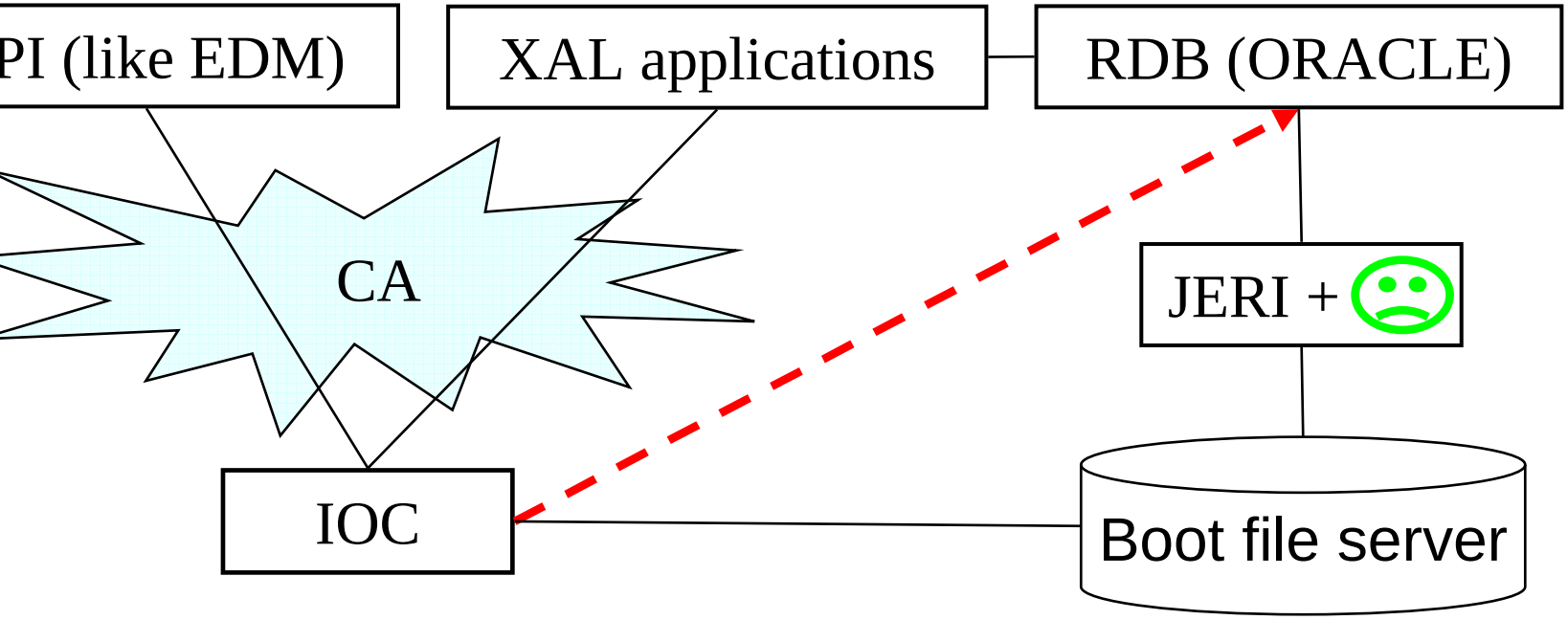

SNS EPICS architecture

Main advantage of single data storage

Single central data storage (RDB)

s and client applications

data from the same place

C and client applications

re always synchronized

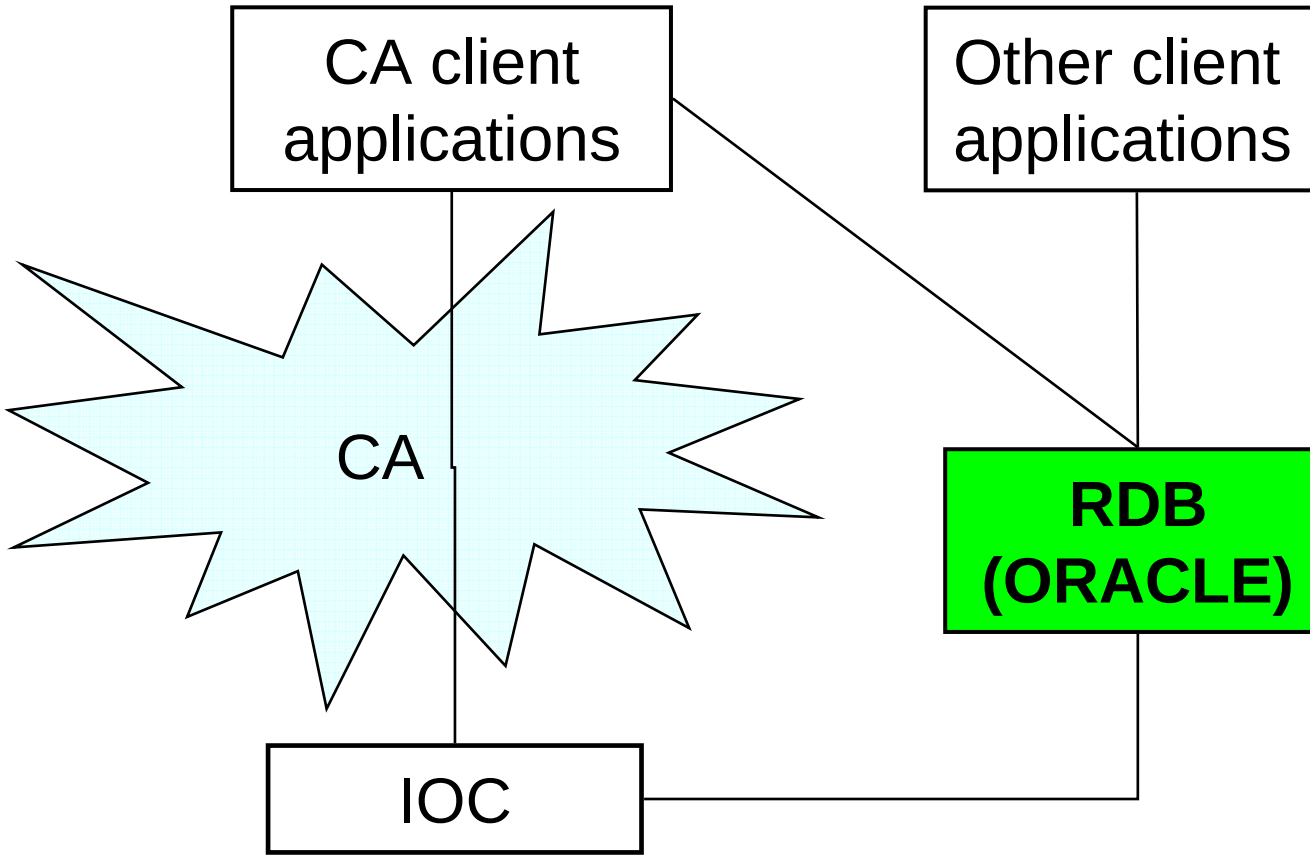

Problems to solve…

- Different IOC operating systems (vxWorks, Linux, Windows, Windows - Shared Memory - LabView…)
  - » Usually RTOSs have no SQL RDB support
- Different Databases (Oracle, MySQL, MS Access…)

… and possible solutions

- Straightforward way: create a RDB driver per each OS-database combination
- Easy way: create intermediate universal server between OS and RDB.

Universal Solution

Requests
TTP
PICS Socket Library
CP/IP

OS independence

Standard Web server –
RDB connectivity:
PHP, JSP, ASP

RDB independence

IOC

Any Web server
(on Linux,
Windows…)

Apache is fine

RDB
(ORACLE)

emo: test-diag-ioc-blm1 retrieves files from RDB

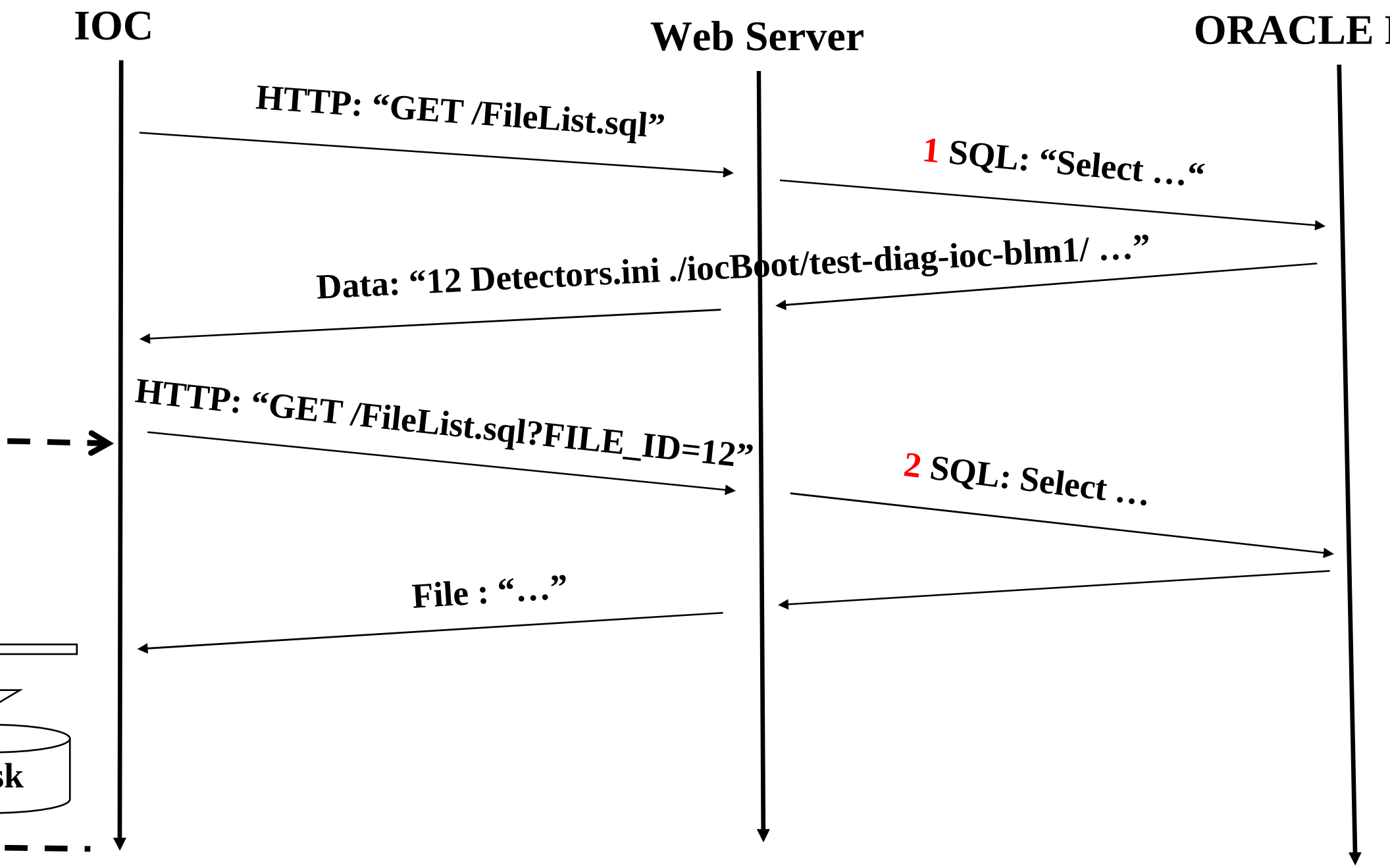

Demo: test-diag-ioc-bim1 retrieves files from RDB

- IOC requests file list from Web server
- Web Server looks up IOC’s host name in RDB and returns list of file names, paths and IDs for this particular IOC
- IOC requests a file having specific ID from Web Server
- Web Server requests the file from RDB and returns to the IOC
- IOC writes the file to disk

Demo: RDB structure

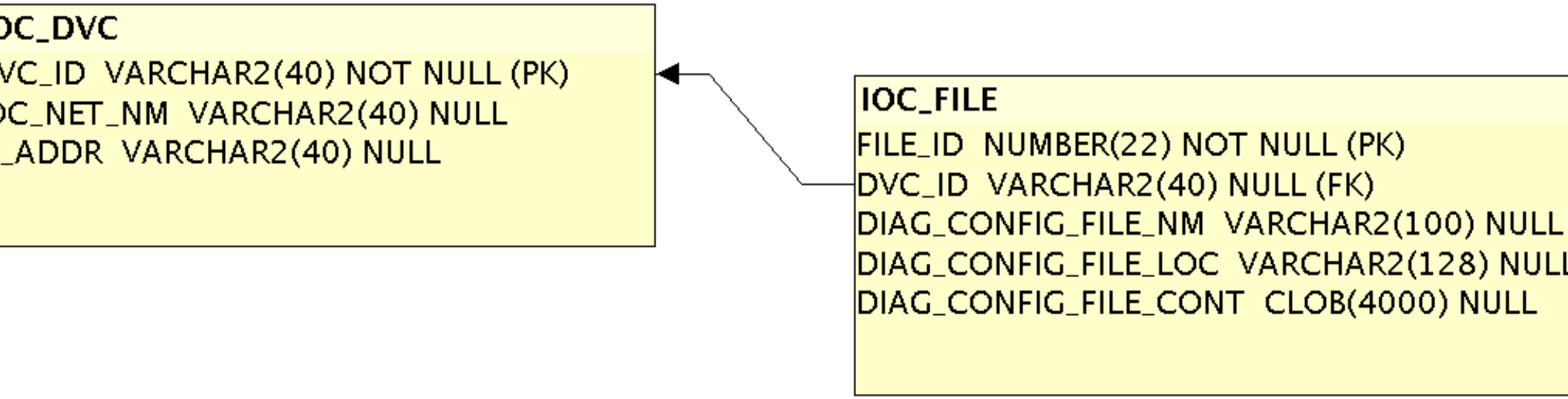

select file_id, DIAG_CONFIG_FILE_NM, DIAG_CONFIG_FILE_LOC from
z9.ioc_file inner join az9.ioc_dvc on az9.ioc_file.dvc_id=az9.ioc_dvc.dvc_id
here IOC_NET_NM='$(REMOTE_SHORTNAME)'

select diag_config_file_cont from az9.ioc_file where FILE_ID=$(FILE_ID)

emo: test-diag-loc-blm1 retrieves files from RDB

- #st.cmd
- …
- cd topbin
- ld < blm.munch
- cd top
- hostAdd(“audit”,”192.168.240.46”)
- vFGetFilesByHTTP(“audit:8080”)
- cd top
- dbLoadDatabase(“dbd/blm.dbd”,0,0)
- blm_registerRecordDeviceDriver(pdbbase)
- …

Current status at SNS

s approach is being implemented for diagnostics devices
Ms and BLMs). We will start using RDB as a file storage for
Cs (as initial step).

- BPMs use Windows based IOC with LabVIEW: ~200 PCs
  - » Configuration files will be downloaded from RDB (instead of storing them locally on PC)
- BLMs use vxWorks IOC: 14 IOCs with ~400 detectors
  - » Substitution, autosave and other ini files will be downloaded from RDB to bootserver during IOC boot process

Next possible steps

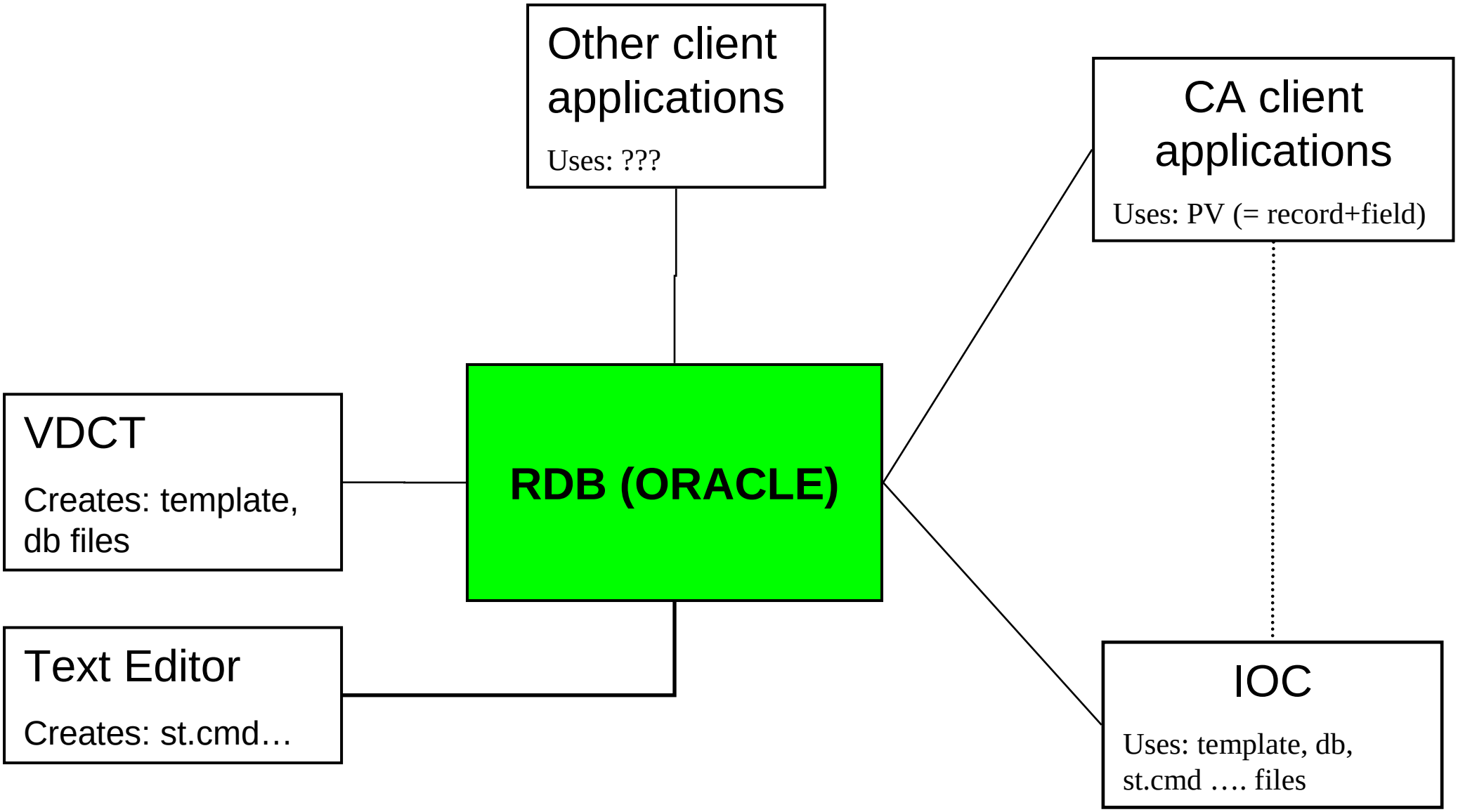

Next possible steps (continued)

RDB (IRMIS ?)

- RDB definitions for Records, Drivers, …
- Definition of interface to RDB

RDB clients

- VDCT changes
- IOC changes
- …