The FEL development at the Advanced Photon Source

S.V. Milton*[a], N.D. Arnold[a], C. Benson[a], S. Berg[a], W. Berg[a], S.G. Biedron[a], Y.C. Chae[a], E.A. Crosbie[a], G. Decker[a], B. Deriy[a], R.J. Dejus[a], P. Den Hartog[a], R. Dortwegt[a], M. Edrmann[a], Z. Huang[a], H. Friedsam[a], H. P. Freund[b], J.N. Galayda[a], E. Gluskin[a], G.A. Goeppner[a], A. Grelick[a], J. Jones[a], Y. Kang[a], K.-J. Kim[a], S. Kim[a], K. Kinoshita[a], R. Lill [a], J.W. Lewellen[a], A.H. Lumpkin[a], G.M. Markovich[a], O. Makarov[a], E.R. Moog[a], A. Nassiri[a], V. Ogurtsov[a], S. Pasky[a], J. Power[c], B. Tieman[a], E. Trakhtenberg[a], G. Travish[a], I. Vasserman[a], N. Vinokurov[d], D.R. Walters[a], J. Wang[a], X.J. Wang[f], B. Yang[a], S. Xu[a]

[a]Advanced Photon Source, Argonne National Laboratory, Argonne, IL 60439
[b]Science Applications International Corp., McLean, VA 22102
[c]Argonne Wakefield Accelerator, Argonne National Laboratory, Argonne, IL 60439
[d]Budker Institute of Nuclear Physics, 630090 Novosibirsk, Russian Federation
[f]Accelerator Test Facility, Brookhaven National Laboratory, Upton, NY 11973

ABSTRACT

Construction of a single-pass free-electron laser (FEL) based on the self-amplified spontaneous emission (SASE) mode of operation is nearing completion at the Advanced Photon Source (APS) with initial experiments imminent. The APS SASE FEL is a proof-of-principle fourth-generation light source. As of January 1999 the undulator hall, end-station building, necessary transfer lines, electron and optical diagnostics, injectors, and initial undulators have been constructed and, with the exception of the undulators, installed. All preliminary code development and simulations have also been completed. The undulator hall is now ready to accept first beam for characterization of the output radiation. It is the project goal to push towards full FEL saturation, initially in the visible, but ultimately to UV and VUV, wavelengths.

Keywords: Advanced Photon Source, APS, free-electron laser, FEL, self-amplified spontaneous emission, SASE, injector, linac, undulator, diagnostics

1. INTRODUCTION

Synchrotron light sources are presently in their third generation, where a generation can loosely be defined by the available source brightness. The accelerator community has been developing ideas to push beyond the present third generation and so usher in the next or fourth generation of light sources together with the scientific explorations pursued with these sources. However, until recently there was no clear consensus on how a fourth-generation light source should be built or what technology it should exploit. At an International Committee for Future Accelerators (ICFA) workshop held in January 1996 at the European Synchrotron Radiation Facility (ESRF)[1], many credible ideas for a fourth-generation light source were discussed. Clearly, the resulting science must drive the source development. Achieving significantly higher brightness figures in the x-ray wavelength range was an agreed upon goal. Among the ideas that could possibly lead to such gains in brightness was the free-electron laser (FEL), based on the self-amplified spontaneous emission (SASE) mode of operation, which is driven from an electron beam generated from a photocathode rf gun and accelerated by a linac. At the time of the workshop a linac-based low-energy undulator test line (LEUTL) was being constructed at the Advanced Photon Source (APS).[2,3] Based on the accessibility to this facility, it was decided that the APS would pursue a fourth-generation prototype using the linac-based FEL concept described above. Following the ICFA workshop at ESRF, there has been considerable effort expended at the APS to build a proof-of-principle prototypical fourth-generation

* Correspondence: Email: milton@aps.anl.gov, Telephone: 630 252 9101, Fax: 630 252 5703

Part of the SPIE Conference on Free-Electron Laser Challenges II
San Jose, California • January 1999 SPIE Vol. 3614 • 0277-786X/99/$10.00

experiment with ambitions to ultimately use this facility to explore and understand the basic principles of such a device and to use its output for preliminary user experiments.

Here, an overview of the APS SASE FEL project will be presented. The system is composed of a set of high-brightness electron guns, a laser system for driving the photocathode rf electron gun, the APS linac, a transfer line from the linac to the undulator hall, a 50-m undulator hall, and an end-station building. The capabilities of the electron gun systems, the APS linac, and the undulator system will be reviewed. Finally, a schedule of the project will be given.

2. APS SASE FEL PARAMETERS

Drawing from theory, simulation, and experimental data, a reasonable set of parameters was chosen to insure a good chance of success at achieving full FEL saturation with the APS linac system.[4] The project uses proven electron beam generation, accelerator, and undulator technology, so that effort could be concentrated on making the complete system function as a whole. The idea was not to develop anything new, but to put together an end-to-end experimental test of the SASE process down to wavelengths never before achieved.

The APS SASE FEL will progress in a series of phases. Table 1 gives the general beam and undulator line parameters used for project planning. Table 2 gives the specifics of the parameters at each phase. These are the electron beam parameters required to reach saturation, in a sufficiently short length. The generation of such a beam will be discussed in section 3.

The undulators are similar to those commonly used at the APS and, in fact, will eventually be used in the APS storage ring. They will be arranged along the beamline in a series of undulator cells. Each cell consists of a 2.4-m undulator with additional space for a combined quadrupole/corrector magnet and electron and light diagnostics. The project currently has two measured and mounted undulators, which will be installed after the line is characterized with the first electron beam. Up to ten undulators will be available to the project by the end of this calendar year. Figure 1 shows a plan view of the undulator hall with the first two undulator cells installed.

Parameter	*Value*
Normalized Emittance (π mm mrad)	3
Peak Current (A)	300
Energy Spread (%)	0.1
On-Axis Undulator Strength	10.06 kG
λ_{und} (cm)	3.3 cm
K	3.1
Undulator Cell Length	2.7

Table 1: General beam and undulator line parameters.

Parameter	*Phase I*	*Phase II*	*Phase III*
Beam Energy (MeV)	217	457	700
λ_R (nm)	530	120	51
L_{gain} (m)	0.4	0.72	1.2
L_{sat} (m)	8.7	15	24
P_{peak} (MW)	260	270	200
B_{peak}*	5	20	37

*photons/sec/mm^2/mrad^2/0.1% bandwidth

Table 2: The parameters of the three phase APS SASE FEL

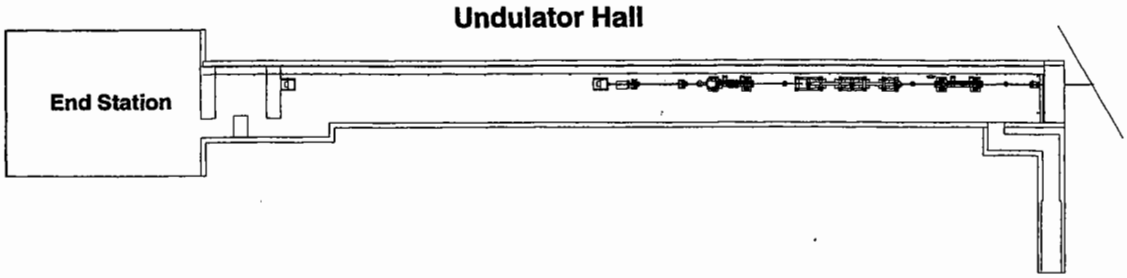

Figure 1: The undulator hall upon completion.

3. GUN SYSTEMS

3.1 The thermionic rf gun systems

A thermionic rf electron gun system operating at 2856 MHz (S-band) was installed in the APS linac just downstream of the original APS injector, a DC-thermionic electron system. This system includes a 1.6-cell gun with an imbedded tungsten dispenser cathode; a beam transfer line consisting of quadrupoles, correctors, and diagnostics; a beam chopper system, designed to limit the total beam macropulse duration to a 40-ns burst; and an alpha magnet to temporally compress the beam before it enters the linac.[5] The gun runs in an effective π-mode with up to 7 MW of forward rf power supplied to the full cell. Power transfer to the cathode cell is accomplished by a coupling cell. Currents of up to 1.3 A can be extracted from the cathode and accelerated up to an energy of 4.5 MeV. We expect to achieve peak beam currents of up to 150A with a normalized emittance of 5π mm-mrad and an energy spread of 1% at the entry to the APS linac. In addition to its role in the commissioning of the APS SASE FEL, the thermionic rf gun system is currently and will continue to be operated full-time for routine APS storage ring fills.

For operational reasons related to an APS goal of pursuing top-up operations within the storage ring, all accelerator systems have been converted from positron to electron operations.[6] Also, to enhance the reliability of operation in this mode, an additional thermionic rf gun system with alpha magnet has recently been installed just upstream of the first thermionic rf gun system. It will serve as a functional spare, should the primary thermionic rf gun system malfunction. The electron beam quality from this spare thermionic rf gun is not suitable for FEL applications; however, its existence will permit the original DC-thermionic gun to be replaced with a high-performance photocathode rf gun. Figure 2 shows the existing layout in the area of the functional spare and main thermionic rf gun and the respective compression magnets.

3.2 The photocathode rf gun and drive-laser system

In February of 1998, the Accelerator Test Facility (ATF) at Brookhaven National Laboratory (BNL) agreed to lend the APS a copy of the fourth version of their photocathode rf gun system complete with the emittance compensation solenoid. This photoinjector system is ideal for generating the high-brightness electron beam required to drive a linac-based SASE FEL. The 1.6-cell S-band fully symmetrized photocathode rf gun system is capable of running at 50-Hz repetition rates with field gradients up to 125 MV/m at the cathode surface, yielding electron energies up to 5 MeV. With a copper cathode and the emittance compensation solenoid, this gun can readily produce 1 nC of charge and generate peak currents of 300A while maintaining the normalized emittance of 3 π mm-mrad.[7]

The drive-laser system used for the photocathode gun is composed of a mode-locked, diode-pumped Nd:Glass oscillator coupled to a Nd:Glass regenerative amplifier. The oscillator is capable of producing 260 fs FWHM bandwidth-limited pulses centered at 1053 nm at a 119-MHz repetition rate. The oscillator average output beam power is approximately 100 mW and is timing stabilized to < 1 ps rms. The regenerative amplifier is capable of producing 5 mJ in infrared (IR) and, after frequency quadrupling to the ultraviolet (UV), ~400 μJ. Some bandwidth is lost during the amplification and so the shortest pulse out of

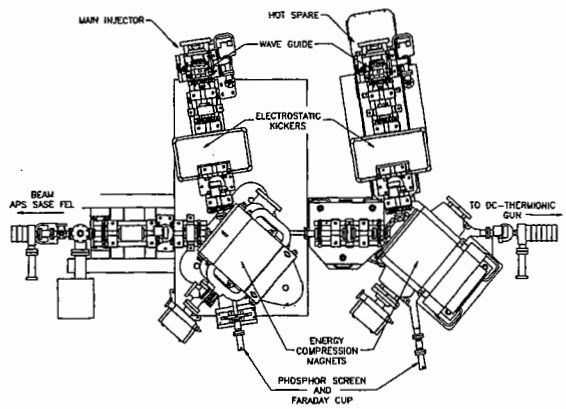

Figure 2: The APS linac front end with the two thermionic rf guns and compression magnets.

the amplifier is roughly 1.5 ps. This is sufficiently short based on the requirements of the photoinjector and actually could be easily lengthened if so desired. Since the energy in the UV is very high, we plan to begin operation with a copper cathode, instead of the higher-quantum efficiency Mg, which suffers from a shorter cathode lifetime and requires frequent rejuvenation through laser cleaning.

During the summer of 1998, an rf test area and laser area were constructed in an area at the head of the APS linac. To house the drive-laser system and provide an area for testing rf components, such as rf guns, before their installation in the linac. Both areas have 40 inches of concrete separating them from the adjacent linac enclosure. This allows for occupation of both the rf test and laser areas during standard APS linac operation as well as operation of the rf test area while the linac enclosure is occupied. The rf test area and the laser area are further separated from each other by sufficient shielding to allow occupation of the laser area while testing of components in the rf test area is underway. The laser area is conveniently situated parallel to the linac and adjacent to the rf test area. Also, the laser area is outfitted with the necessary temperature and humidity controls to preserve laser stability and is maintained as a clean-room area.

Initial testing of the photocathode rf gun is being carried out within the rf test area. This area has a dedicated rf power source that was used to fully condition the photocathode rf gun up to 8 MW (~110 MV/m) with an rf pulse of 1.5 μs. Generation of the first photoelectrons will occur when the laser system and optics are complete.

Figure 3 shows an elevation drawing of the head of the linac after installation of the photocathode rf gun, which will occur in March, while Figure 4 shows the linac vault, with the rf test and laser areas.

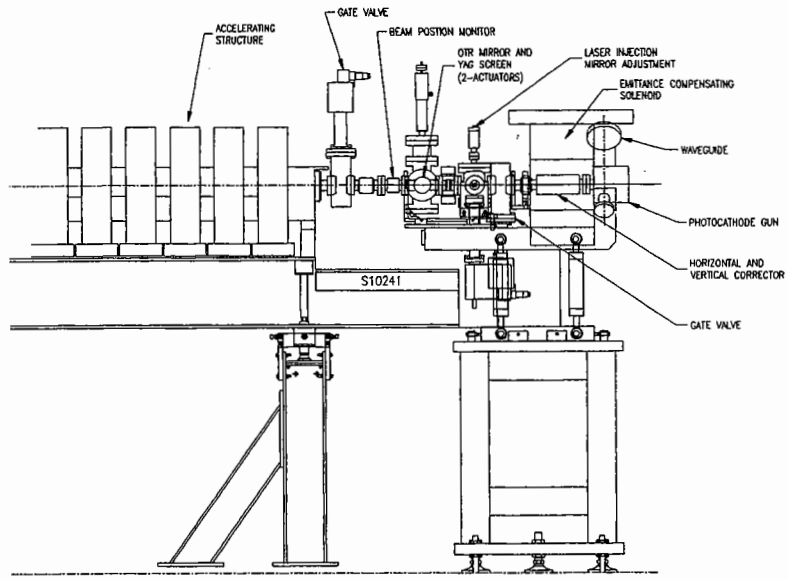

Figure 3: The proposed linac front end after the installation of the BNL-ATF photocathode rf gun.

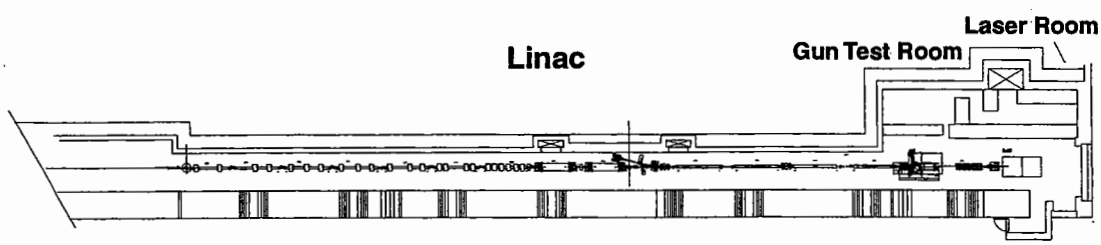

Figure 4: The rf test area, laser area, and APS linac layout.

3.3 The ballistic compression rf gun system

In addition to the previously described electron gun systems, a fourth rf gun system is under development at the APS. This system, referred to as the ballistic bunch compression rf gun system[8], may use either a photocathode or thermionic cathode. It operates by manipulating the longitudinal phase space by using two or more rf cavities driven independently in phase and power. A favorably correlated longitudinal phase space induced in the beam then allows ballistic bunching to naturally occur over a short drift. Further acceleration "freezes" the longitudinally bunched beam. A novel aspect about this system is that it will be modular; the cathode, cathode cell, and *n* number of full cells will be separated by their own rf seals. This will allow for cathode switching (thermionic cathode or photocathode mode) and allow for greater compression and acceleration, based on the number of cells used, which in turn will yield greater peak currents. Table 3 lists the beam quality predicted from simulations using the code PARMELA coupled to an in-house PIC code. These simulations correspond to 1.0 nC of charge emitted from the cathode in a single rf period. The effects of an emittance compensation solenoid were not simulated. Figure 5 shows the design of the ballistic gun; note the separate cells and their corresponding rf seals.

Parameter	*Thermionic Cathode Gun*	*Photocathode Gun*
Number of Cells	2.6	2.6
Cathode Radius and Details	3 mm	2 mm, 10° emission window
Peak Current	1660 A	2880 A
Emittance (normalized, rms)	2.3 π mm mrad	4.7 π mm mrad

Table 3: Ballistic compression rf gun simulations.

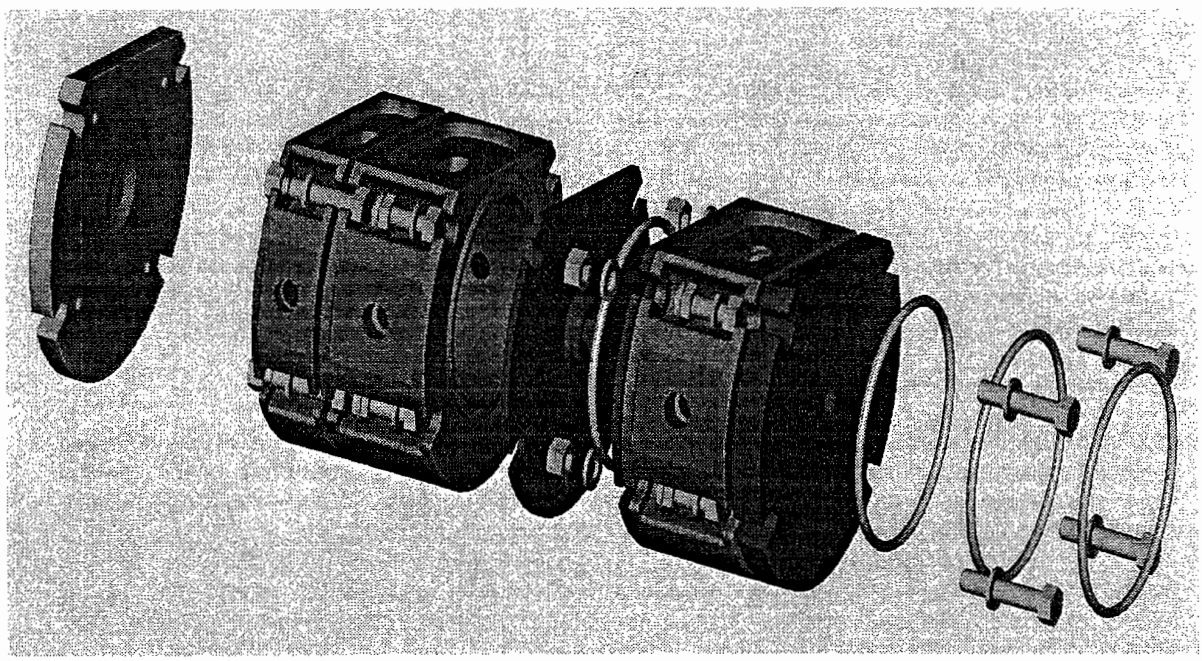

Figure 5: An expanded view of the proposed ballistic rf gun.

The aluminum test cells for the above configuration have been fabricated and are awaiting microwave measurements. After any necessary changes are made to the design, the copper cavities will be fabricated. The required circulators and phase shifters have been ordered. After the ATF-BNL photocathode rf gun system is removed from the rf test area and installed in the linac, the area will be used to test and develop the ballistic bunch compression rf gun system.

4. THE APS SASE FEL LINE

4.1 The APS linear accelerator

The APS linac serves as the main injector for APS operation.[3] There are a total of fourteen 3-m, S-band SLAC-type accelerating structures powered by five 35-MW TH128 pulsed klystrons and the associated 100-MW line-type pulse modulators. The first and sixth accelerating structures are each powered by a single klystron; the remaining twelve are powered in groups of four by a klystron and SLED cavity assembly. This arrangement is the result of previously operating for positron production and acceleration in the linac. Excess power in each structure is dissipated into a water load after exiting the traveling wave structure through a coupling cell. The accelerating structures, SLED cavities, and waveguide components are kept at constant temperature to within 0.1°F to maintain cavity dimensions and, therefore, energy

stability. The modulator and SLED trigger timing in each sector are controlled individually to assure maximum energy gain.

There are two energy analysis bending magnets in the APS linac, both of which are equipped with a beam-position monitor (BPM), Faraday Cup, and fluorescent screen. This allows for rapid energy, energy spread, and current measurements. In addition to these diagnostics, there are eight additional Chromox screens, two optical transition radiation (OTR) screens, and two YAG crystals. Bunch length measurements are performed with a streak camera in conjunction with the OTR screens and a fifth harmonic cavity. There are also various additional BPMs and wall-current monitors throughout the linac. With the exception of the streak camera, all of the above diagnostics have proved useful in automatic feedback control of the linac.

4.2 Transfer lines

Two additional transfer lines were required to connect the linac and undulator hall. These are referred to as the PAR bypass and booster synchrotron bypass lines. (The PAR is the positron accumulator ring, which now actually accumulates electrons.) During APS SASE FEL operation, the beam leaves the linac and enters into the PAR bypass line, where mini-BPMs, standard APS BPMs, and additional Chromox and YAG screens are located. The beam then enters the booster bypass line, which includes a spectrometer magnet, for energy and energy-spread measurements. It is through this booster bypass line that the beam encounters a 1-m increase in elevation. The height excursion is necessary for both component clearance in the booster and radiation enclosure separation. The booster bypass transfer line directs the beam to the new undulator hall enclosure.

4.3 Undulator hall and end station

After entry into the undulator hall, the beam is focused through an undulator string consisting of many undulator cells, whose characteristics are given in Table 1. Located between these undulators are diagnostics stations and combined-function corrector/quadrupole magnets.[9] The undulator hall is long enough to house a string of twelve such cells. Figure 6 shows one undulator cell.

As described in section 2, the undulators are similar to those used in the APS; however, without the variable gap feature. They were produced by STI Optronics, who also performed the preliminary magnetic measurements. Final measurements and tuning are performed at the APS.

Each diagnostics section is capable of measuring the beam position and size via capacitive pickup beam position monitors, secondary emission wire monitors, and a YAG screen. A mirror with a hole in it is also provided to simultaneously pick off a fraction of the generated synchrotron radiation, while allowing passage of the electron beam. Figure 7 shows the details of the diagnostics station.

A separate end station outside the radiation enclosure is also provided. It will initially house a high-resolution spectrometer, a streak camera, and an optical autocorrelator. These will be used for initial characterization of the FEL light. There is ample room in this end station for further expansion of the diagnostic capabilities as well as room for future FEL user experiments.

The undulators are an integral part of the beam optics. Before installation of the first two complete undulator cells, we will install two "Phantom" cells with the undulator replaced by single, vertically focusing quadrupoles. This will allow initial systems checks of the diagnostics and the beam control without any additional complications due to undulator focusing properties.

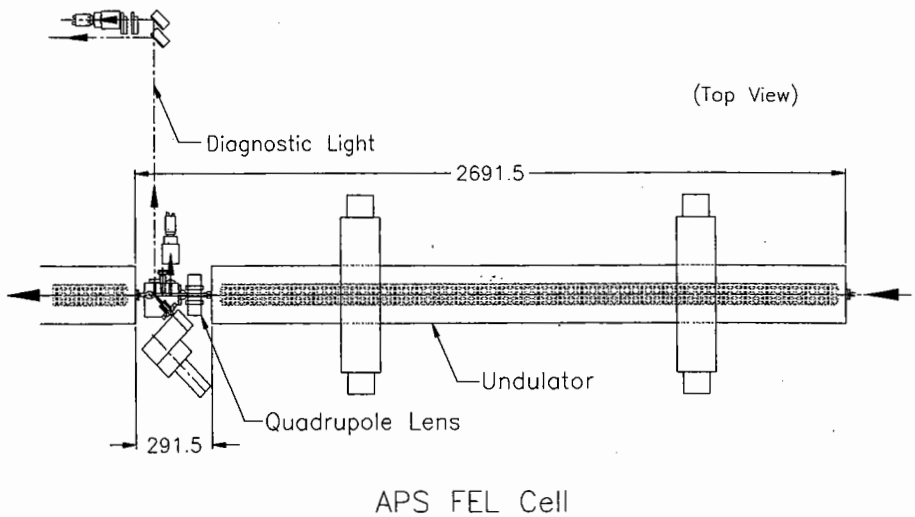

Figure 6: APS SASE FEL undulator cell.

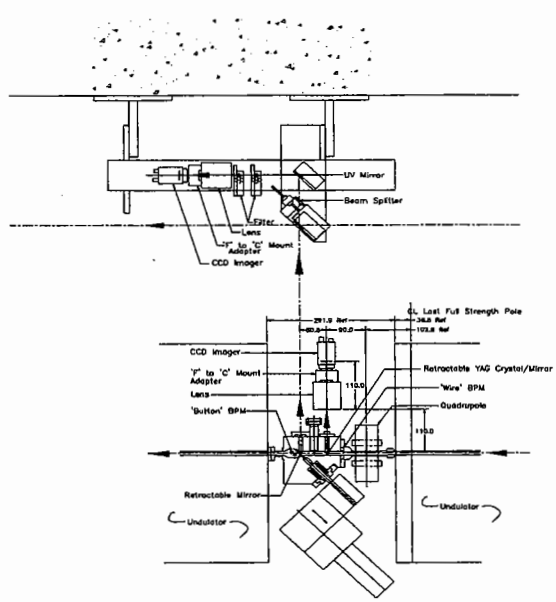

Figure 7: Detailed electron and light beam diagnostics system.

5. SCHEDULE AND SUMMARY

The beamline is complete through the beam dump in the undulator hall. The initial beam tune-up will be performed in February 1999, with beam from the thermionic rf gun. The first two undulators will be installed in place of the temporary quadrupoles in March 1999. New undulators are now arriving from STI Optronics. The complete order of 10 is expected to arrive during 1999. Enough undulators required to reach saturation at 530 nm should be ready for installation by May 1999. FEL saturation at 530 nm should occur sometime in the summer of 1999. Then, additional undulators will be installed, the beam energy will be raised, and testing of SASE FEL operation at progressively shorter wavelengths will proceed. The schedule is shown in Table 4.

Task	*Timescale*
First beam to undulator hall with rf-thermionic gun	Early February 1999
Install photocathode gun in linac	March 1999
Begin gain, saturation measurements	April 1999
Operation at higher energies to produce 120 nm light	December 1999
Install bunch compression at 50 MeV	December 1999
Push to even shorter wavelengths	2000

Table 4: APS SASE FEL schedule.

A prototypical fourth-generation light source based on a SASE FEL operating at wavelengths from the visible to the VUV will be brought on-line at the APS in the coming months. These tests will be ongoing for approximately two years. It is hoped that the lessons learned from these experiences will be used to further reduce the operating wavelengths into the X-ray regime, as planned in the Linac Coherent Light Source (LCLS) project[10], thus leading the way to a future full fourth-generation facility in the X-ray regime.

AKNOWLEDGEMENTS

This work was supported by the U.S. Department of Energy, Office of Basic Energy Sciences, under contract No. W-31-109-ENG-38.

REFERENCES

1. 10th ICFA Beam Dynamics Panel, Workshop on 4th Generation Light Sources, ESRF, Grenoble, January 22-25, 1996.
2. Stephen V. Milton, "The low-energy undulator test line," Proc. SPIE Vol. 2988, p. 20-27, Free-Electron Laser Challenges, Patrick G. O'Shea; Harold Bennett; Eds., May 1997.
3. M. White, N. Arnold, W. Berg, A. Cours, R. Fuja, A. E. Grelick, K. Ko, Y. L. Qian, T. Russell, N. Sereno, and W. Wesolowski, "Construction, Commissioning, and Operational Experience of the Advanced Photon Source (APS) Linear Accelerator," Proceedings of the XVIII International Linear Accelerator Conference, Geneva, Switzerland, 26-30 August, 1996, pp. 315-319 (1996).
4. S. G. Biedron, H.P. Freund, and S.V. Milton, "The development of a 3D FEL code for the simulation of a high-gain harmonic generation experiment," these conference proceedings.
5. J.W. Lewellen, S. Biedron, A. Lumpkin, S.V. Milton, A. Nassiri, S. Pasky, G. Travish, M. White, "Operation of the APS RF Gun," Proceedings of the XX International Linear Accelerator Conference, Chicago, Illinois, August 23-28, 1998, to be published.
6. L. Emery and M. Borland, "Analytical Studies of Top-Up Safety and Operational Experience of Top-Up Injection at the Advanced Photon Source," to be presented and published at PAC99.
7. M. Babzien, I. Ben-Zvi, P. Catravas, J-M. Fang, T.C. Marshall, X.J. Wang, J.S. Wurtele, V. Yakimenko, and L.-H. Yu, Phys. Rev. E **57**, 6039 (1998).

8. John W. Lewellen and Stephen V. Milton, "Preliminary calculations of ballistic bunch compression with thermionic rf gun," Proc. SPIE Vol. 3154, p. 162-171, Coherent Electron-Beam X-Ray Sources: Techniques and Applications, Andreas K. Freund; Henry P. Freund; Malcolm R. Howells; Eds., October 1997.
9. E. Gluskin, et al., "The Magnetic and Diagnostics Systems for the Advanced Photon Source Self-Amplified Spontaneously Emitting FEL," in NIM Proceedings of the 20th International FEL Conference (FEL98), Williamsburg, VA, USA, 1998.
10. LCLS Design Study Group, Linac Coherent Light Source (LCLS) Design Study Report, SLAC-R-521, UC-414.

The submitted manuscript has been created by the University of Chicago as Operator of Argonne National Laboratory ("Argonne") under Contract No. W-31-109-ENG-38 with the U.S. Department of Energy. The U.S. Government retains for itself, and others acting on its behalf, a paid-up, nonexclusive, irrevocable worldwide license in said article to reproduce, prepare derivative works, distribute copies to the public, and perform publicly and display publicly, by or on behalf of the Government.