Suppression of RF System Noise

Tim Berenc & Tom Fors

Workshop on Next-Generation Fast Orbit Feedback Systems for Storage Rings
May 9, 2013

Present Storage Ring Beam Jitter [1]

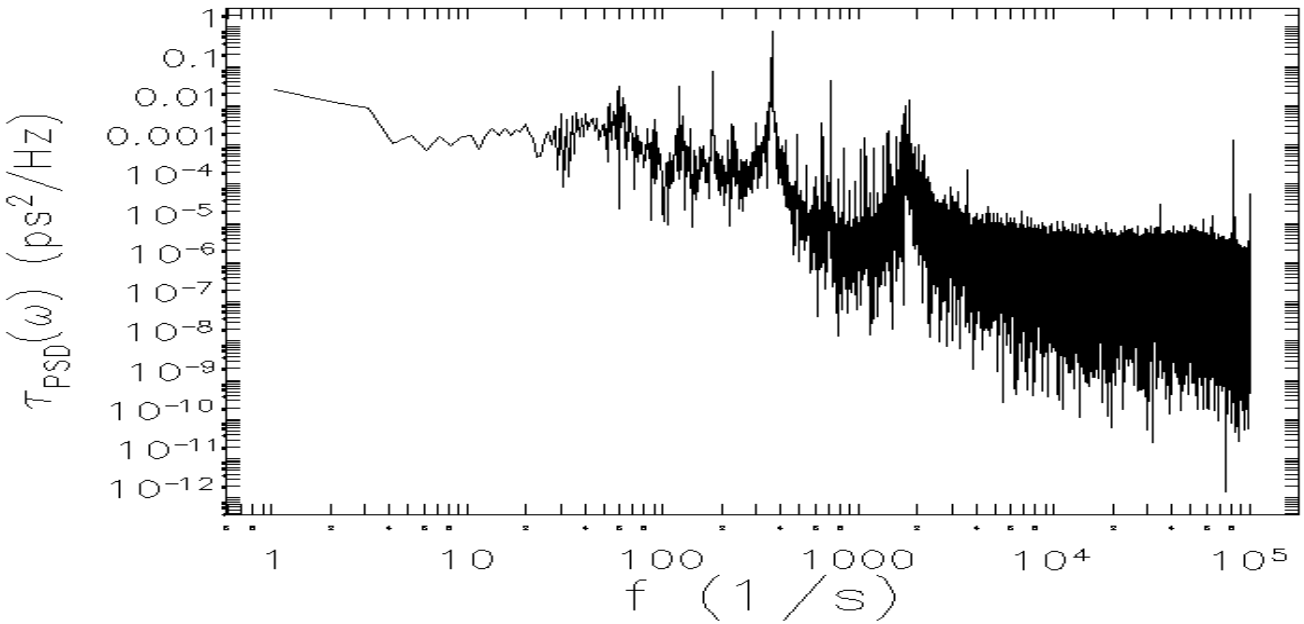

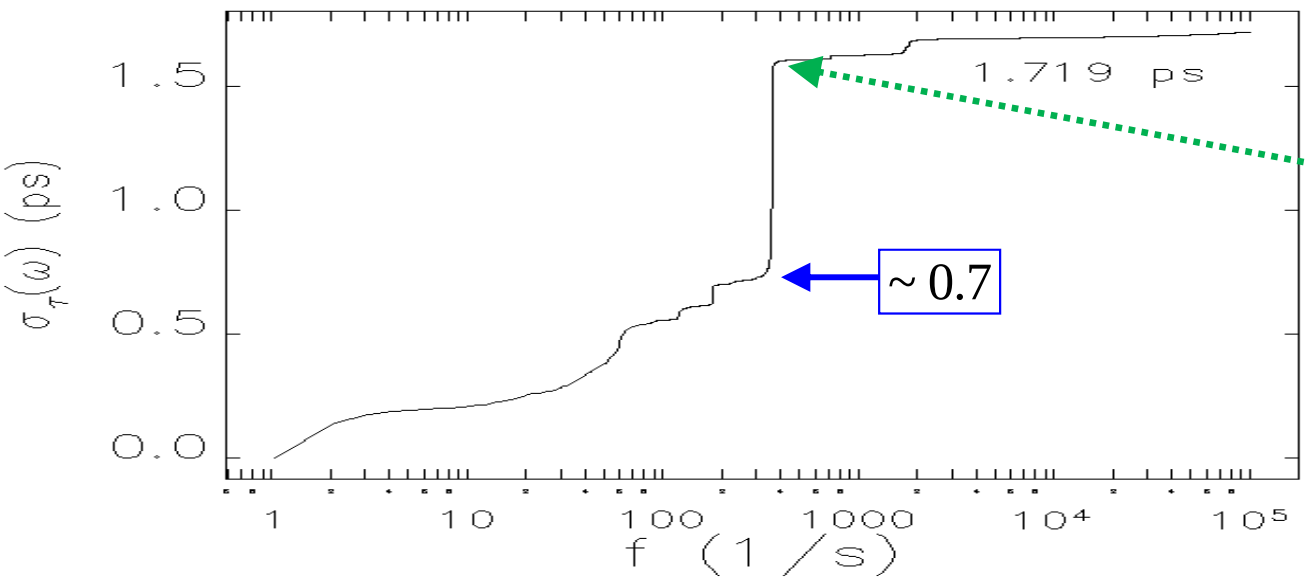

$< 360\ Hz$ $\sim 360\ Hz$

$$\sim 1.65 = \sqrt{0.7^2 + 1.5^2}$$

$-10\ dB$ $$0.86 = \sqrt{0.7^2 + 0.5^2}$$

$-20\ dB$ $$0.72 = \sqrt{0.7^2 + 0.15^2}$$

[1] Sereno et. al, "Storage Ring Phase Noise Studies …" AOP-TN-2012-001

RF System Noise – example measurements

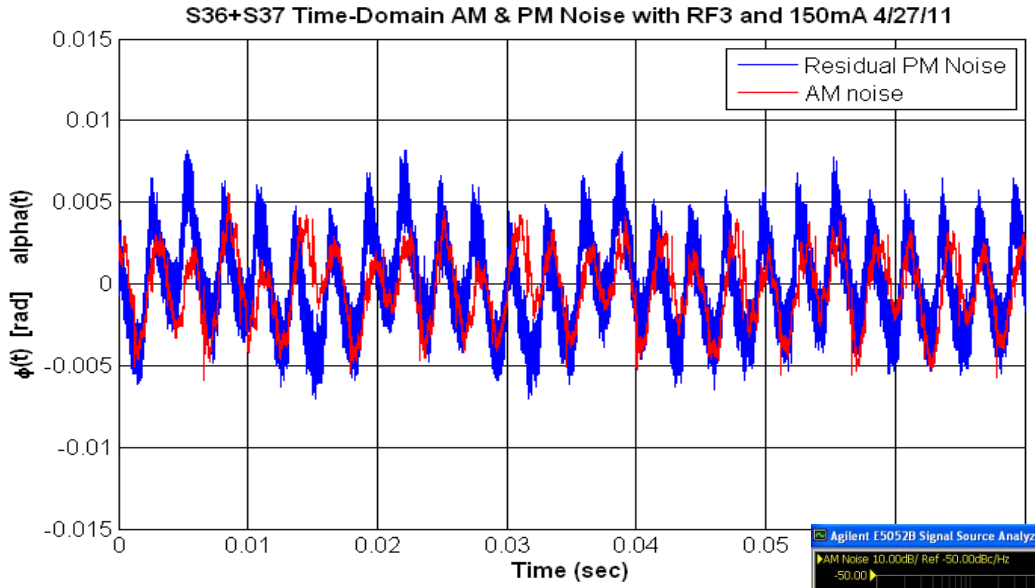

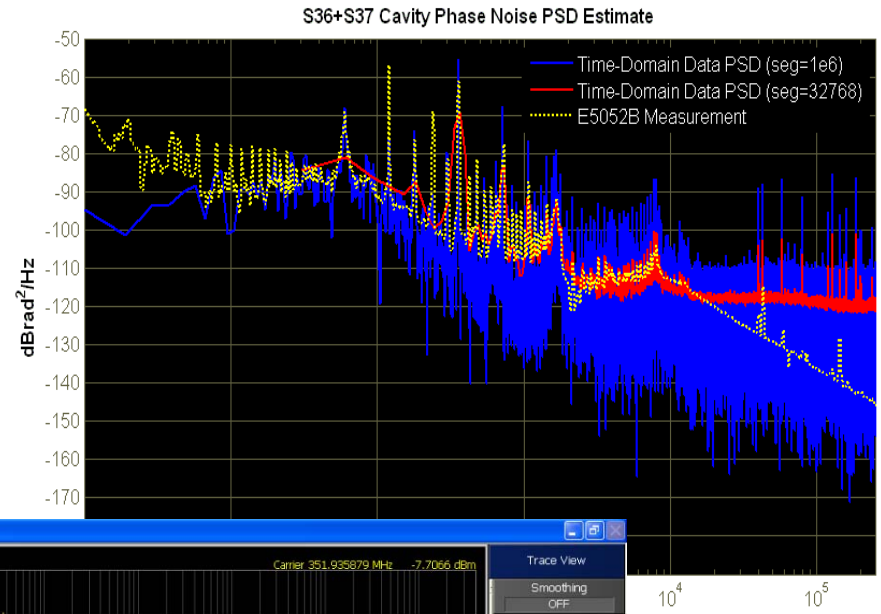

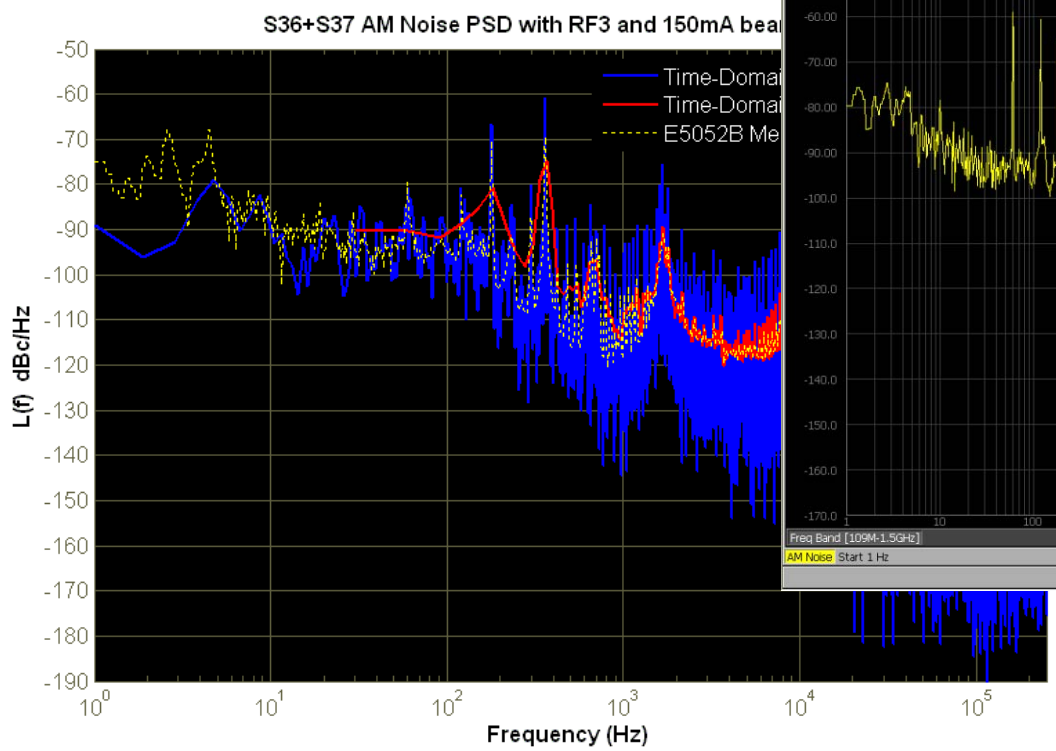

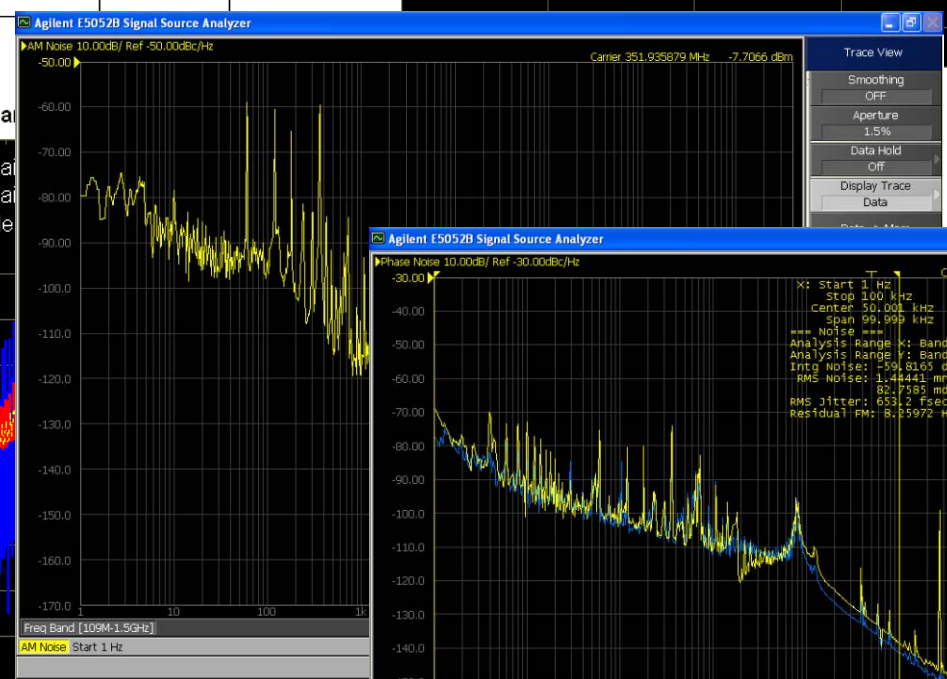

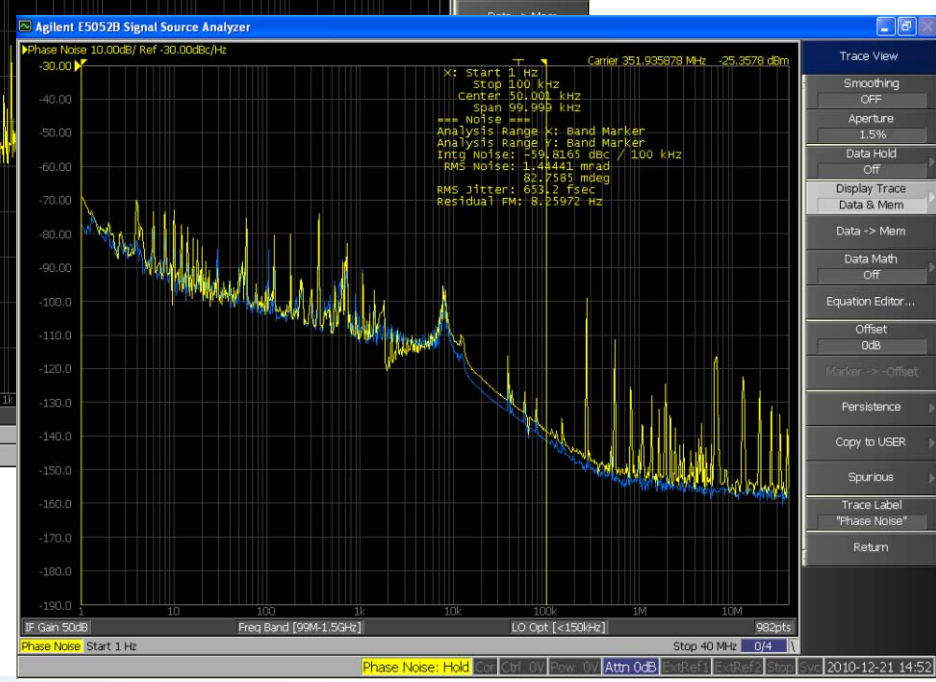

Proof of Principle Feed Forward Experiment

Experiment with 360Hz Feed-Forward correction of Storage Ring Klystron High-Voltage Power Supply (HVPS) induced noise

AM & PM suppression at Both Stations

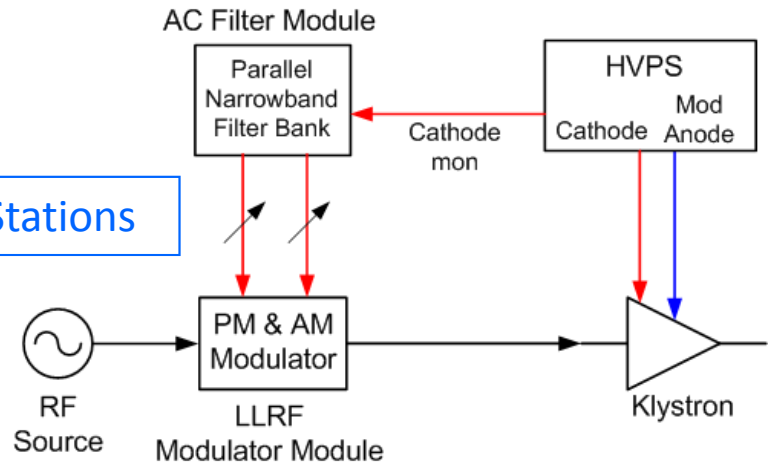

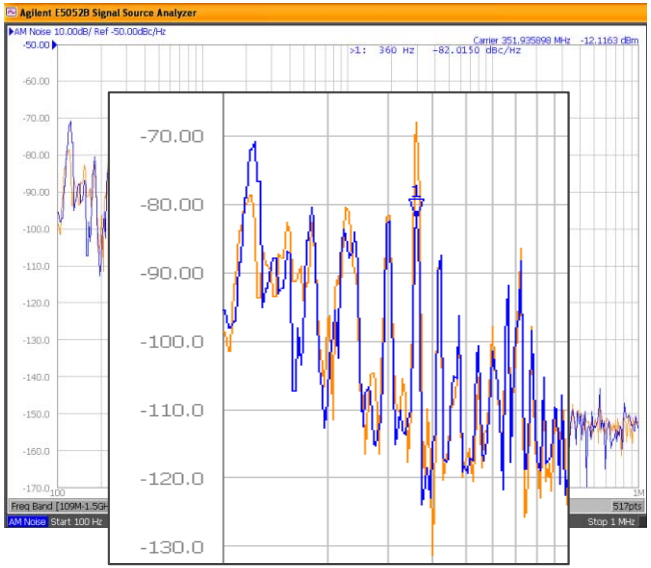

Only had access to amplitude adjustments on the 360Hz correction term

~ 1/3 => ~10dB suppression

Horizontal BPM Data

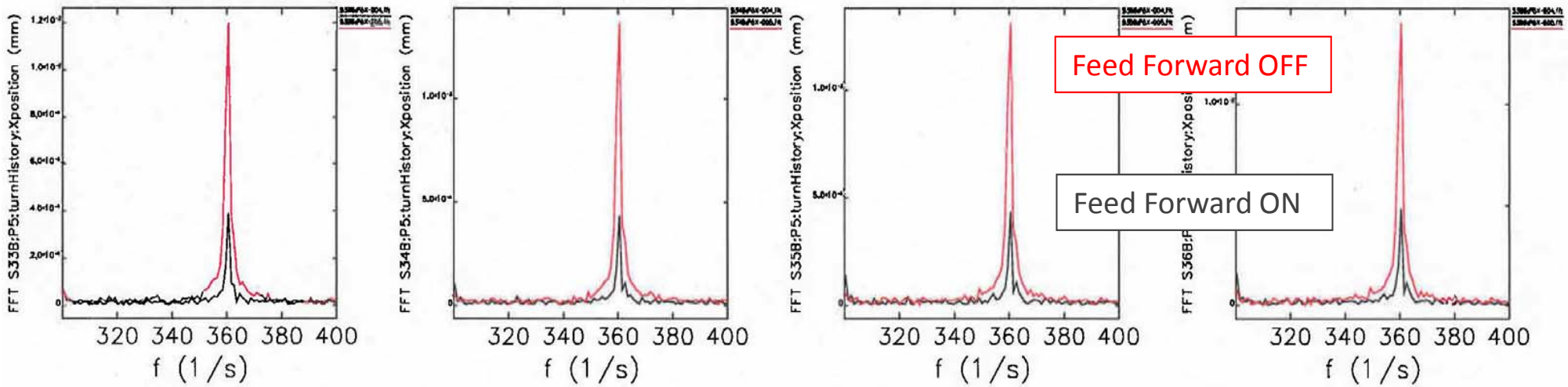

Adaptive Noise Cancellation Concept [2]

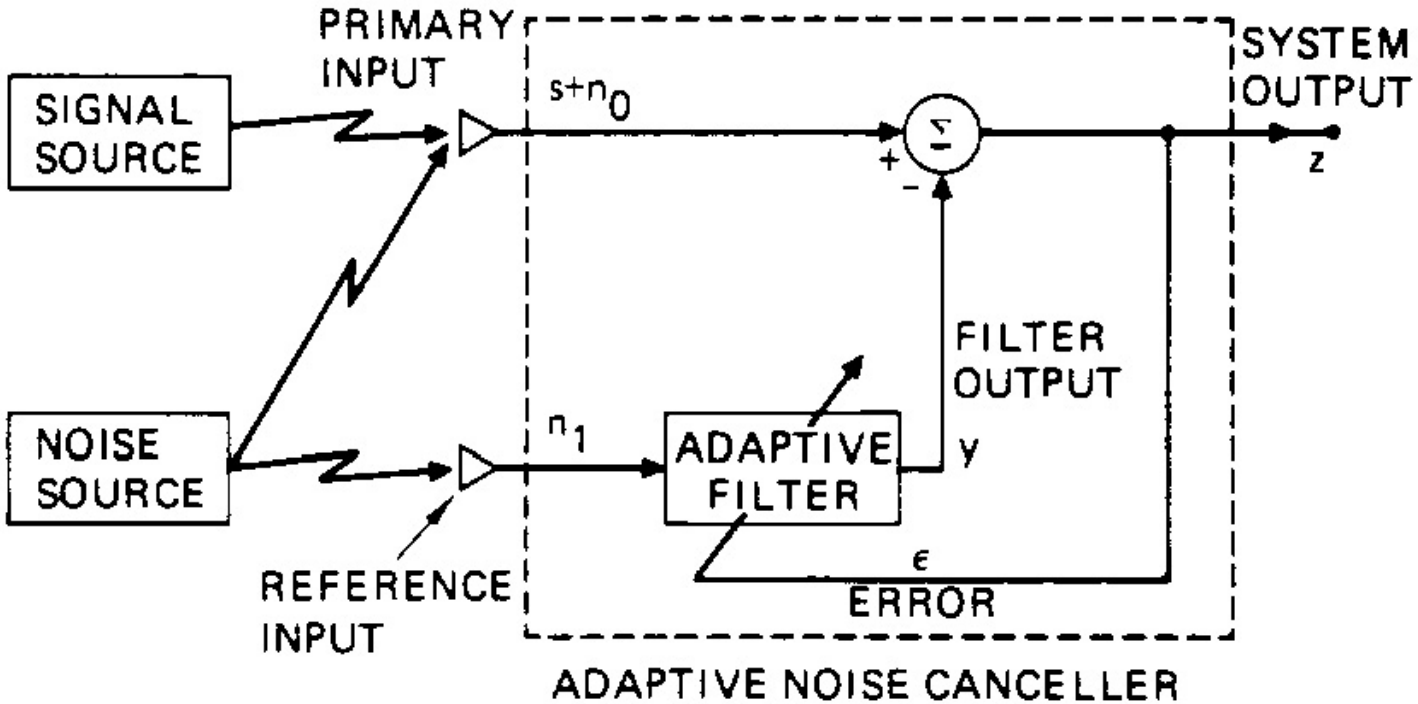

Fig. 1. The adaptive noise cancelling concept.

From [3]

[2] Widrow et. al, “Adaptive Noise Cancelling: Principles & Applications” IEEE Vol. 63, No. 12, Dec. 1975

Adaptive Noise Cancellation Concept [2]

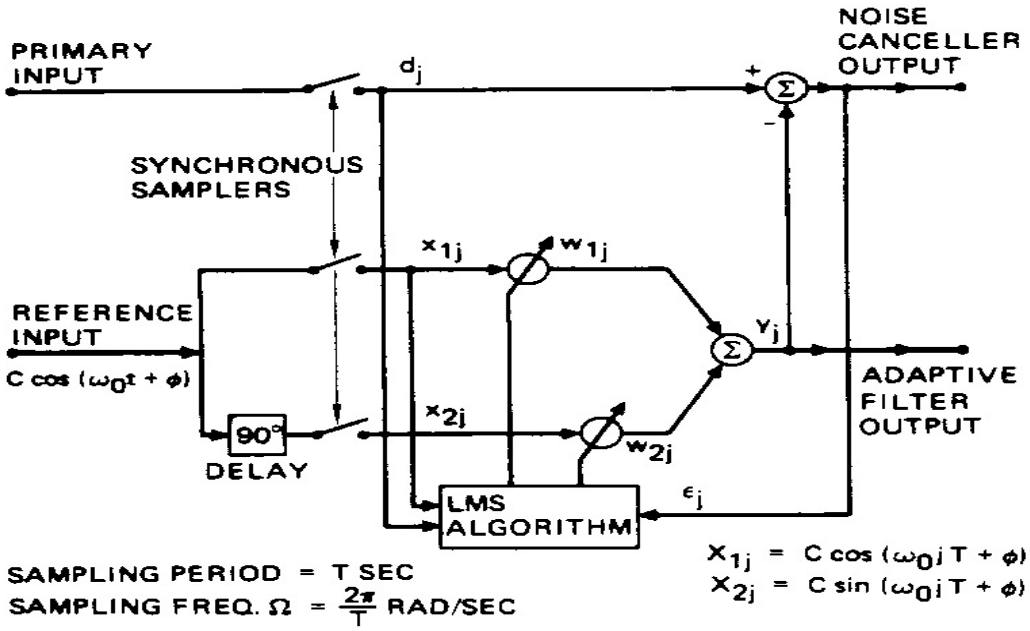

Fig. 6. Single-frequency adaptive noise canceller.

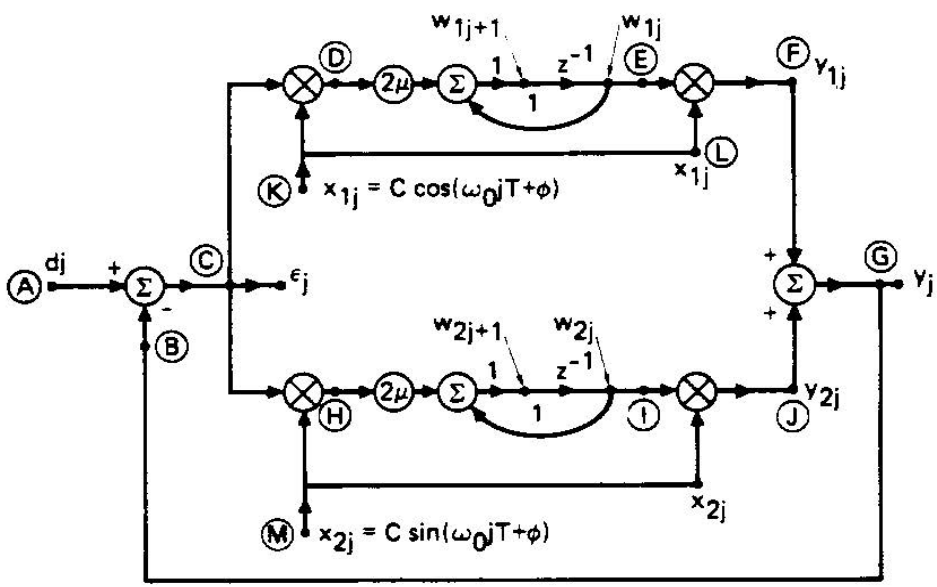

Fig. 7. Flow diagram showing signal propagation in single-frequency adaptive noise canceller.

Single Frequency Case

$$N_I \cos\omega_N t \; - \; N_Q \sin\omega_N t$$

$$(Y_I - N_I)^2 + (Y_Q - N_Q)^2$$

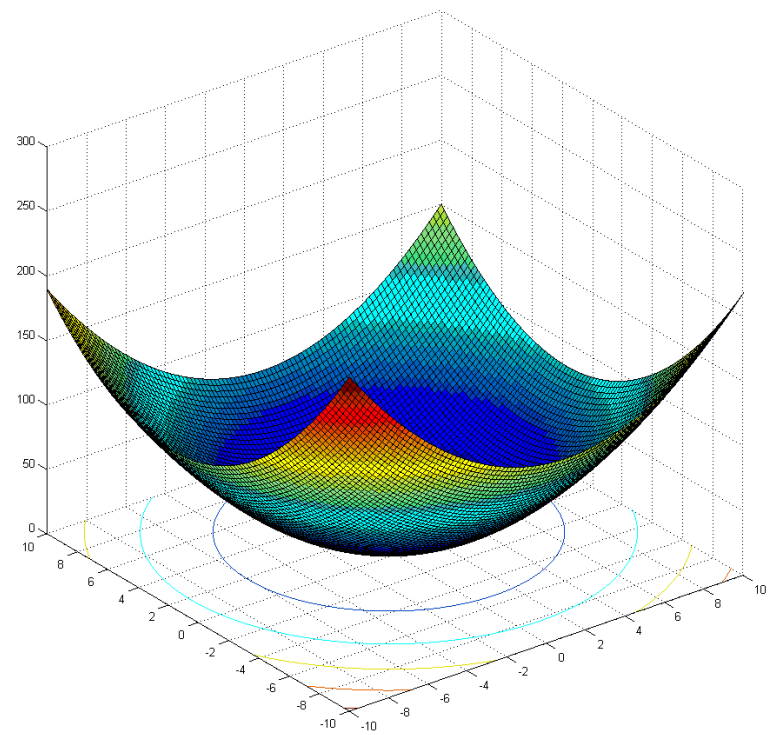

Storage Ring RF AM/PM Noise Suppression Concept

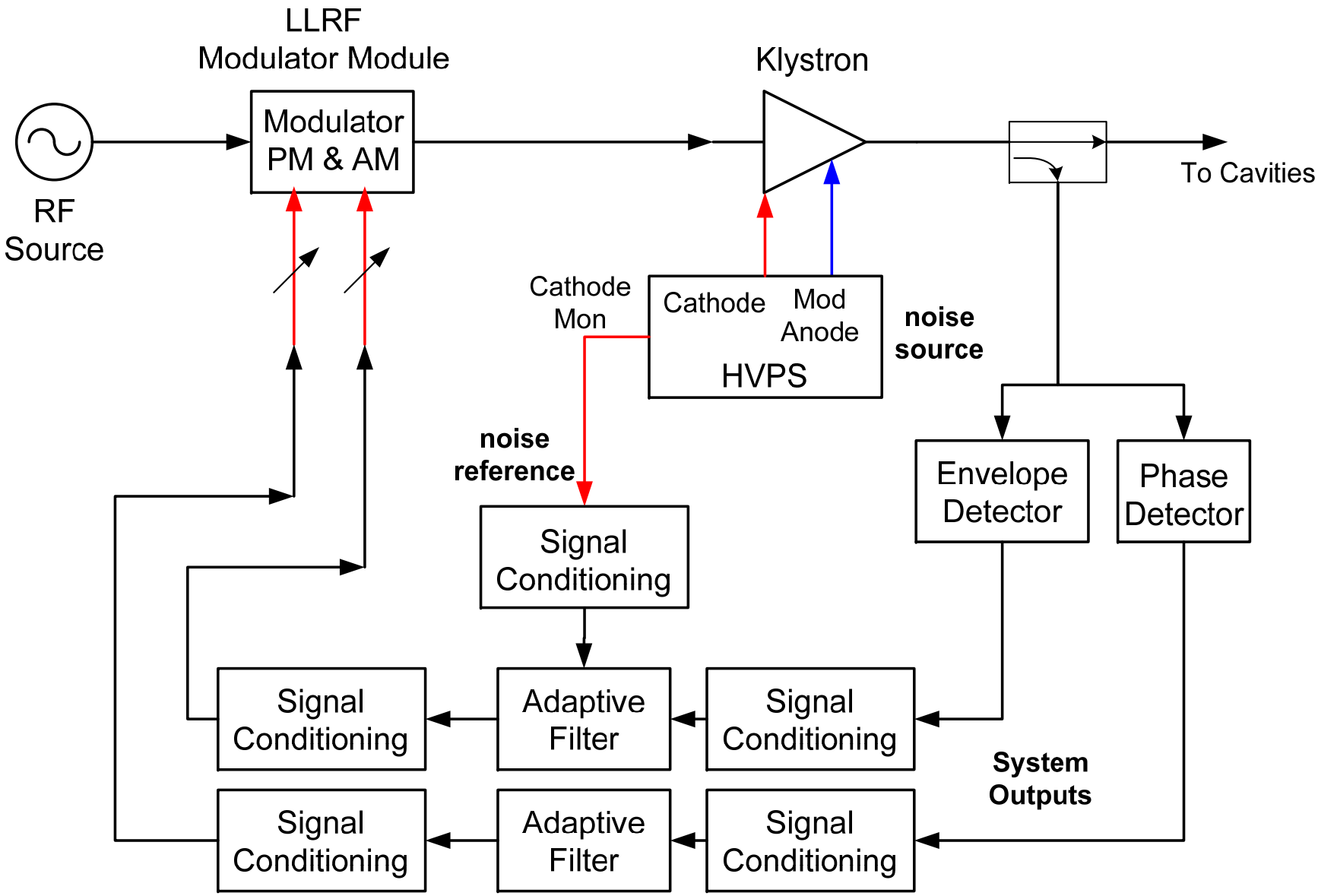

Adaptive Noise Cancellation – Demo at RF Test Stand

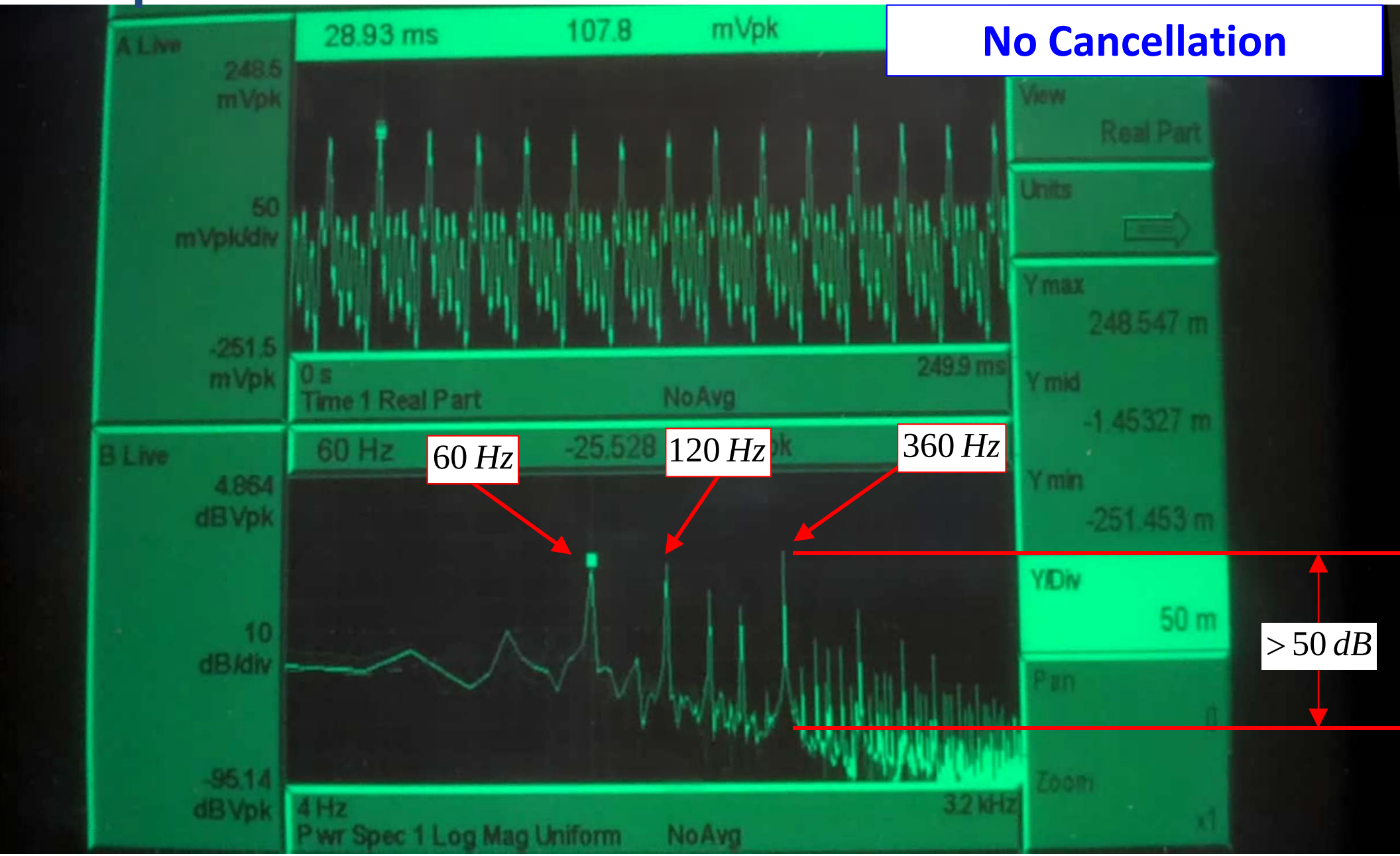

Adaptive Noise Cancellation – Demo at RF Test Stand

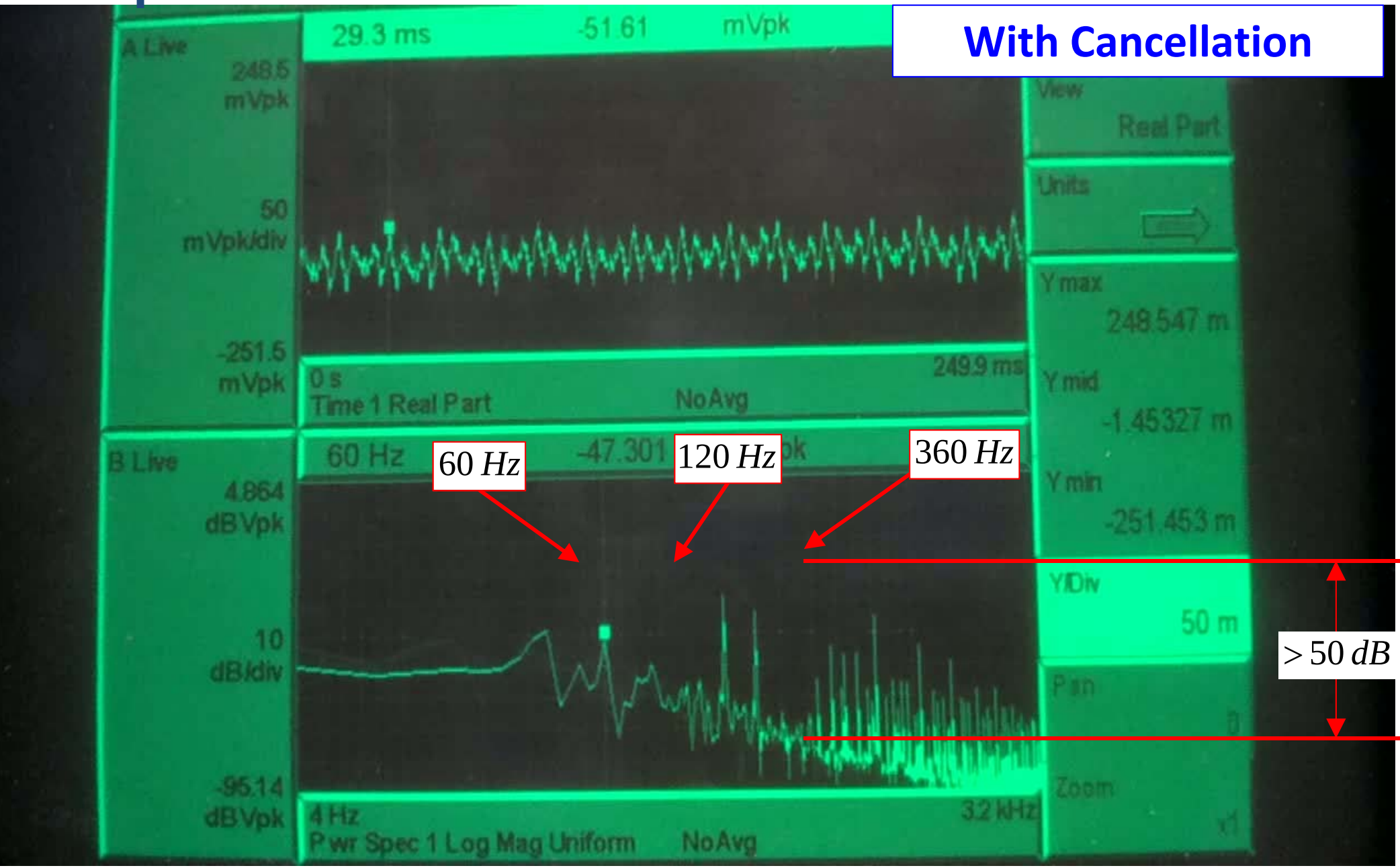

Towards Suppressing Multiple Harmonics

Feedback Comb Filter

$$H(z) = \frac{G}{1 - K z^{-M}}$$

Polyphase Channelizer [3]

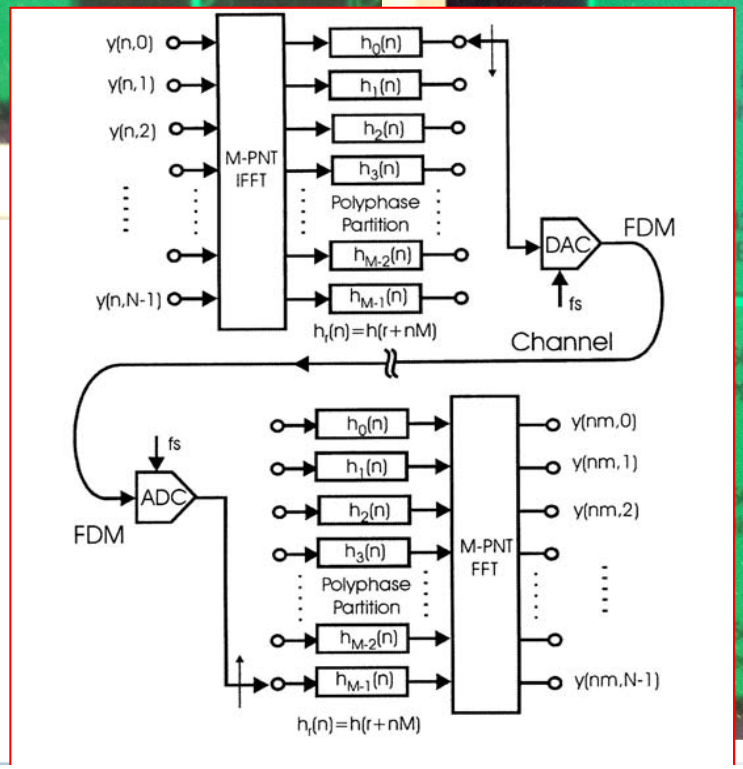

[3] Harris, et al, "Digital Receivers and Transmitters Using Polyphase Filter Banks…" IEEE Microwave Theory and Techniques, Vol.. 51, No. 4, April 2003