Feedback System - Introduction
Journal Club Presentation
March 25, 2008
Om Singh

Office of Science
U.S. DEPARTMENT OF ENERGY

BROOKHAVEN NATIONAL LABORATORY
BROOKHAVEN SCIENCE ASSOCIATES

Feedback System – Introduction

- Elementary Control System
- Error Feedback System – open & closed responses
- Plant Disturbances (Accelerator Orbit)
- Sensor (BPM) & Plant Actuator (Corrector) Model
- Controller (Regulator) Design Consideration
- Feedback Sampling Rate Effects
- NSLS & APS Global Orbit Fdbk Systems
- References

Elementary Control System

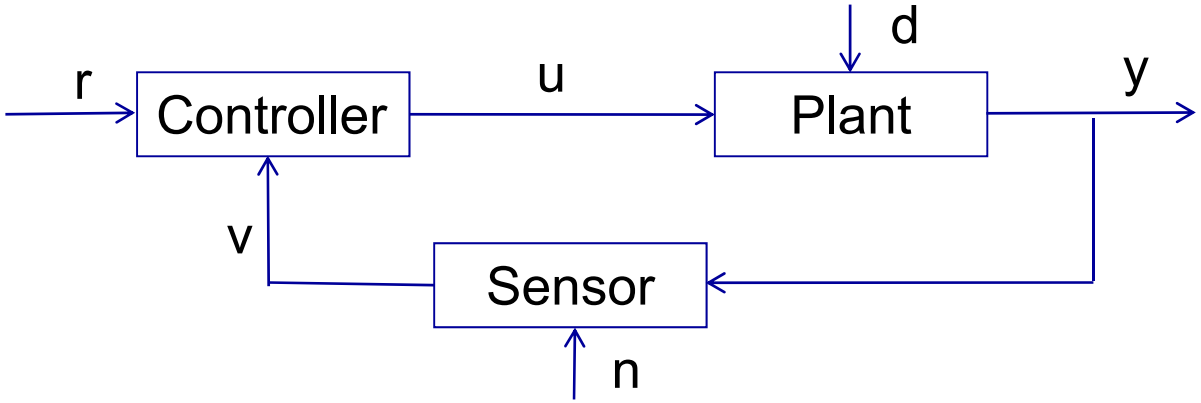

- Control system has three components-
  - Plant, Sensor, Controller
- There are 3 internal & 3 external signals
  - r - reference or command signal
  - v – sensor output
  - u – actuating signal, plant input
  - d – external disturbance
  - y – plant output
  - n – sensor noise

Performance Objectives

- *Ability of y to follow reference r*
- *Reduce effects of disturbance d*
- *Maintain stability*
- *Reduce effects of plant model uncertainty and variations*
- *Limit size of u – avoid saturation*

Basic (Error) Feedback Loop

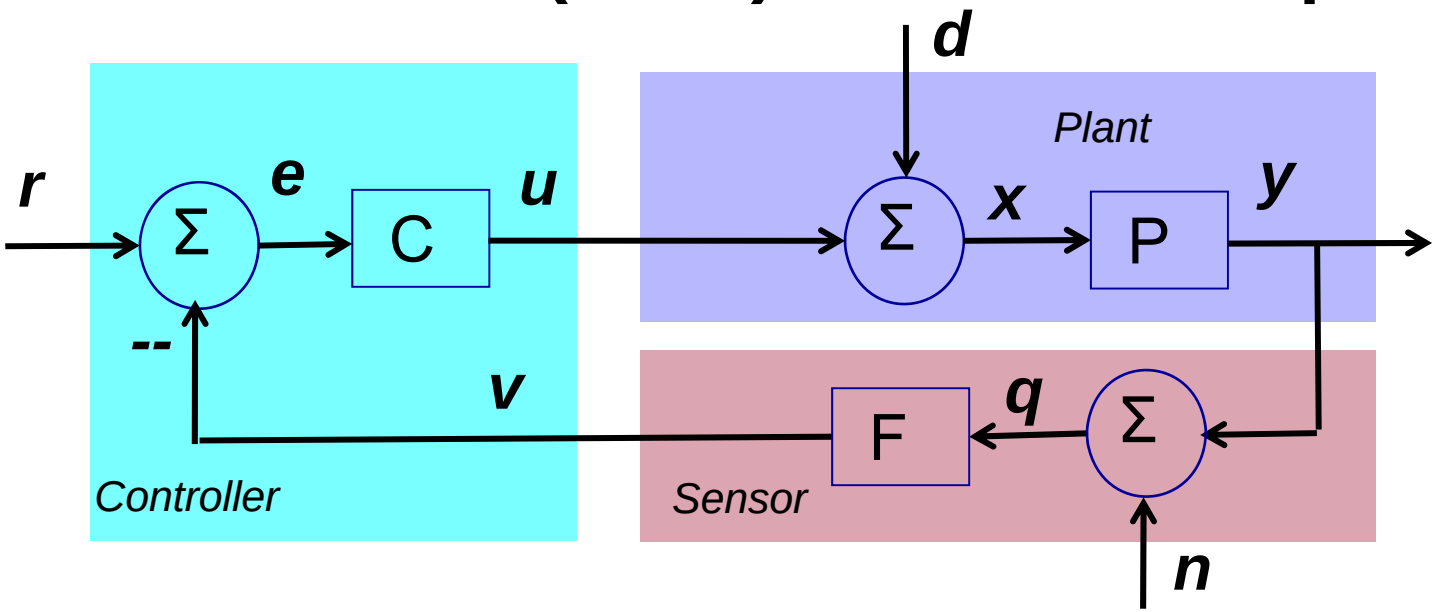

y= rCP –nFCP – yFCP + dP
y(1+FCP) = rCP + dP – nFCP

v= nF + dPF + rCPF – vCPF
v(1+FCP) = rFCP +dFP + nF

u= rC –nFC –dFPC –uFPC
u(1+FCP) = rC – dFPC - nFC

Note – 1) All summing junction inputs are positive unless noted
2) CP >> 1; F=1 @ low frequency

$$\begin{bmatrix} y \\ v \\ u \end{bmatrix} = \frac{1}{1+FCP}\begin{Bmatrix} CP & P & -FCP \\ FCP & FP & F \\ C & -FCP & -FC \end{Bmatrix}\begin{bmatrix} r \\ d \\ n \end{bmatrix}$$

Orbit (Error) Feedback Loop

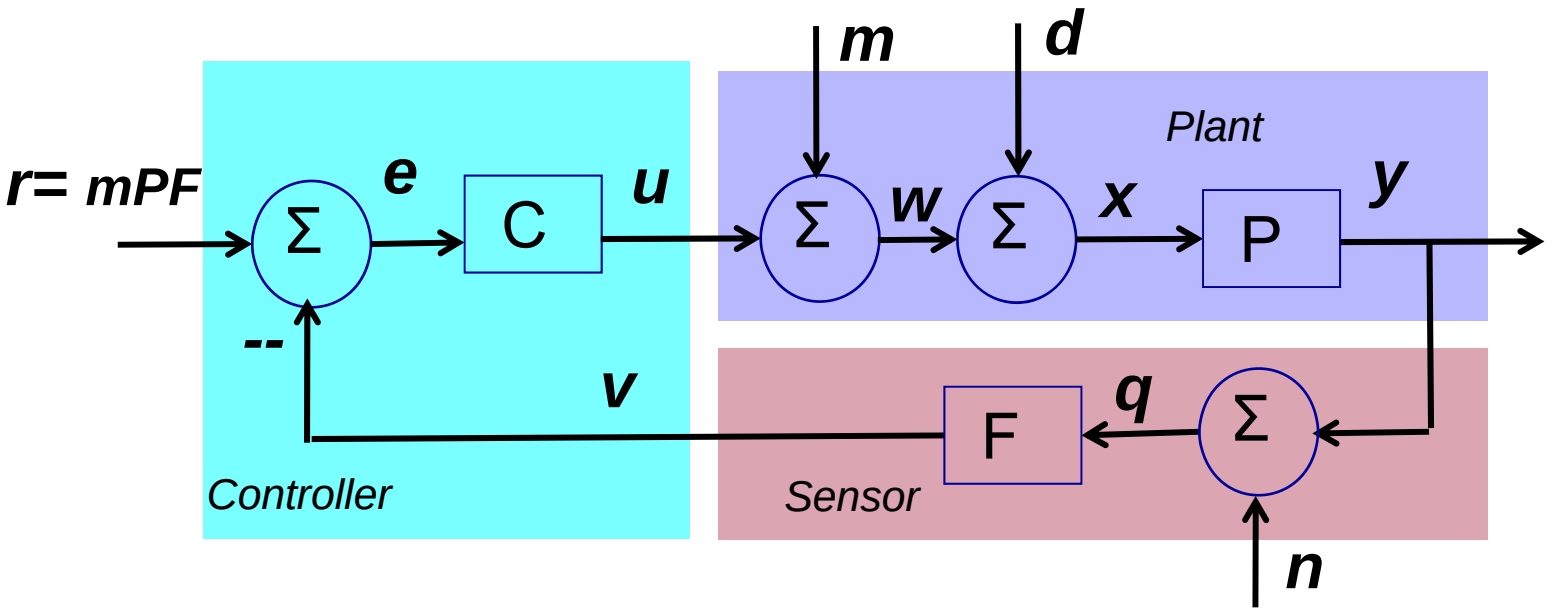

y(1+FCP) = (mPF)CP + (m+d)P – nFCP
y(1+FCP) = mP(1+FCP) + dP – nFCP

v(1+FCP) = (mPF)FCP +(m+d)FP + nF
v(1+FCP) = mPF(1+FCP) + dFP + nF

u(1+FCP) = mPFC – (m+d) FPC – nFC
u(1+FCP) = - dFPC - nFC

- Added m (dc) input to the plant
- With loop open (C=0), Adjust m to set y to reference orbit
- Set r=mPF

$$\begin{bmatrix} y \\ v \\ u \end{bmatrix} = \frac{1}{1+FCP}\begin{Bmatrix} P(1+FCP) & P & -FCP \\ PF(1+FCP) & FP & F \\ 0 & -FCP & -FC \end{Bmatrix}\begin{bmatrix} m \\ d \\ n \end{bmatrix}$$

Feedback open & closed Loop

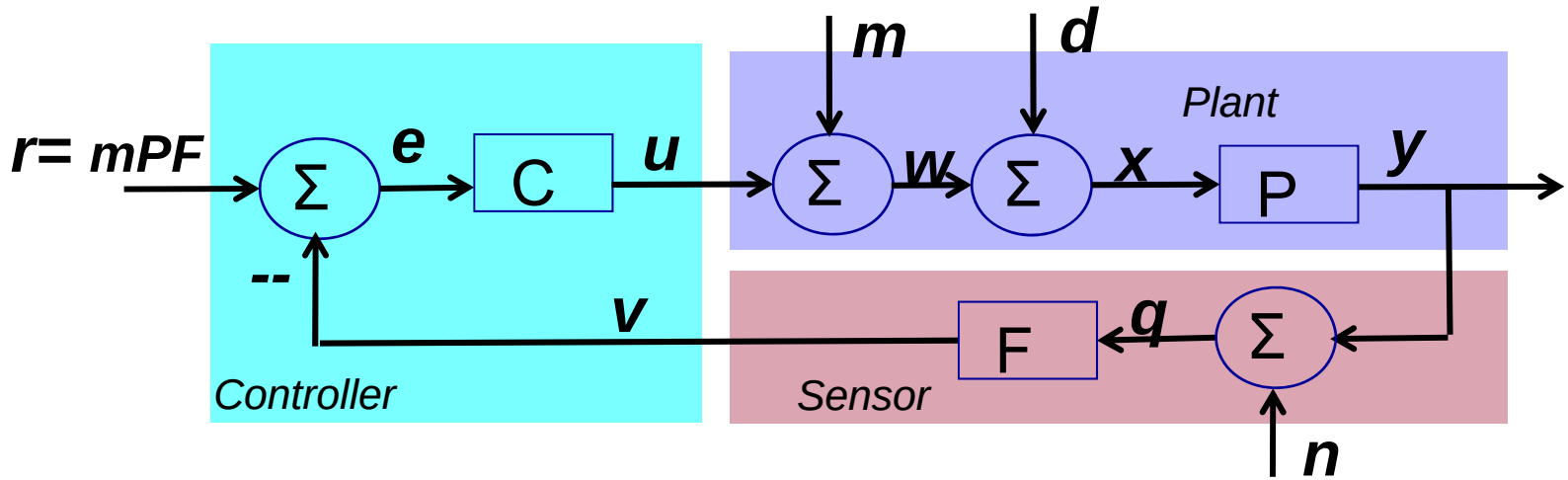

Open loop (C=0; F=1 @ low freq)

- y_{ol}=mP+dP
- v_{ol}=mP+dP+n

$$\begin{bmatrix} y \\ v \\ u \end{bmatrix} = \frac{1}{1+FCP} \begin{Bmatrix} P(1+FCP) & P & -FCP \\ PF(1+FCP) & FP & F \\ 0 & -FCP & -FC \end{Bmatrix} \begin{bmatrix} m \\ d \\ n \end{bmatrix}$$

Closed loop (F=1; CP>>1 at low freq)

- y_{cl}=mP + dP/(1+CP) – nCP/(1+CP) →
- v_{cl}=mP + dP/(1+CP) + n/(1+CP)

Y Closed Loop Output –

- Maintains reference orbit – mP
- Disturbance effect reduced by (1+CP)
- Sensor noise is transferred almost as is

→ Choose low noise sensor

Plant Disturbances – d

*Sources of Electron Beam Instability**

Long term (weeks-years)

→ground settlement → seasonal ground motion

Medium term (minutes-days)

→Diurnal temperature → Coupling changes
→Gravitational earth tides (sun/moon) → Crane motion
→Tunnel air temperature

Short term (milliseconds-seconds)

→Ground vibration → Traffic
→Cooling water vibration → Rotating machinery
→Booster ramping operations → Insertion device motion
→Power supplies

High frequency (sub-millisecond)

→High frequency PWM and pulsed power supplies
→Synchrotron oscillations → single and multibunch instabilities

* **Beam Stability at Light Sources R. Hettel SRI 2001, Madison WI Aug 22, 2001**

Plant Disturbances – d

Sources of Electron Beam Instability

Long term (weeks-years)

→ground settlement → seasonal ground motion

Medium term (minutes-days)

→Diurnal temperature → Coupling changes

→Gravitational earth tides (sun/moon) →crane motion

→Tunnel air temperature

Orbit feedback

RF freq feedback

Short term (milliseconds-seconds)

→Ground vibration → Traffic

→Cooling water vibration → Rotating machinery

→Booster ramping operations → Insertion device motion

→Power supplies

SQ Quad feedfback or feedforward

ID gap feedforward

High frequency (sub-millisecond)

Bunch to bunch fdbk

→High frequency PWM and pulsed power supplies

→Synchrotron oscillations → single and multibunch instabilities

Plant Disturbance & Reduction (APS)

Orbit Motion Power Spectra at ID Source Points

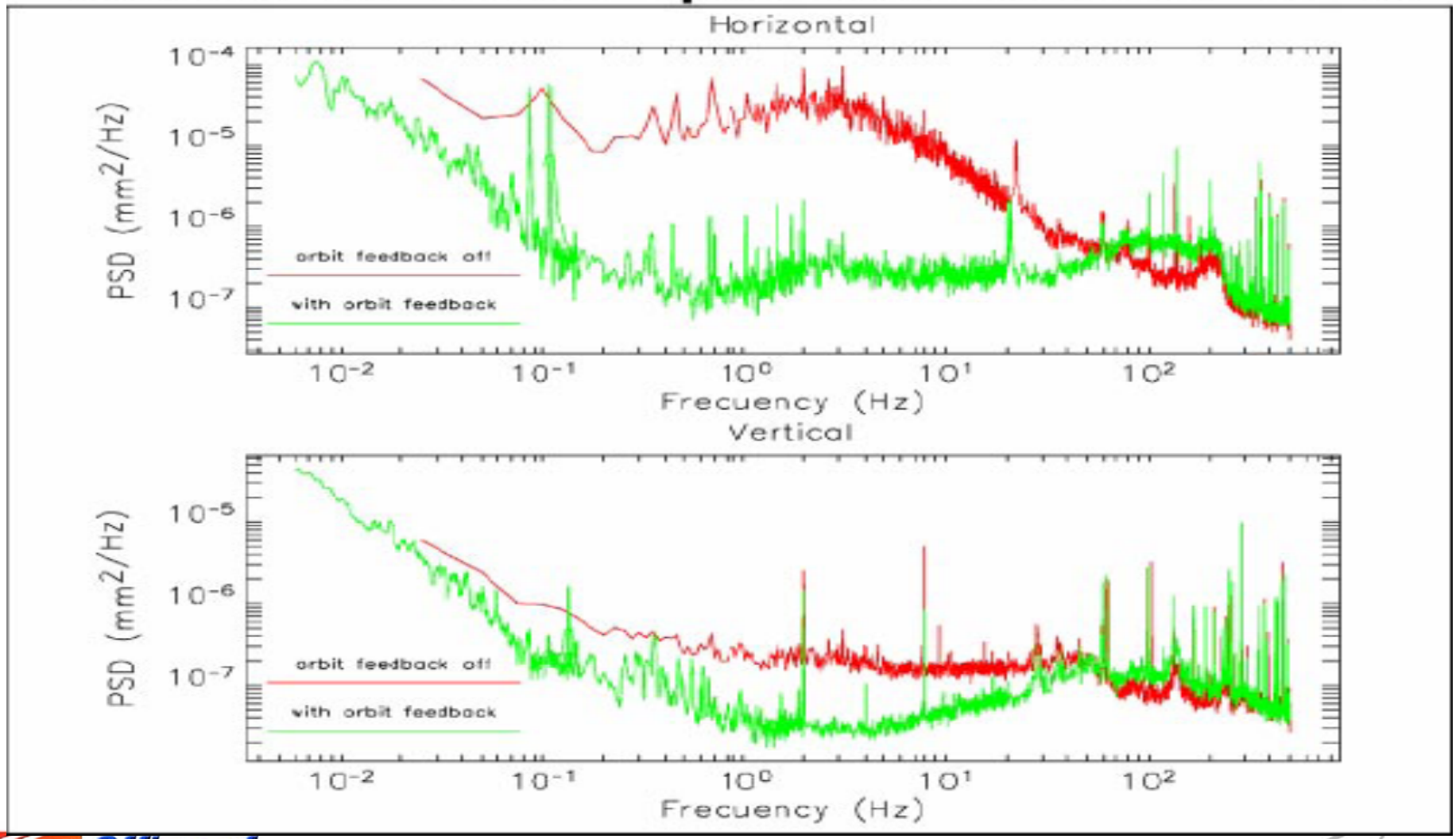

RF Beam Position Monitor Systematic effects & Noise (F)

- RF BPM Systematic Effects

✓Electronics thermal drift
✓Intensity dependence
✓Bunch pattern dependence
✓Mechanical thermal drift
✓Timing / trigger stability
✓TE10 mode in antechamber

- RF BPM Front-end AC Electronic Noise

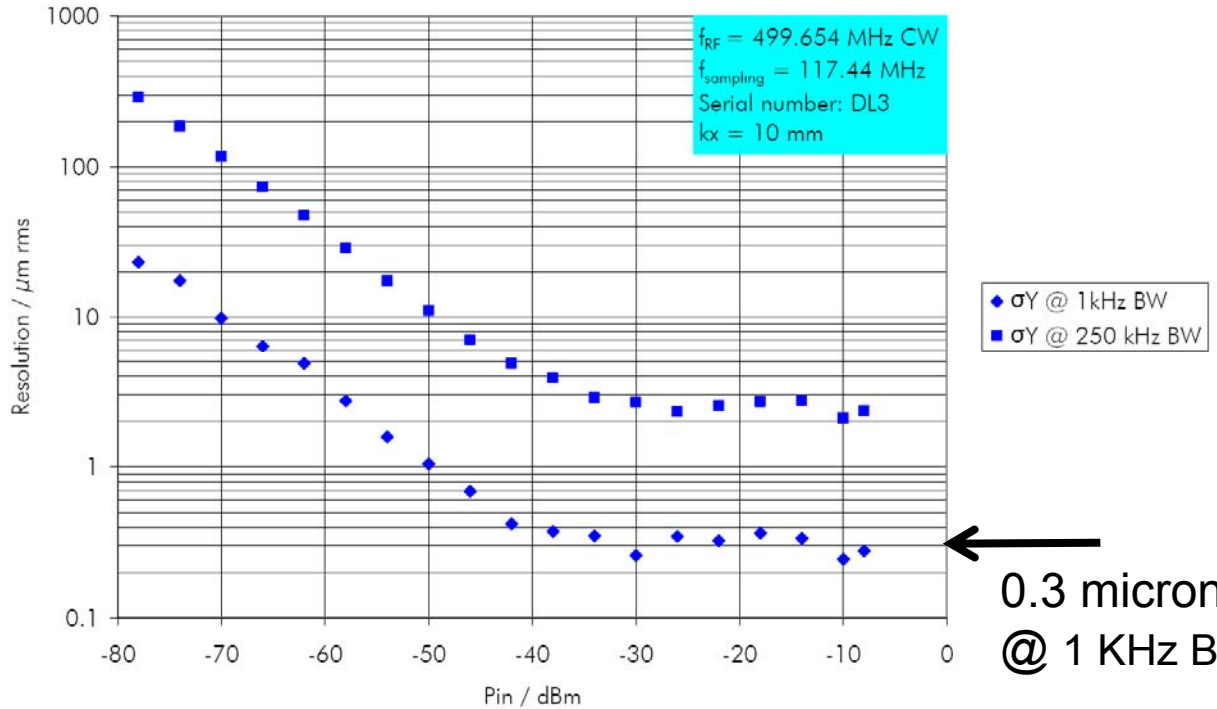

0.3 micron
@ 1 KHz BW

Office of Science
U.S. DEPARTMENT OF ENERGY
BROOKHAVEN NATIONAL LABORATORY
BROOKHAVEN SCIENCE ASSOCIATES

*NSLS-II SR RF Beam Position Monitor System – Performance Requirements**

Parameters/ Subsystems				Conditions	Standard Bpm System Requirement	
					Vertical	Horizontal
Single bunch, Single turn resolution (@ 378 kHz)				0.05 nC charge	500 µm rms	500 µm rms
				5.0 nC charge	20 µm rms	20 µm rms
Single bunch stored beam resolution (0.017-200 Hz BW)				0.02 mA current	10 µm rms	10 µm rms
				2.0 mA current	1 µm rms	1 µm rms
100 mA *** to 500 mA Stored beam resolution – 20% to 100 % duty cycle	Bpm Receiver Electronics	Assuming no contribution from bunch/ fill pattern effects		**0.017 Hz to 200 Hz	0.2 µm rms	0.3 µm rms
				200 Hz to 2000 Hz	0.4 µm rms	0.6 µm rms
				**1 min to 8 hr drift	0.2 µm pk-pk	0.5 µm pk-pk
		Bunch charge/ fill pattern effects only		DC to 2000 Hz	0.2 µm rms	0.3 µm rms
	Mechanical motion limit at Pick-up electrodes assembly (ground & support combined)		Vibrations	50 Hz to 2000 Hz	10 nm rms	10 nm rms
				4 Hz to 50 Hz	25 nm rms	25 nm rms
				0.5 Hz to 4 Hz	200 nm rms	200 nm rms
			Thermal	**1 min to 8 hr	200 nm pk-pk	500 nm pk-pk

* Requirement values are preliminary - work in progress

** User bpm system resolution values will be smaller (factor of ~ 0.5)

*** @ 5 mA – 50 mA stored beam, bpm receiver resolution values will be worse (factor of ~2)

Orbit Feedback Loop Stability

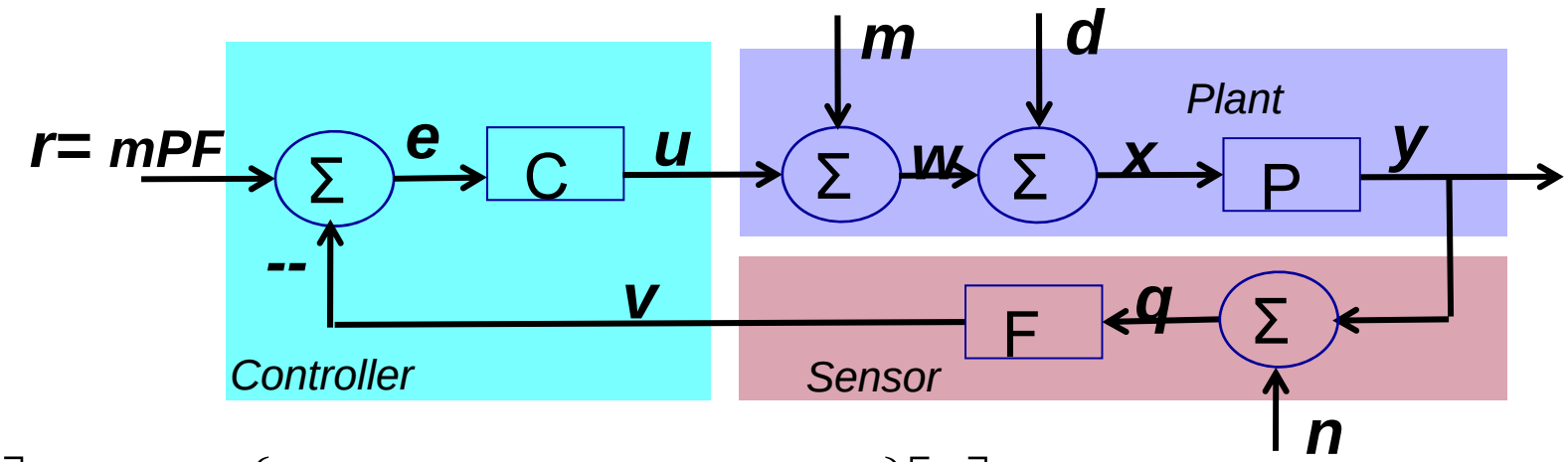

$$\begin{bmatrix} y \\ v \\ u \end{bmatrix} = \frac{1}{1+FCP} \begin{Bmatrix} P(1+FCP) & P & -FCP \\ PF(1+FCP) & FP & F \\ 0 & -FCP & -FC \end{Bmatrix} \begin{bmatrix} m \\ d \\ n \end{bmatrix}$$

- Disturbance is reduced by a factor of [1/(1+FCP)]; FCP >>1 at low frequency
- FCP is called open loop transfer function
- Examining Bode plot of open loop transfer can provide closed loop stability margins – gain & phase margins
- Gain and phase margins are important measures of stability robustness

Phase & Gain Margins

The gain margin is the difference between the magnitude curve and 0dB at the point corresponding to the frequency that gives us a phase of -180 deg (the phase cross over frequency, Wpc).

The phase margin is the difference in phase between the phase curve and -180 deg at the point corresponding to the frequency that gives us a gain of 0dB (the gain cross over frequency, Wgc).

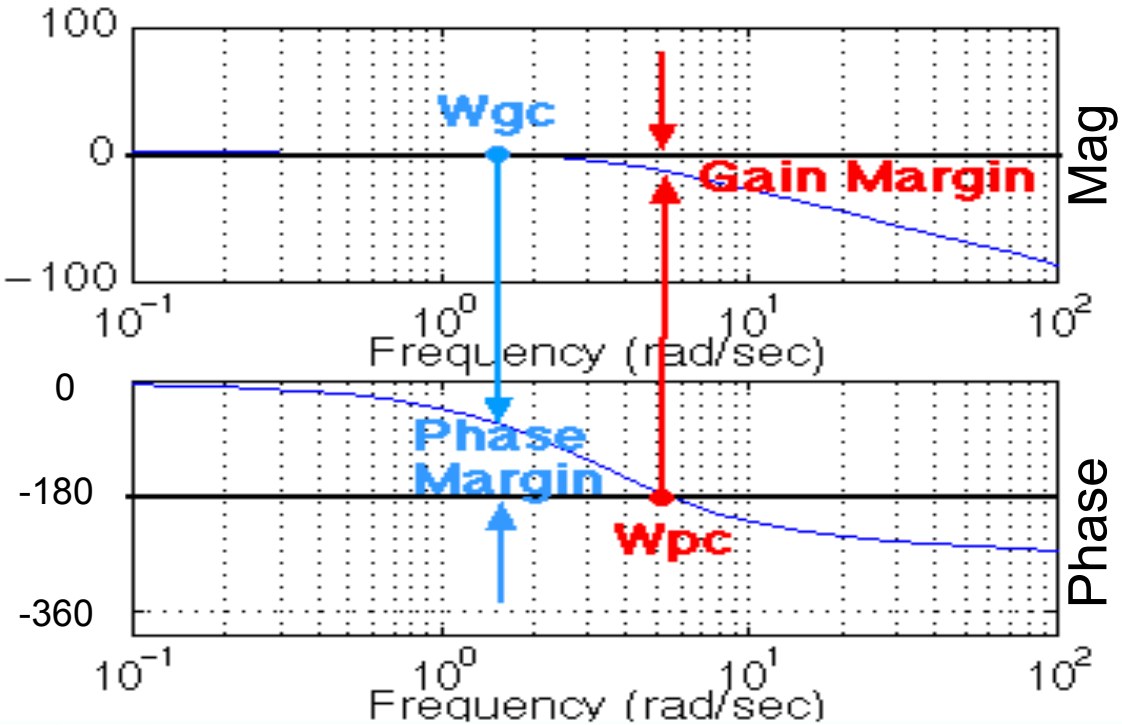

Stability Robustness Requires

Gain Margin → -8 to -12 db

Phase margin → 45° to 60°

Corrector & Chamber Response (P) – Soleil

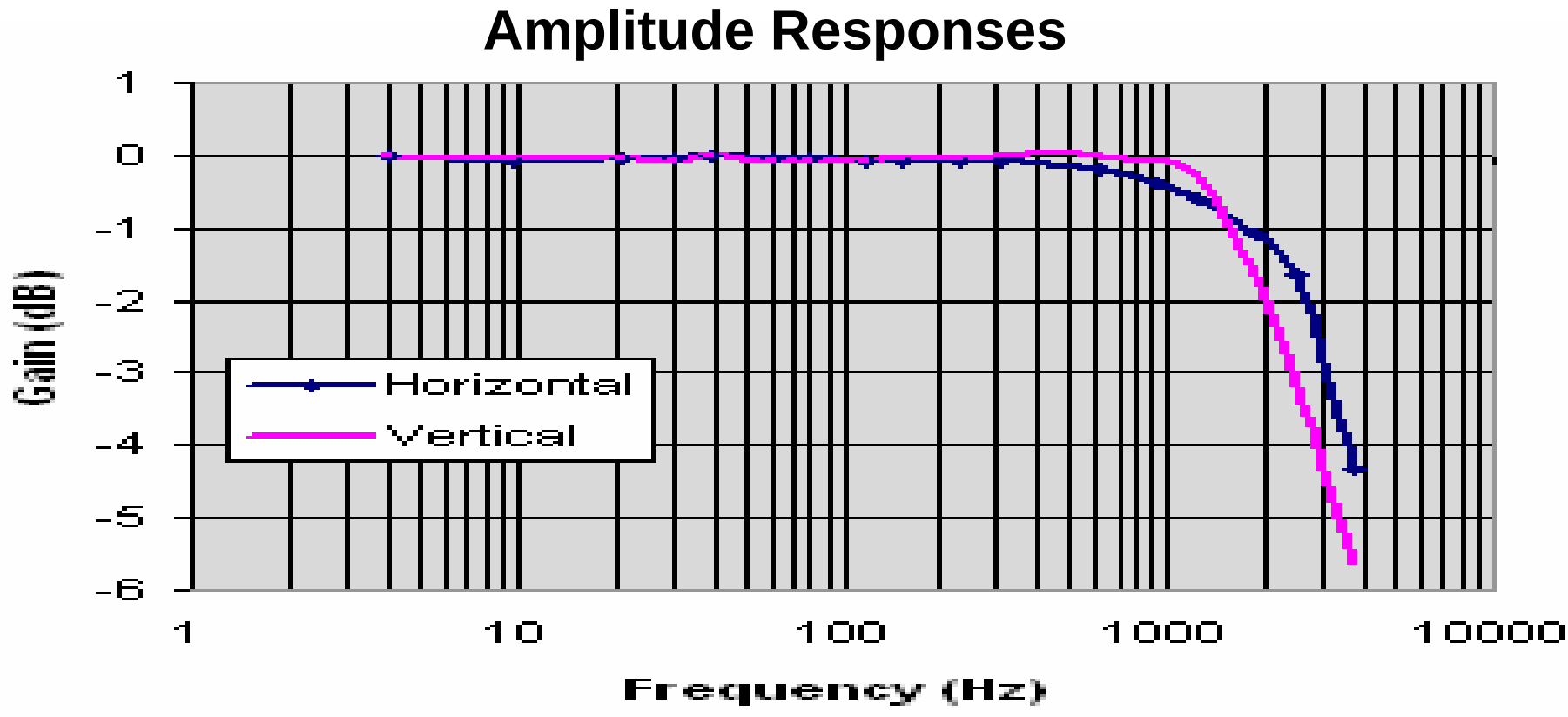

First Order Estimates (phase data not available) --

Horizontal - ~ 1 pole low pass filter @ 3.0 KHz
Vertical - ~ 1 pole low pass filter @ 2.5 KHz

BPM (F) & Corrector System (P) Responses- APS

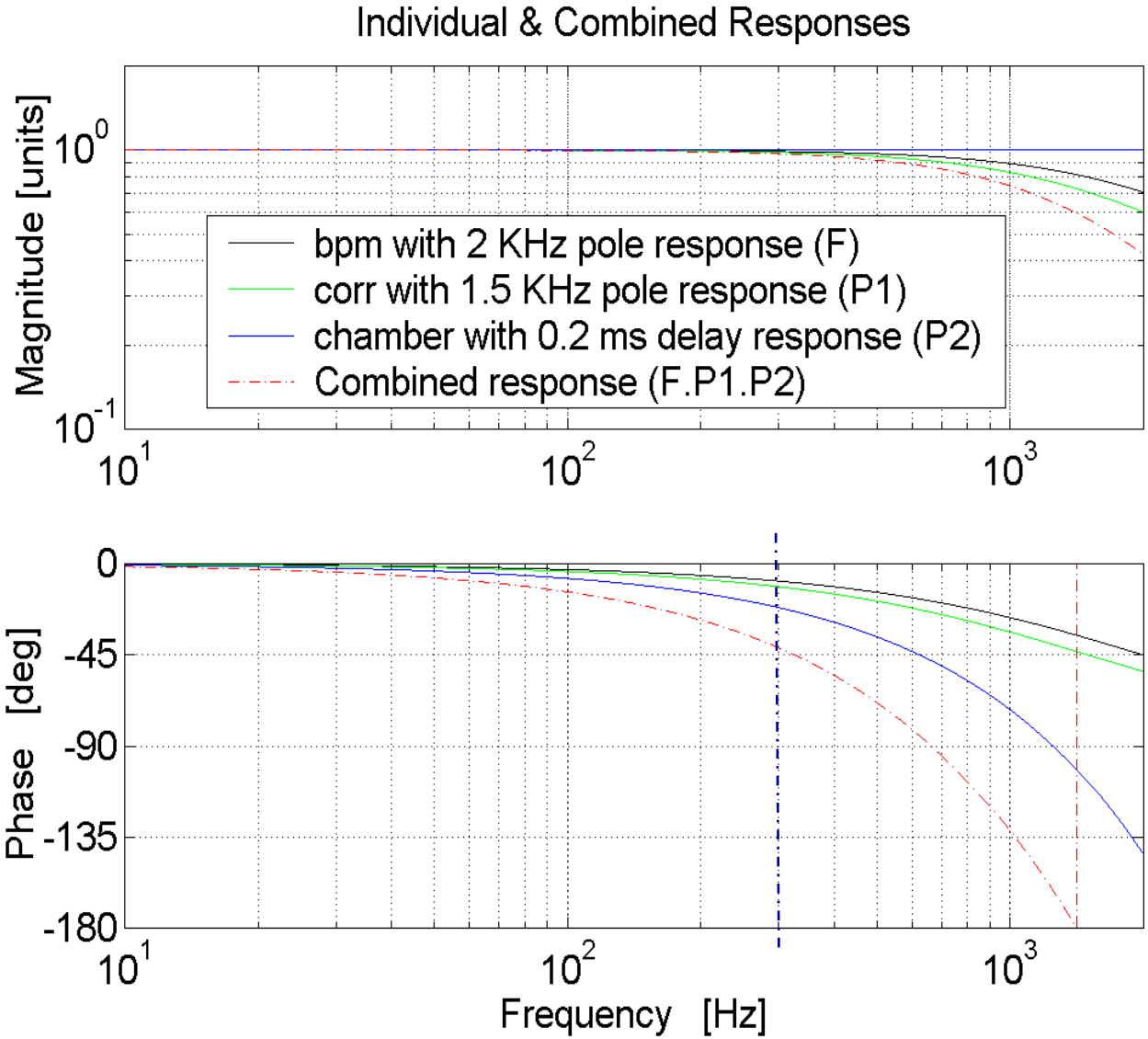

$$F(jw) = \frac{1}{\{1 + j(w/w_f)\}}$$

$$P1(jw) = \frac{1}{\{1 + j(w/w_p)}$$

$$P2(jw) = e^{-jw\tau}$$

Phases at 300 Hz

F(Φ) = 8.5°

P1(Φ) = 11.3°

P2(Φ) = 22.0°

F.P1.P2(Φ) = 41.8°

A Simple Regulator Design & Overall Loop Response

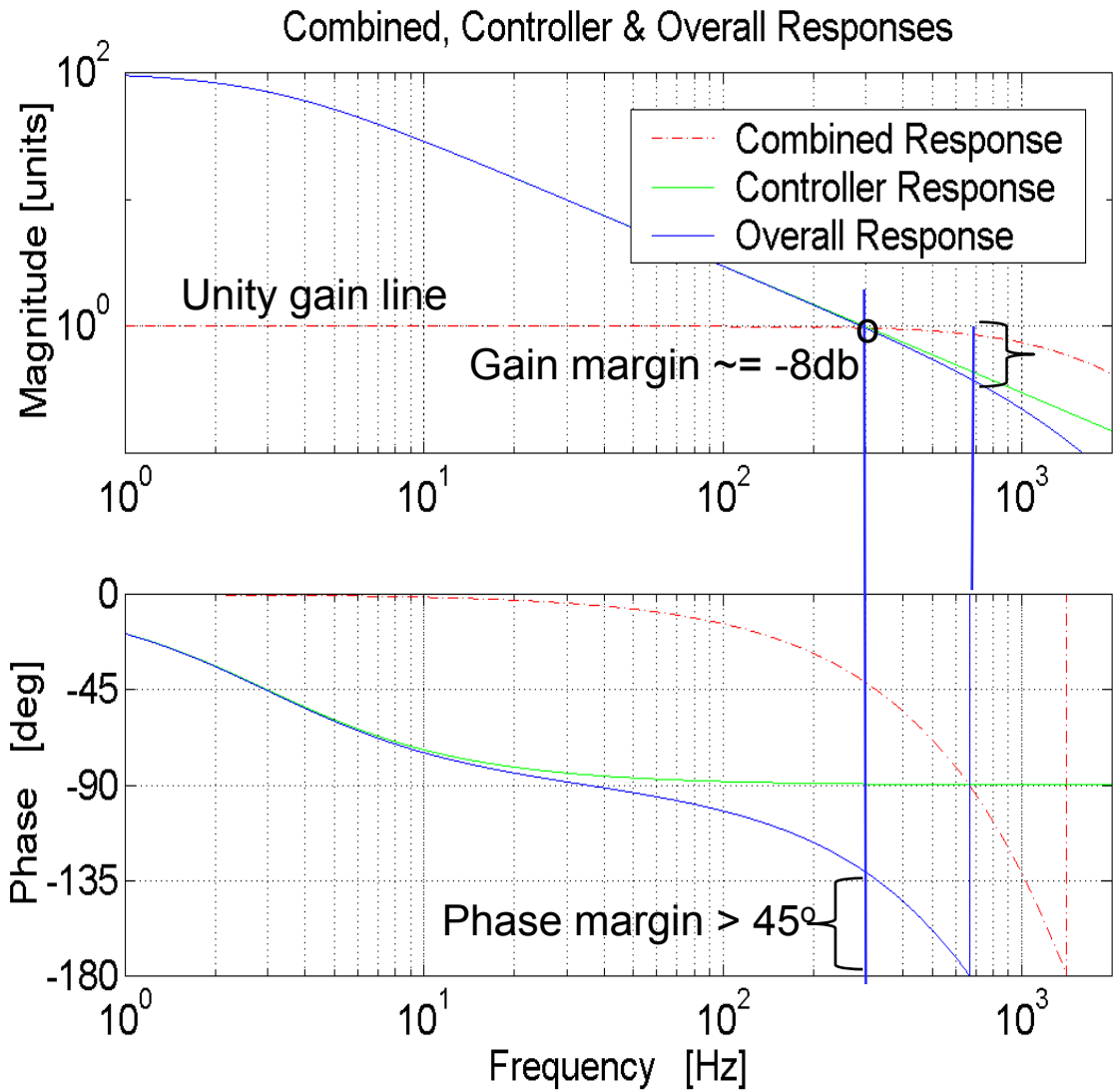

Design a regulator –
1 pole @ 3 Hz
Gain=100

$$C(jw) = \frac{100}{\{1 + j(w/w_c)\}}$$

Overall Xfer Function
= F.P1.P2.C

Feedback performance –

$$S = \frac{1}{(1 + F.P1.P2.C)}$$

- Reduction of noise up to ~ 99 from dc to 3 Hz
- Reduction level degrades → 20 db/decade in freq
- No reduction at =>300 Hz

- Gain Margin= -8 db
- Phase margin = 45°

* Analog feedback or digital feedback with s.r > 100 kHz

Office of Science
U.S. DEPARTMENT OF ENERGY
BROOKHAVEN NATIONAL LABORATORY
BROOKHAVEN SCIENCE ASSOCIATES

Performance Impact of Sampling Rate – 100kHz, 10 kHz, 5 kHz

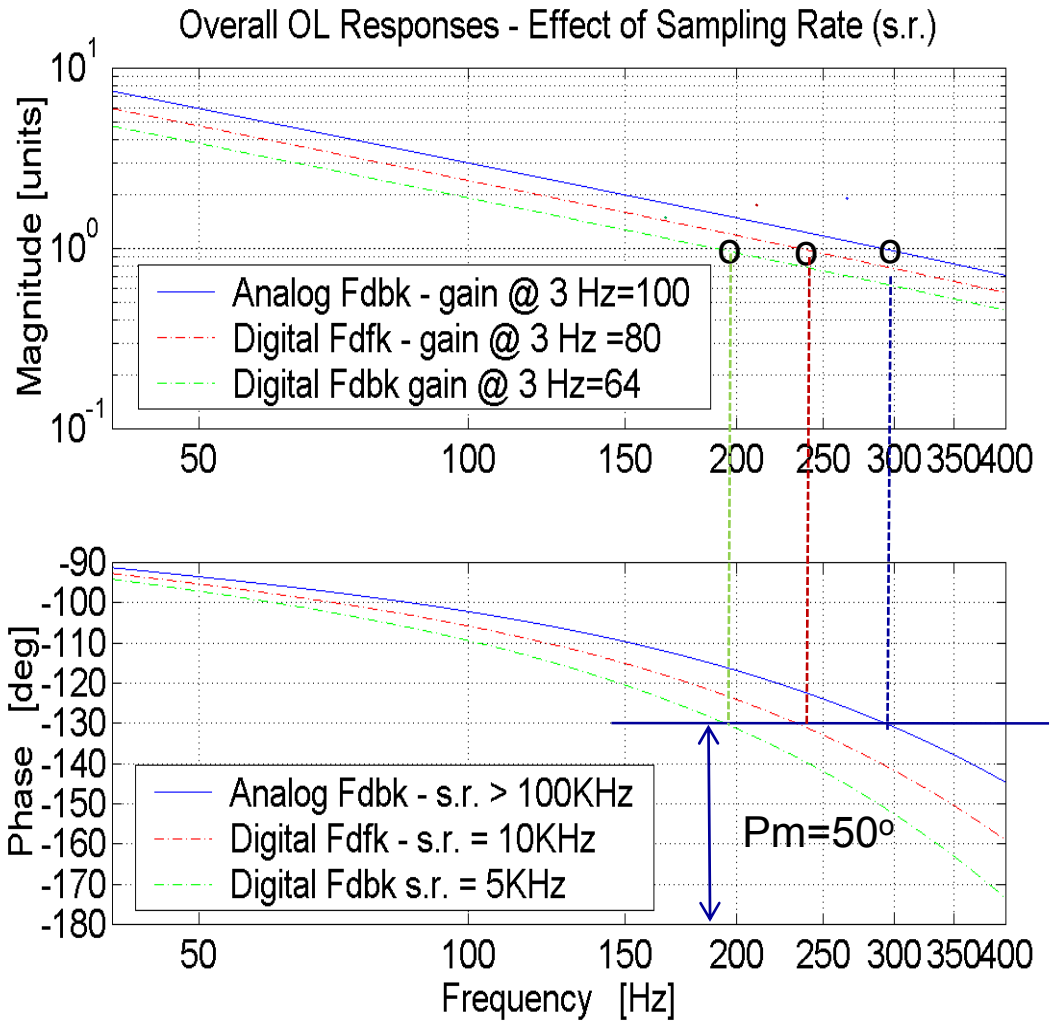

Estimating 1st order digitization by introducing a delay

$$Let \rightarrow \tau = 0.1ms$$

$$OL_{(fdbk\,@\,10kHz)} =$$

$$(0.8)OL_{(fdbk\,@\,100kHz)}e^{-jw\tau}$$

$$OL_{(fdbk\,@\,5kHz)} =$$

$$(0.8)OL_{(fdbk\,@\,10kHz)}e^{-jw\tau}$$

s.r. Effects => 5 kHz → 10 kHz

→Increase in disturbance reduction by ~ 25% in freq band of 3-300 Hz

→ Increase in correction BW by >20%

NSLS – Harmonic Analog Global Fdbk

HARMONIC GLOBAL FEEDBACK FOR X RAY VERTICAL PLANE

* 8 BPMs are used to provide orbit information. This orbit is subtracted from a reference orbit, which is the orbit that is measured at the top of each fill after computer-controlled global and local orbit correction have been made to steer beamline.

* The difference orbit go to the linear analog ~~6x8~~ 8x6 matrix network, F that approximately calculates the sine and cosine components of each of the three harmonics.

* The harmonic outputs then go to servo amplifiers with high gain (30 to 40 db at 1 hz) with proper phase response. These outputs then drive another analog 6x16 matrix network, T that synthesizes the corrector signals based on the six harmonic component inputs.

* The T output go to the summing amplifier of the trim power supplies. The other two inputs to the summing amplifier are from local feedback correction and from dc correction done by computer before the feedback is closed.

* The harmonic test input is used to measure open loop response matrix, during the test phase.

NSLS – Harmonic Analog Global Fdbk

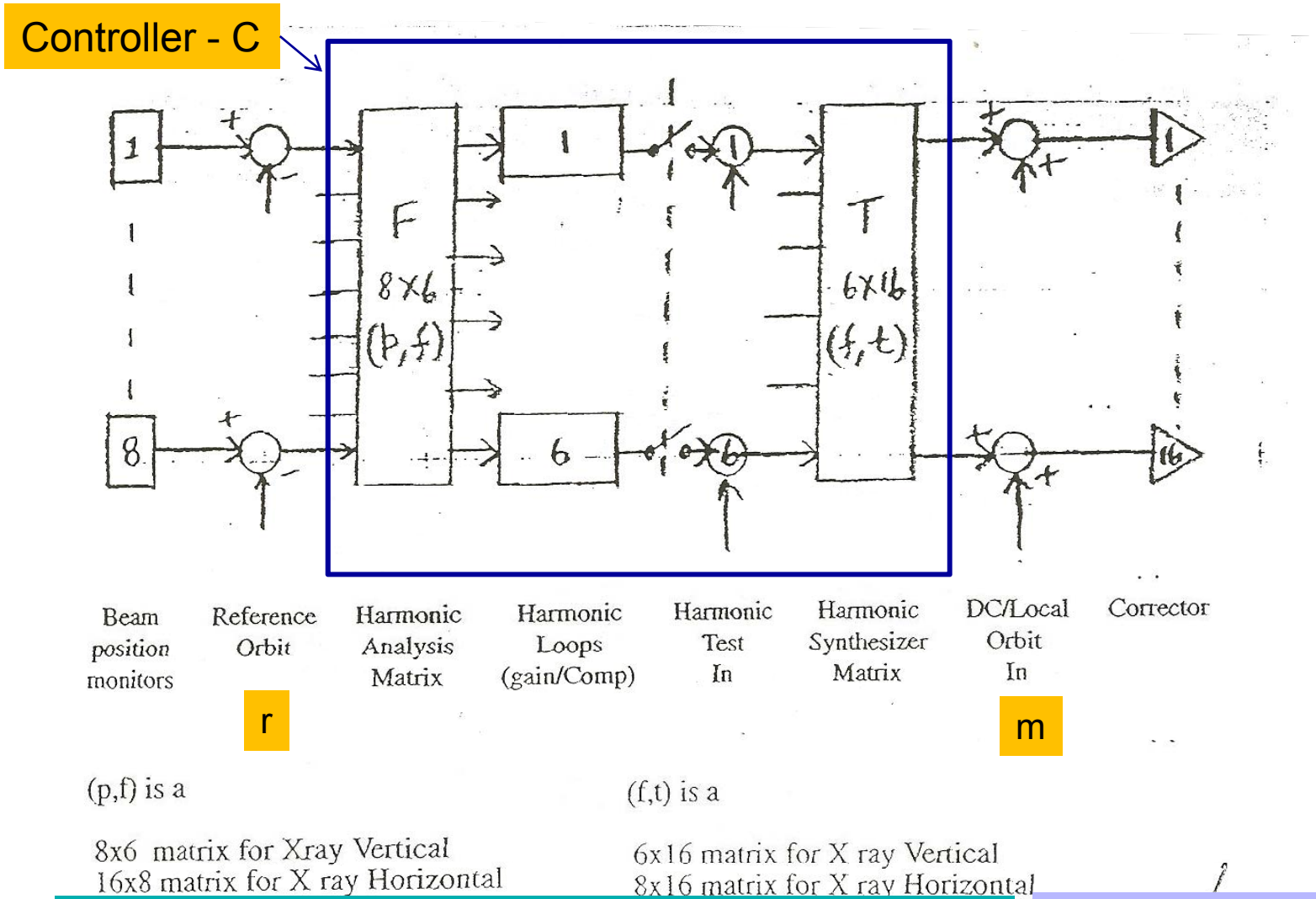

(p,f) is a

8x6 matrix for Xray Vertical
16x8 matrix for X ray Horizontal

(f,t) is a

6x16 matrix for X ray Vertical
8x16 matrix for X ray Horizontal

TF -X-ray ring vertical : ([15 40], [1.5 4 400], 300) ;
TF -X-ray ring horizontal : ([22.5], [0.04], 170).

- Digital Feedback s.r = 5 kHz
- Inverse matrix conversion

Office of Science
U.S. DEPARTMENT OF ENERGY
BROOKHAVEN NATIONAL LABORATORY
BROOKHAVEN SCIENCE ASSOCIATES

APS AC (RTFB) Global Fdbk

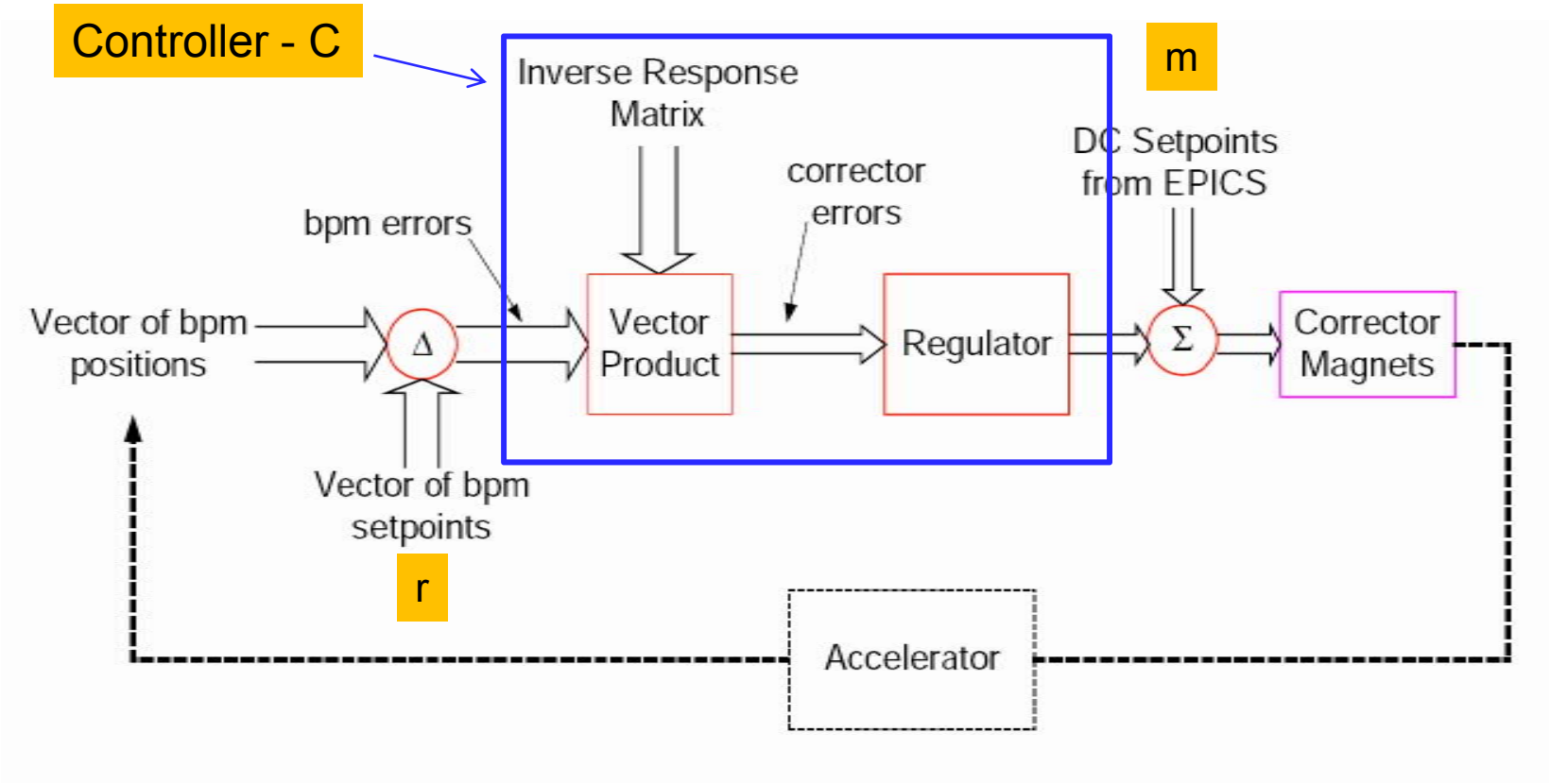

Office of Science
U.S. DEPARTMENT OF ENERGY
BROOKHAVEN NATIONAL LABORATORY
BROOKHAVEN SCIENCE ASSOCIATES

Optimized Overall Open Loop Responses (Vert) – 1.5 KHz vs 15 KHz

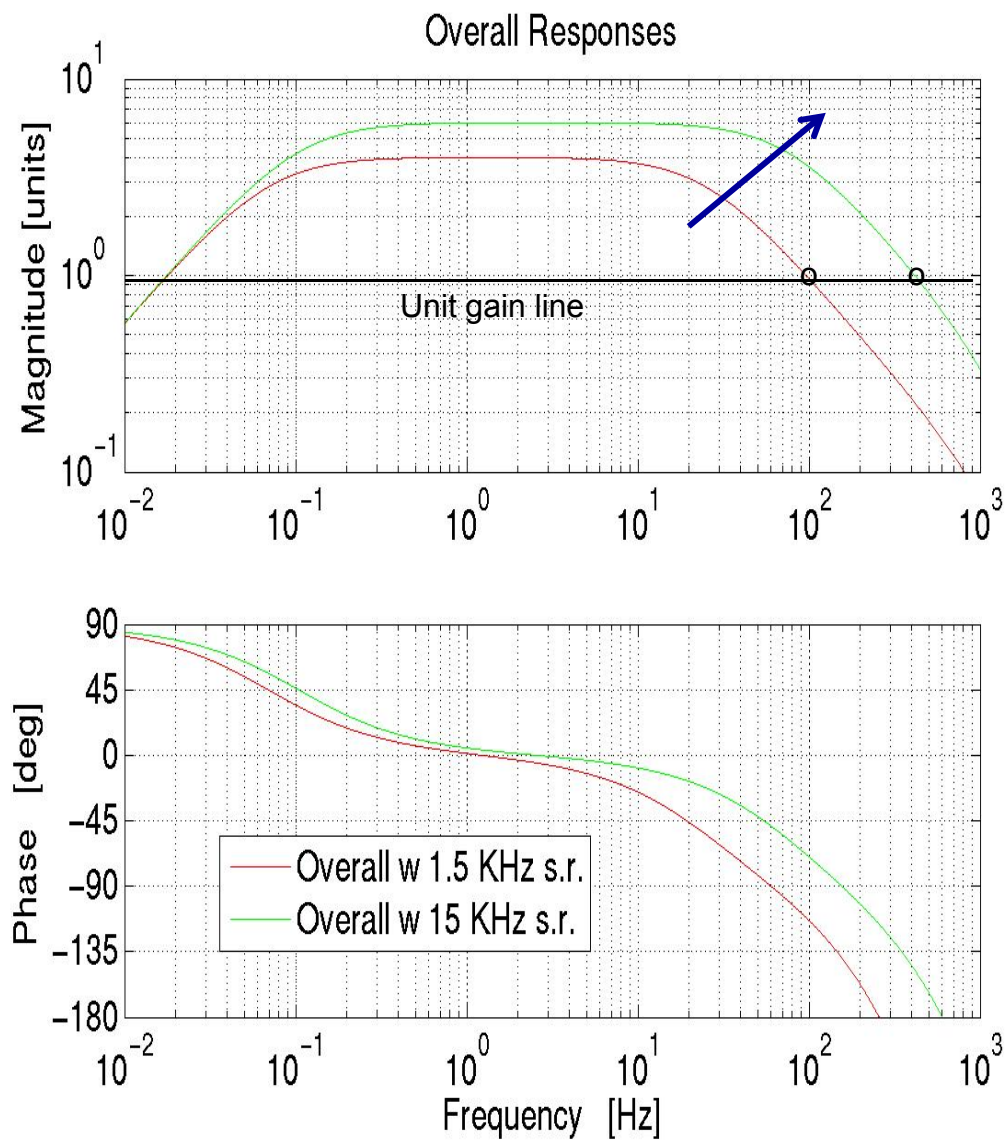

Optimized parameters @ 1.5 KHz s.r.

Digital Process Rate = 1.5 KHz
- Digitization Phase = (f/fs) * (360deg)

Regulator
- 1 HPF @ 0.07 Hz
- 1 LPF @ 25 Hz
- Gain = 4

Orbit Correction Bandwidth
- 100 Hz

Optimized Parameters @ 15 KHz s.r.

Digital Process Rate = 15.0 KHz
- Digitization Phase= (f/fs) * (360deg)

Regulator
- 1 HPF @ 0.105 Hz
- 1 LPF @ 75 Hz
- Gain = 6

Orbit Correction Bandwidth
- 400 Hz

References

1) Astrom - Control System Design

http://www.cds.caltech.edu/~murray/courses/cds101/fa02/caltech/astrom.html

2) Astrom & Murray - Analysis and design of feedback system

http://www.cds.caltech.edu/~murray/courses/cds101/fa03/caltech/am03.html

3) Doyle, Francis & annenbaum - Feedback Control Theory

http://www.cds.caltech.edu/~macmardg/cds110b/dft.html

4) Presenter (& many others) work on orbit feedback at NSLS & APS