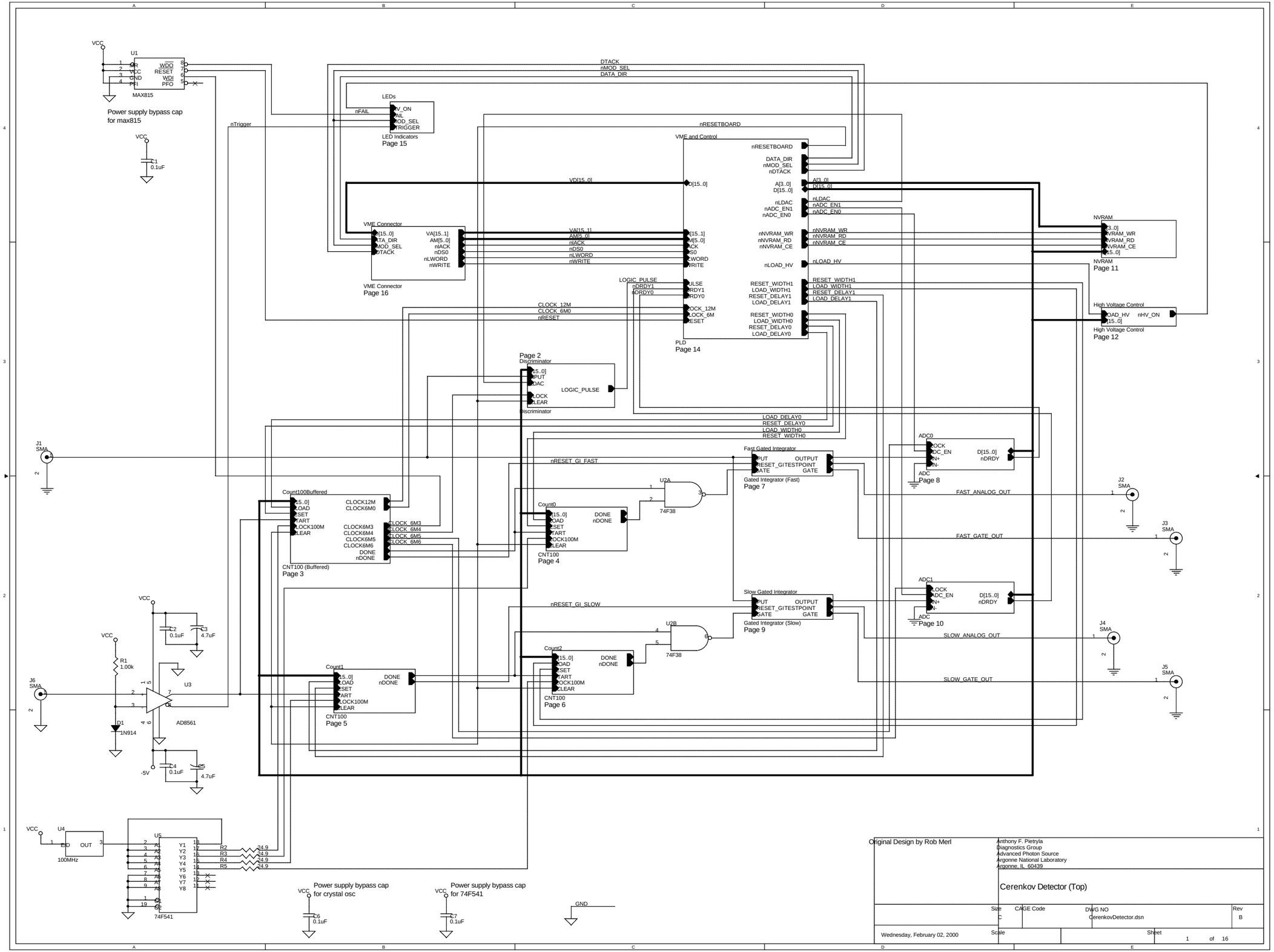
U1
MAX815
Power supply bypass cap for max815
LEDs
LED Indicators
Page 15
VME and Control
PLD
Page 14
VME Connector
Page 16
NVRAM
Page 11
High Voltage Control
Page 12
Page 2
Discriminator
Fast Gated Integrator
Gated Integrator (Fast)
Page 7
ADC
Page 8
Count100Buffered
CNT100 (Buffered)
Page 3
Count0
CNT100
Page 4
Slow Gated Integrator
Gated Integrator (Slow)
Page 9
Page 10
Count1
CNT100
Page 5
Count2
Page 6
74F38
AD8561
74F541
100MHz
Power supply bypass cap for crystal osc
Power supply bypass cap for 74F541
Original Design by Rob Merl
Anthony F. Pietryla
Diagnostics Group
Advanced Photon Source
Argonne National Laboratory
Argonne, IL 60439
Cerenkov Detector (Top)
Size C
CAGE Code
DWG NO CerenkovDetector.dsn
Rev B
Wednesday, February 02, 2000
Scale
Sheet 1 of 16

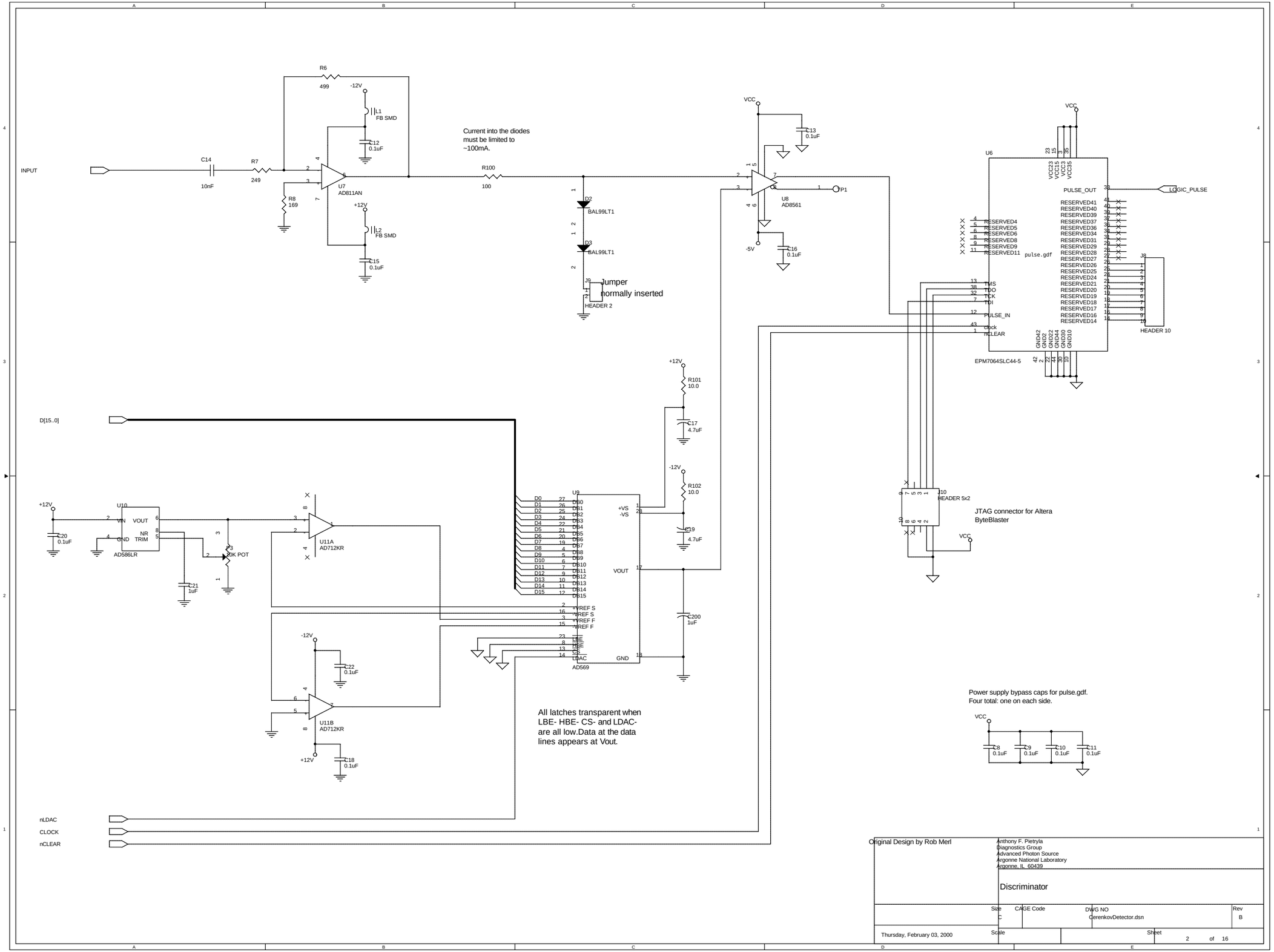

Original Design by Rob Merl

Anthony F. Pietryla
Diagnostics Group
Advanced Photon Source
Argonne National Laboratory
Argonne, IL 60439

Discriminator

Size	CAGE Code	DWG NO	Rev
C		CerenkovDetector.dsn	B

Thursday, February 03, 2000

Scale

Sheet 2 of 16

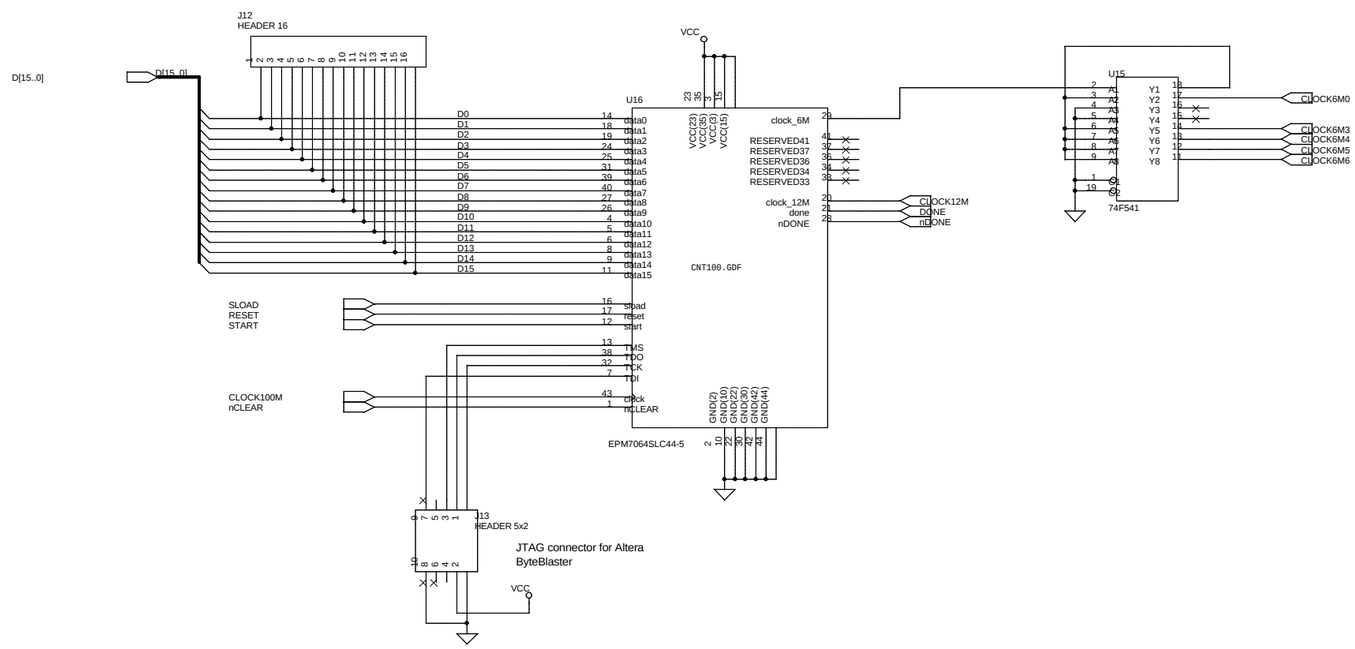

Power supply bypass caps for cnt100.gdf.
Four total: one on each side.

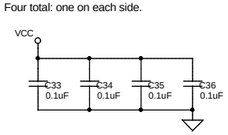

Power supply bypass caps for
74F541.

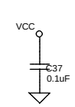

Original Design by Rob Merl

Anthony F. Pietryla
Diagnostics Group
Advanced Photon Source
Argonne National Laboratory
Argonne, IL 60439

100MHz Counter (Buffered)

Size	CAGE Code	DWG NO	Rev
C		CerenkovDetector.dsn	B

Wednesday, February 02, 2000

Scale

Sheet 3 of 16

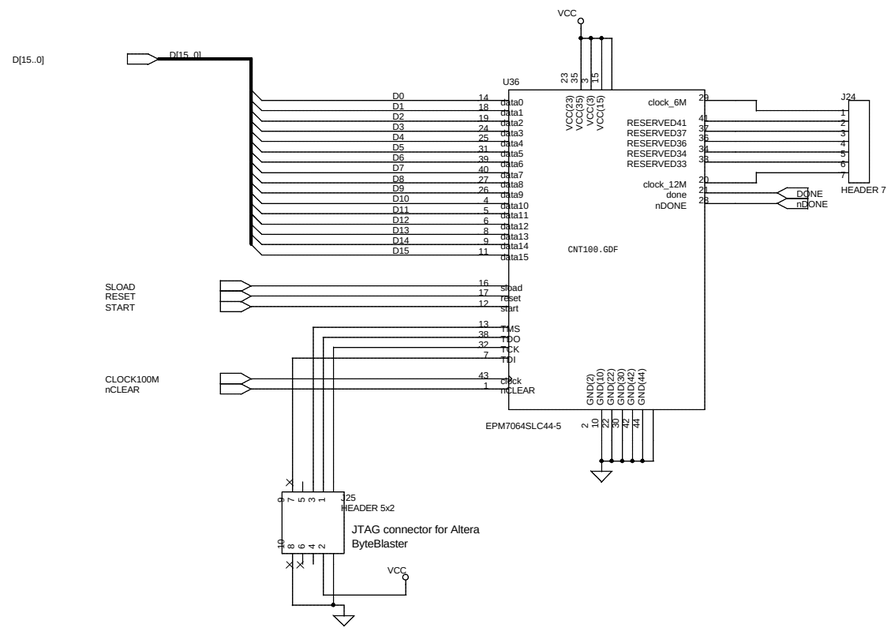

Power supply bypass caps for
cnt100.gdf.
Four total: one on each side.

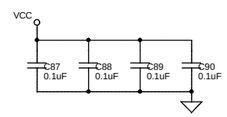

Original Design by Rob Merl

Anthony F. Pietryla
Diagnostics Group
Advanced Photon Source
Argonne National Laboratory
Argonne, IL 60439

100MHz Counter

Size	CAGE Code	DWG NO	Rev
C		CerenkovDetector.dsn	B

Wednesday, February 02, 2000

Scale

Sheet 4 of 16

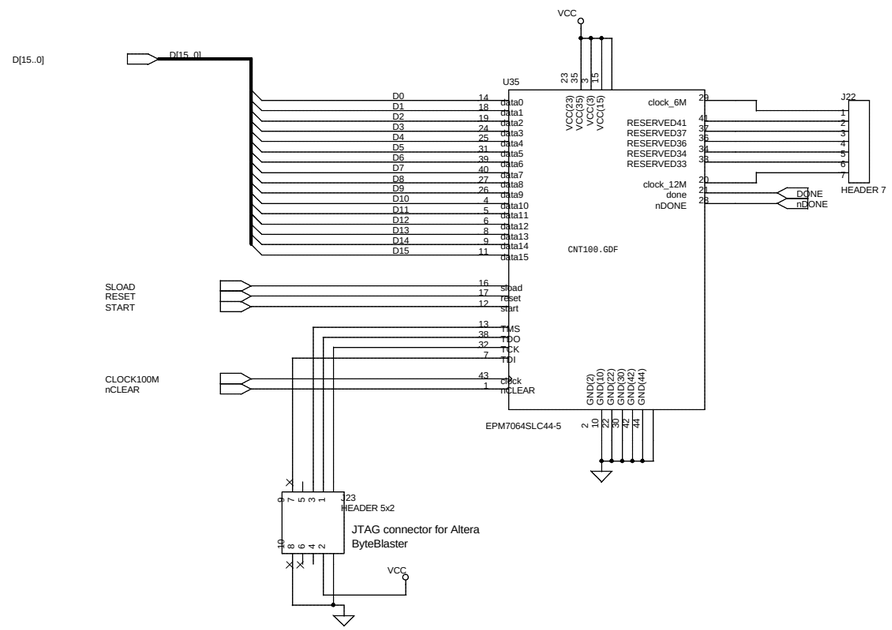

Power supply bypass caps for
cnt100.gdf.
Four total: one on each side.

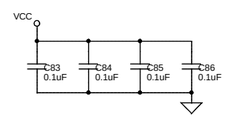

Original Design by Rob Merl

Anthony F. Pietryla
Diagnostics Group
Advanced Photon Source
Argonne National Laboratory
Argonne, IL 60439

100MHz Counter

Size	CAGE Code	DWG NO	Rev
C		CerenkovDetector.dsn	B

Wednesday, February 02, 2000

Scale

Sheet 5 of 16

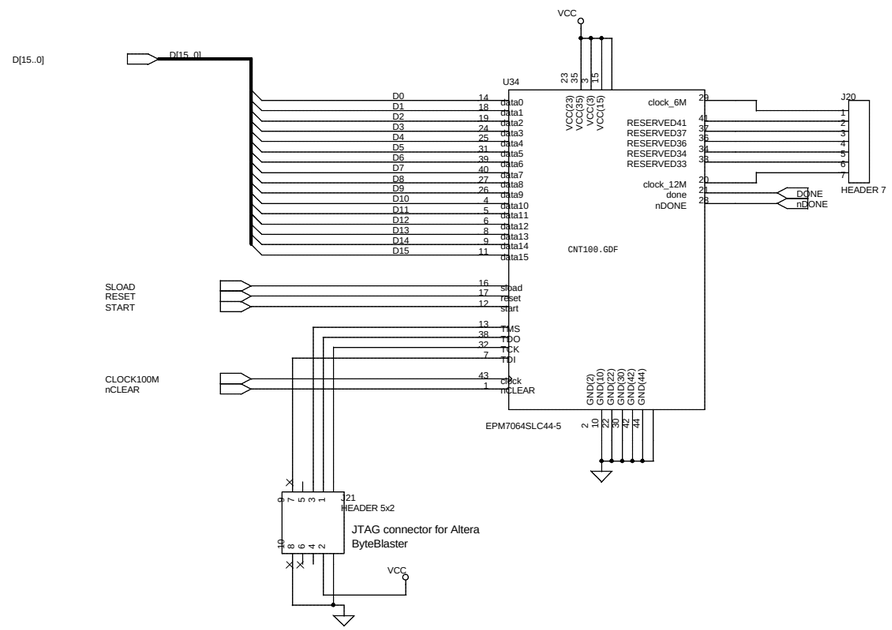

Power supply bypass caps for cnt100.gdf.
Four total: one on each side.

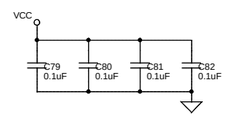

Original Design by Rob Merl

Anthony F. Pietryla
Diagnostics Group
Advanced Photon Source
Argonne National Laboratory
Argonne, IL 60439

100MHz Counter

Size	CAGE Code	DWG NO	Rev
C		CerenkovDetector.dsn	B

Wednesday, February 02, 2000

Scale

Sheet 6 of 16

Vo = 1/(RC) * integral{Vi(t)}, from 0 to t

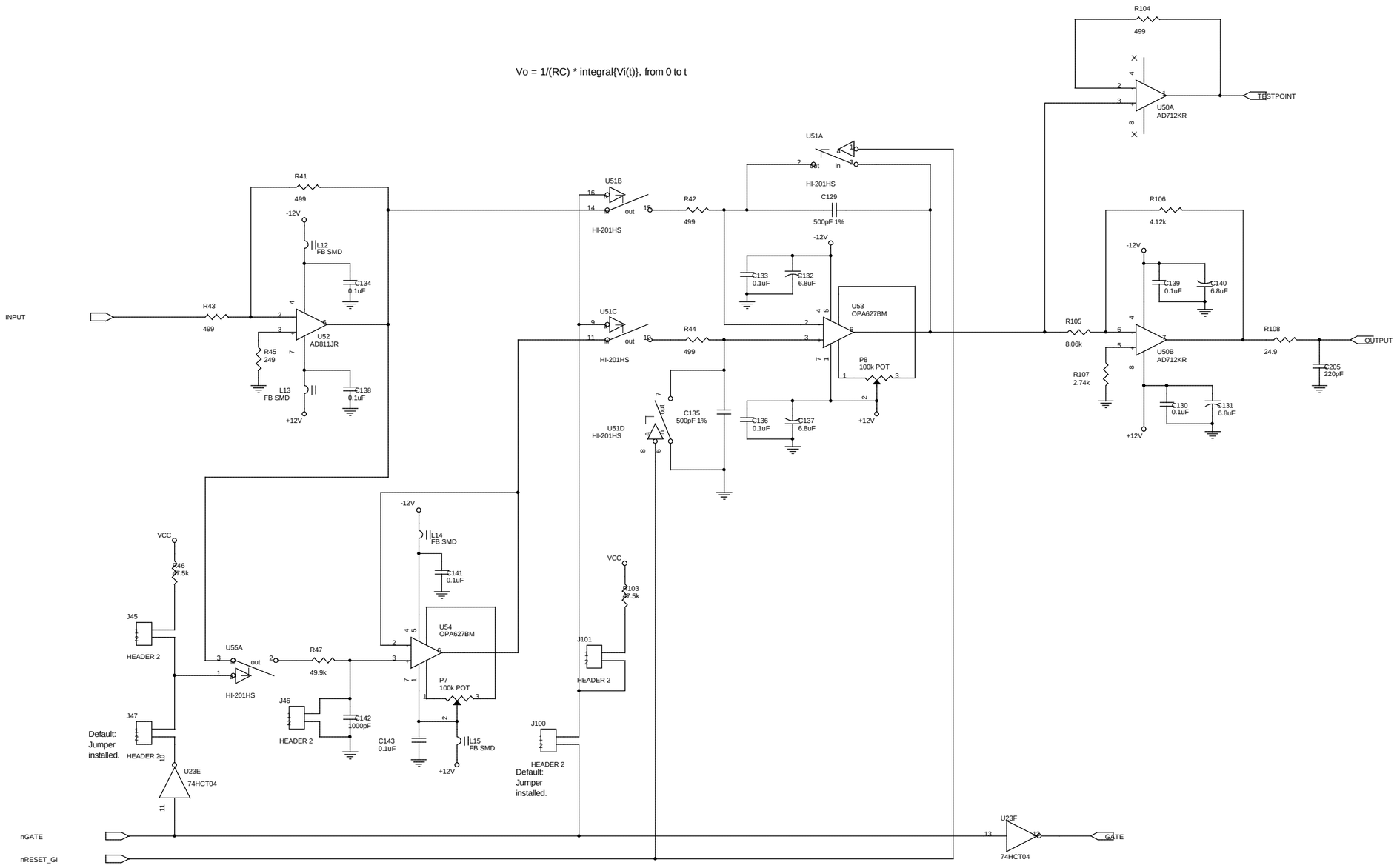

power supply
bypass cap
for '04

power supply
bypass cap
for HI-201

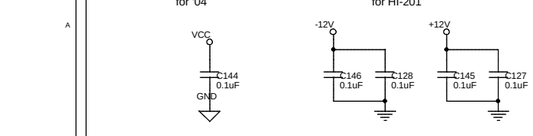

Unused parts on this
page.

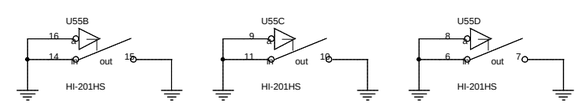

Circuit on this page is based on X.
Wang's Gated integrator.

Anthony F. Pietryla
Diagnostics Group
Advanced Photon Source
Argonne National Laboratory
Argonne, IL 60439

Fast Gated Integrator

Size	CAGE Code	DWG NO	Rev
C		CerenkovDetector.dsn	B

Thursday, February 03, 2000

Scale

Sheet 7 of 16

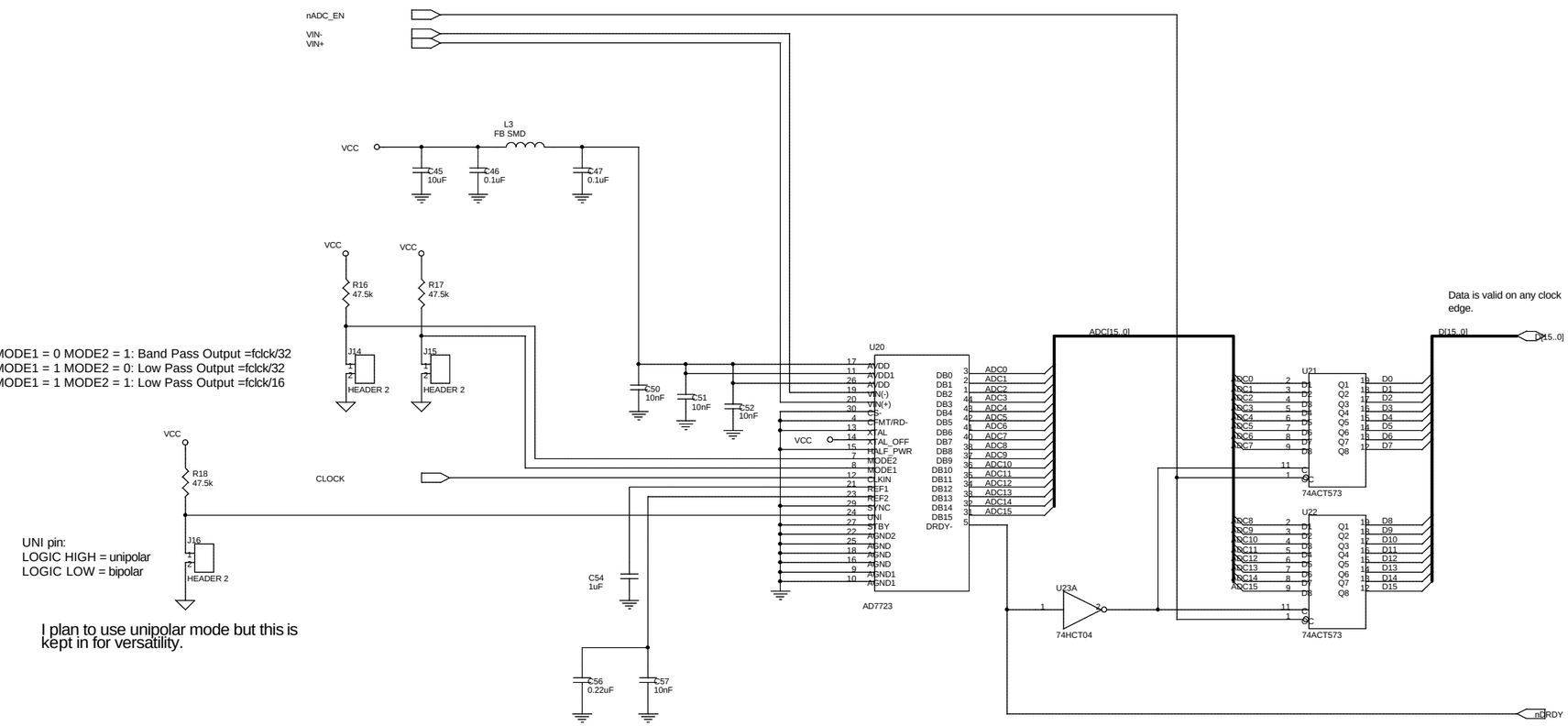

Power supply bypass caps for AD7723, one on each side.

Power supply bypass caps for '673

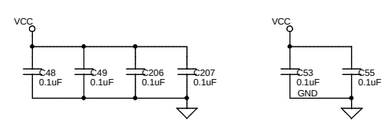

Original Design by Rob Merl

Anthony F. Pietryla
Diagnostics Group
Advanced Photon Source
Argonne National Laboratory
Argonne, IL 60439

16 bit ADC

Size	CAGE Code	DWG NO	Rev
C		CerenkovDetector.dsn	B

Wednesday, February 02, 2000

Scale

Sheet 8 of 16

Vo = 1/(RC) * integral{Vi(t)}, from 0 to t

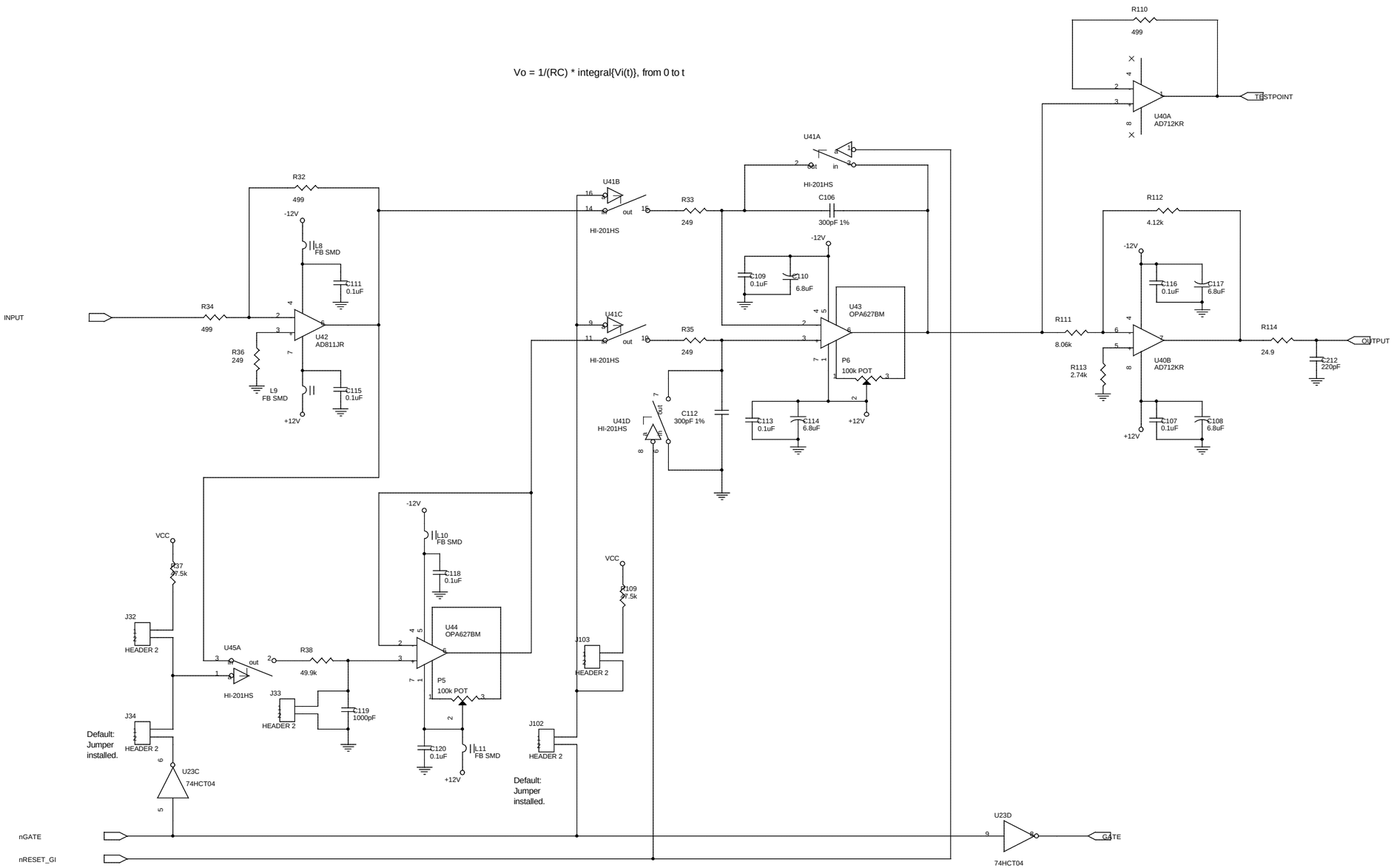

power supply
bypass cap
for HI-201

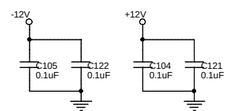

Unused parts on this
page.

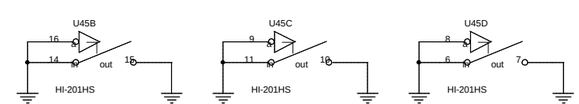

Circuit on this page is based on X.
Wang's Gated integrator.

Anthony F. Pietryla
Diagnostics Group
Advanced Photon Source
Argonne National Laboratory
Argonne, IL 60439

Slow Gated Integrator

Size	CAGE Code	DWG NO	Rev
C		CerenkovDetector.dsn	B

Thursday, February 03, 2000

Scale

Sheet 9 of 16

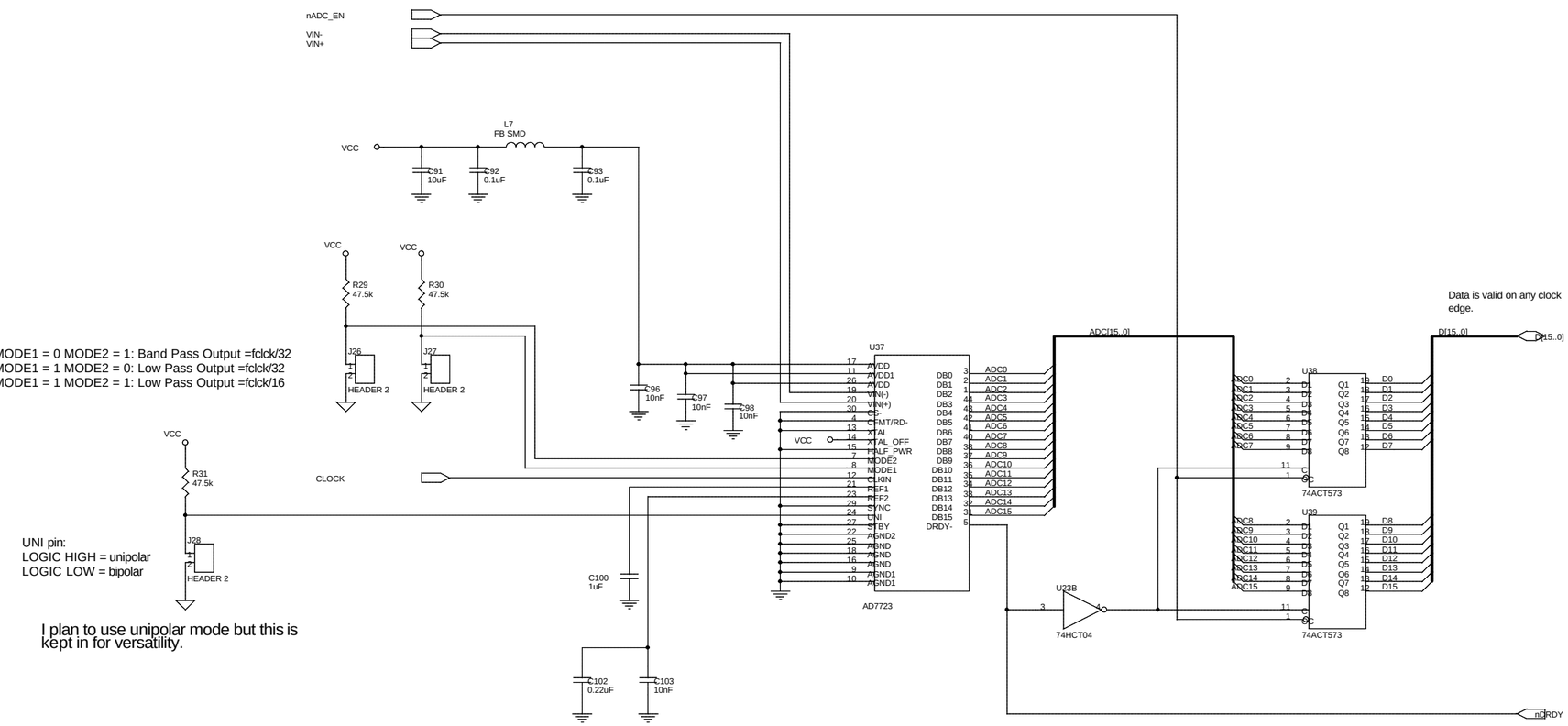

MODE1 = 0 MODE2 = 1: Band Pass Output =fclck/32
MODE1 = 1 MODE2 = 0: Low Pass Output =fclck/32
MODE1 = 1 MODE2 = 1: Low Pass Output =fclck/16

UNI pin:
LOGIC HIGH = unipolar
LOGIC LOW = bipolar

I plan to use unipolar mode but this is kept in for versatility.

Power supply bypass caps for AD7723, one on each side.

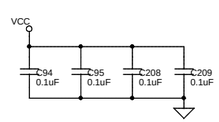

Power supply bypass caps for '673

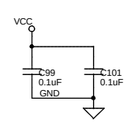

Original Design by Rob Merl

Anthony F. Pietryla
Diagnostics Group
Advanced Photon Source
Argonne National Laboratory
Argonne, IL 60439

16 bit ADC

Size	CAGE Code	DWG NO	Rev
C		CerenkovDetector.dsn	B

Wednesday, February 02, 2000

Scale

Sheet 10 of 16

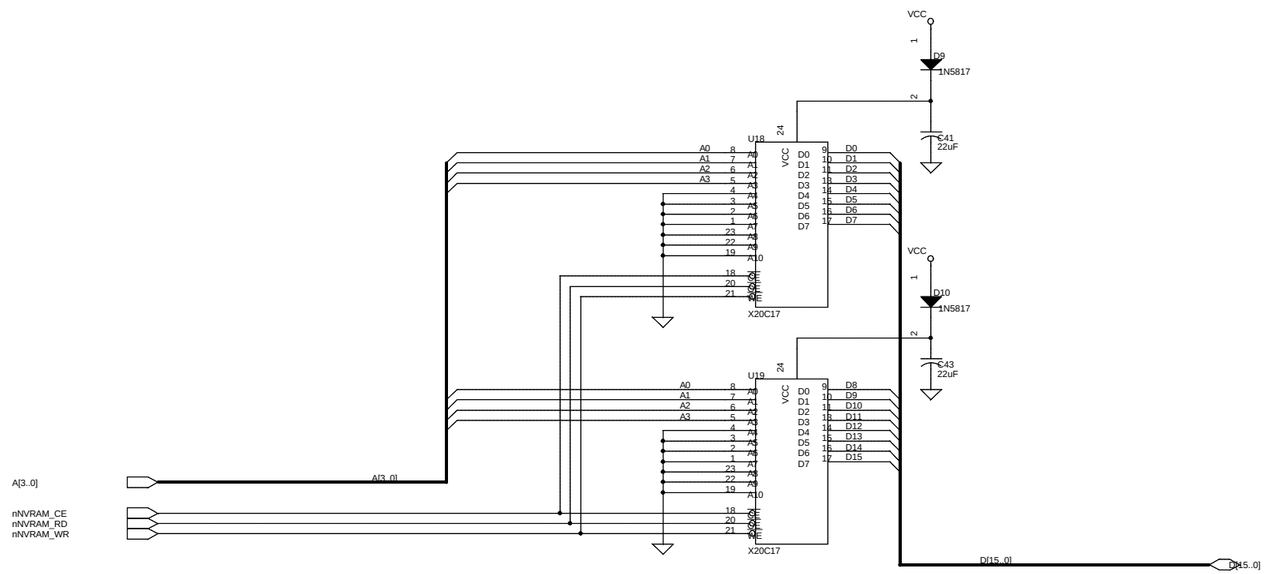

Power supply
bypass caps for
X20C17

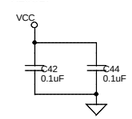

Original Design by Rob Merl

Anthony F. Pietryla
Diagnostics Group
Advanced Photon Source
Argonne National Laboratory
Argonne, IL 60439

NVRAM

Size	CAGE Code	DWG NO	Rev
C		CerenkovDetector.dsn	B

Wednesday, February 02, 2000

Scale

Sheet 11 of 16

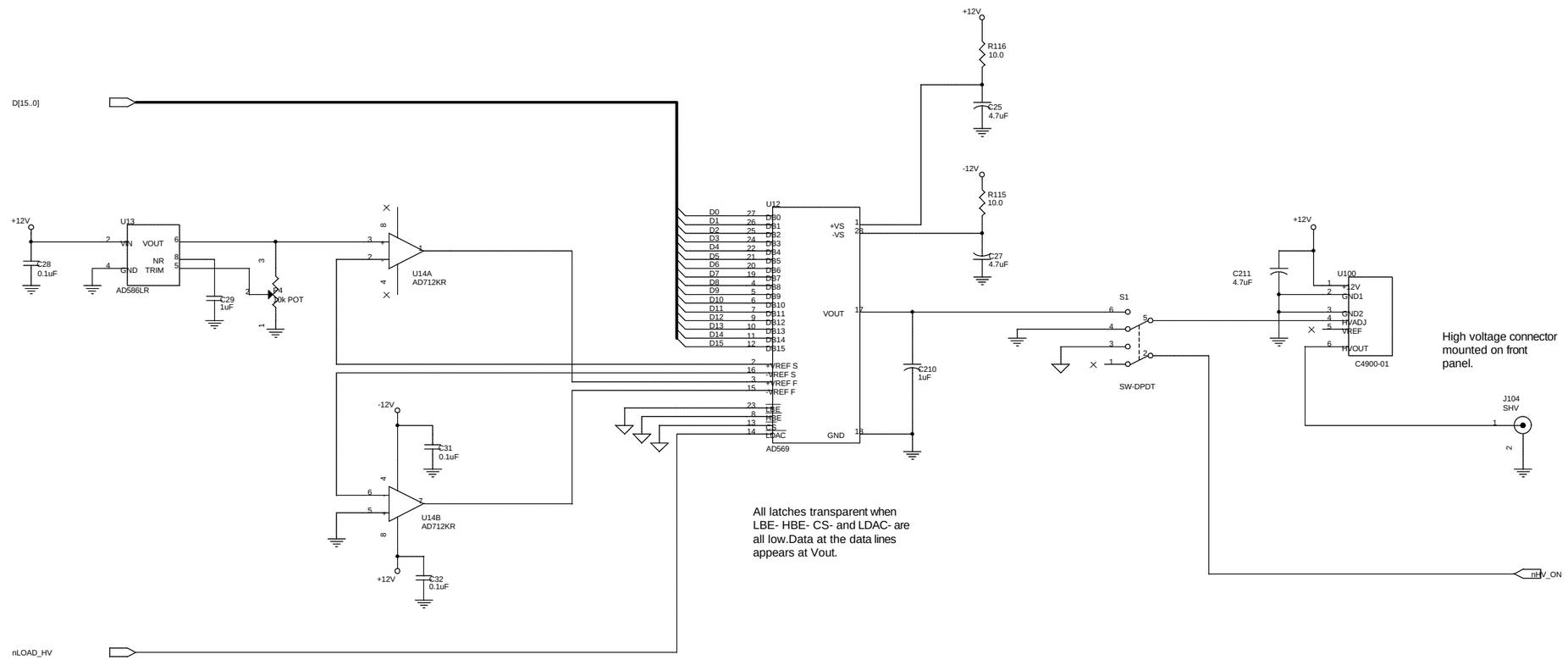

Original Design by Rob Merl

Anthony F. Pietryla
Diagnostics Group
Advanced Photon Source
Argonne National Laboratory
Argonne, IL 60439

High Voltage Control DAC

Size	CAGE Code	DWG NO	Rev
C		CerenkovDetector.dsn	B

Thursday, February 03, 2000

Scale

Sheet 12 of 16

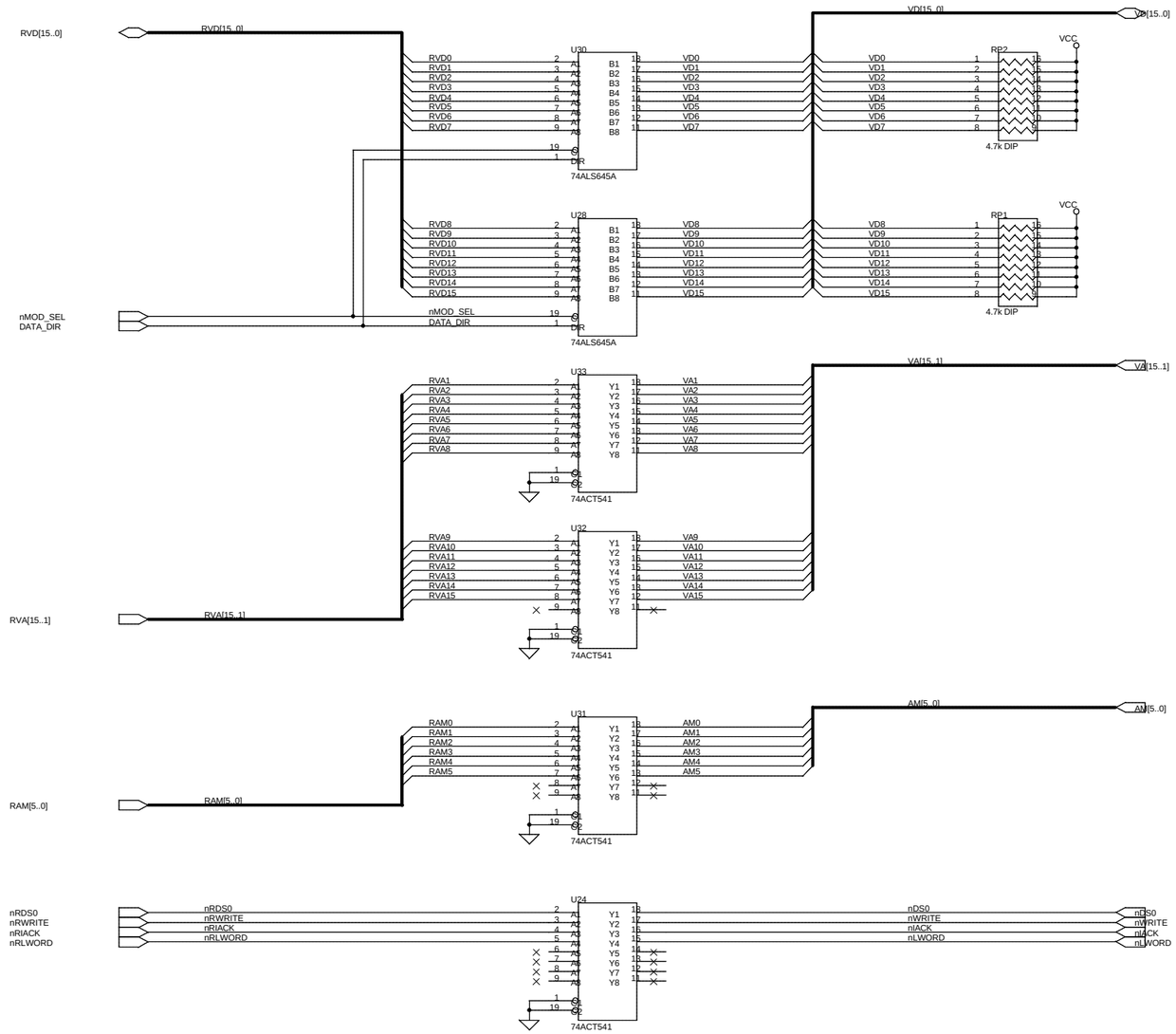

Power supply bypass caps for '541

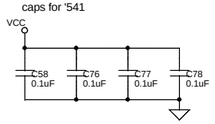

Power supply bypass caps for '645

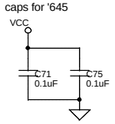

Original Design by Rob Merl

Anthony F. Pietryla
Diagnostics Group
Advanced Photon Source
Argonne National Laboratory
Argonne, IL 60439

Data Buffers

Size	CAGE Code	DWG NO	Rev
C		CerenkovDetector.dsn	B

Thursday, February 03, 2000

Scale

Sheet 13 of 16

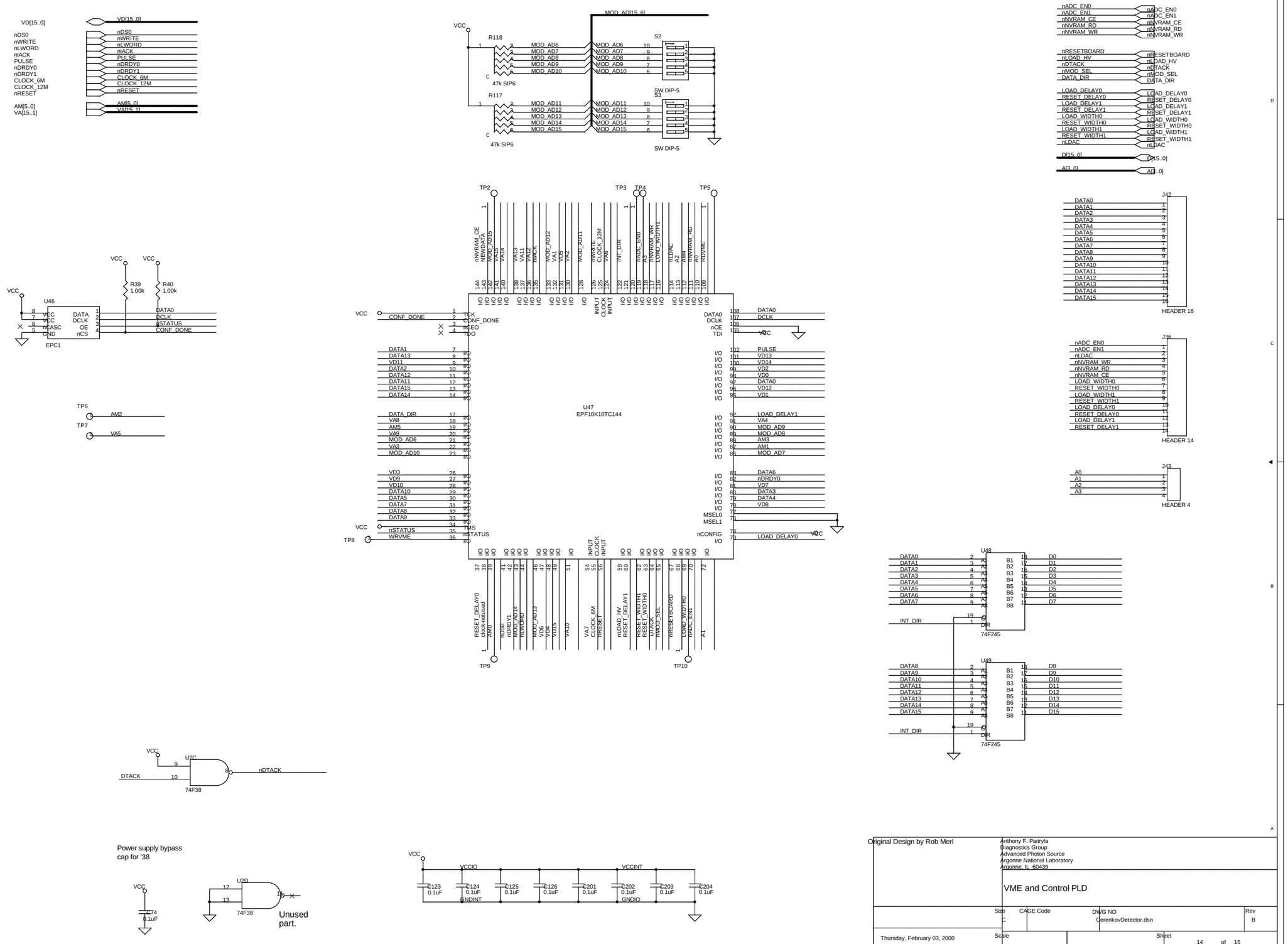

Original Design by Rob Merl

Anthony F. Pietryla
Diagnostics Group
Advanced Photon Source
Argonne National Laboratory
Argonne, IL 60439

VME and Control PLD

Size	CAGE Code	DWG NO	Rev
C		CerenkovDetector.dsn	B

Thursday, February 03, 2000

Scale

Sheet 14 of 16

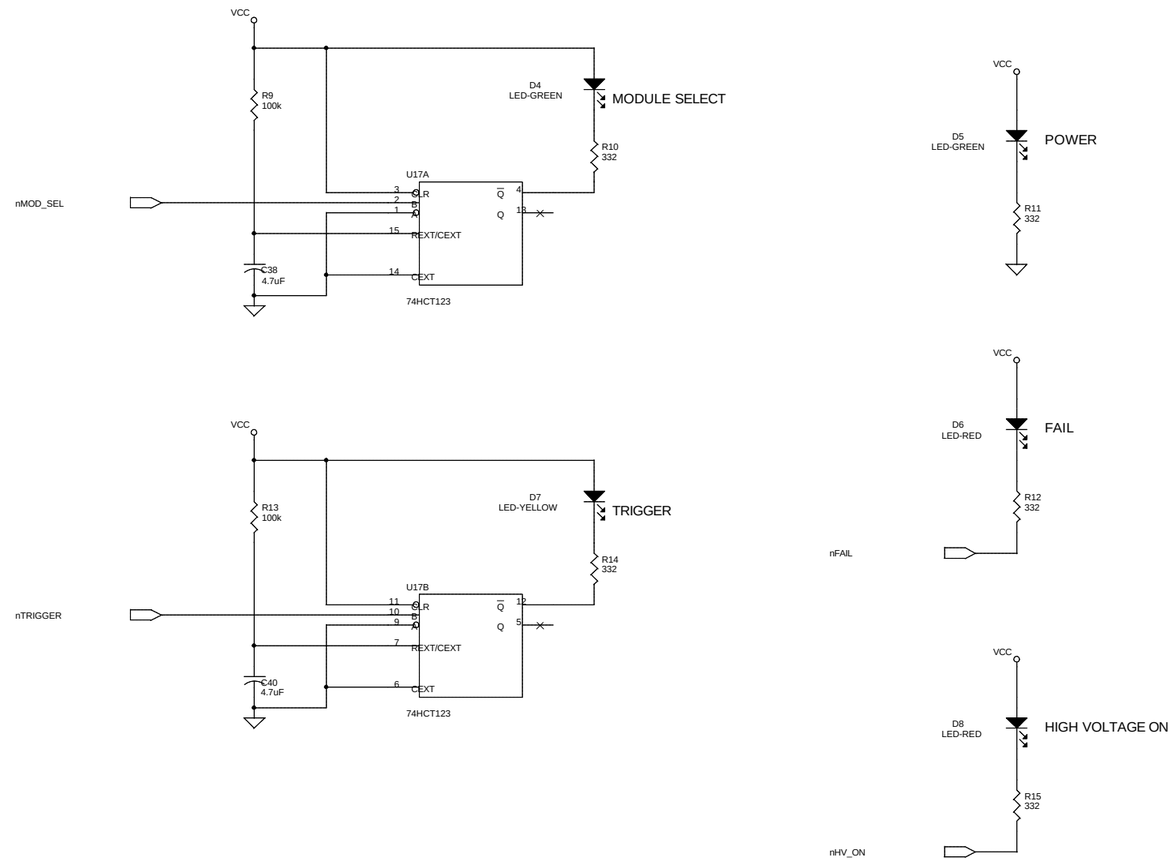

Power supply bypass cap for '123

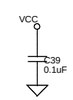

Original Design by Rob Merl

Anthony F. Pietryla
Diagnostics Group
Advanced Photon Source
Argonne National Laboratory
Argonne, IL 60439

LED Indicators

Size	CAGE Code	DWG NO	Rev
C		CerenkovDetector.dsn	A

Thursday, February 03, 2000

Scale

Sheet 15 of 16

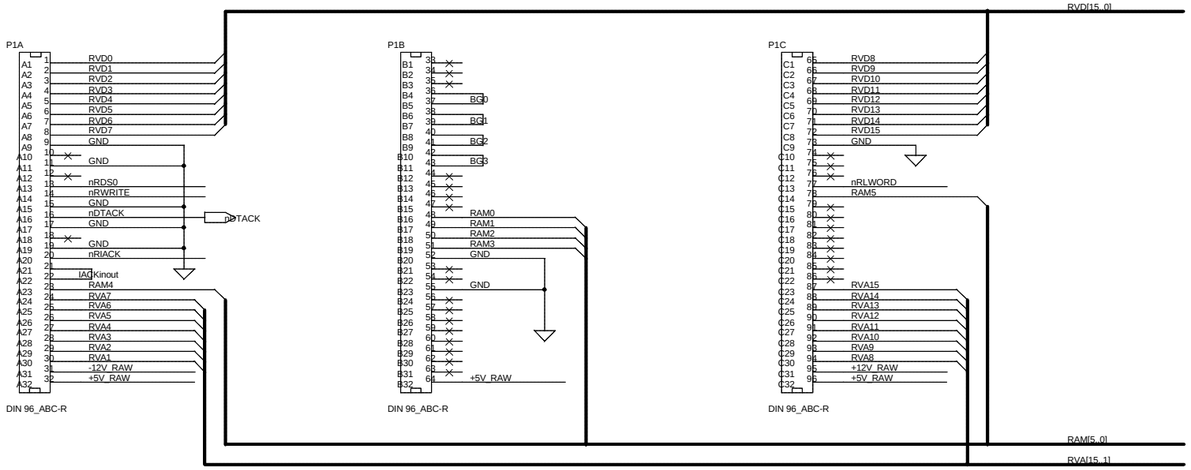

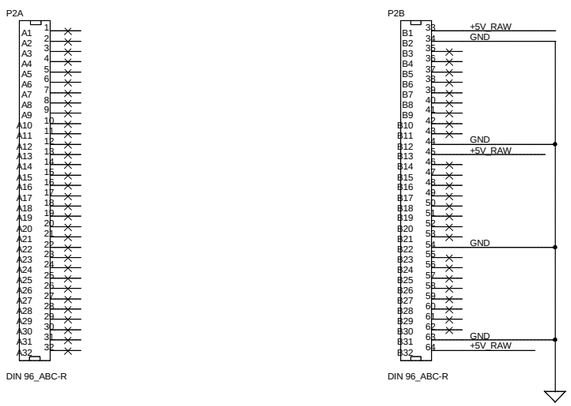

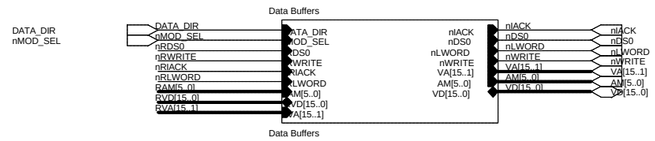

Page 13

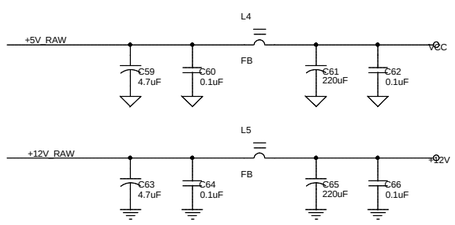

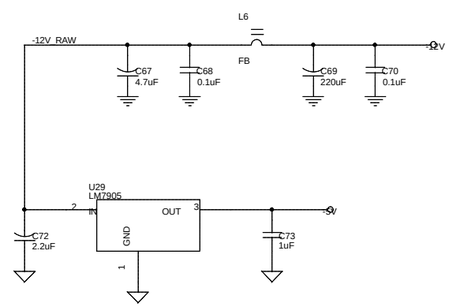

Original Design by Rob Merl

Anthony F. Pietryla
Diagnostics Group
Advanced Photon Source
Argonne National Laboratory
Argonne, IL 60439

VME Connectors

Size	CAGE Code	DWG NO	Rev
C		CerenkovDetector.dsn	B

Thursday, February 03, 2000

Scale

Sheet 16 of 16