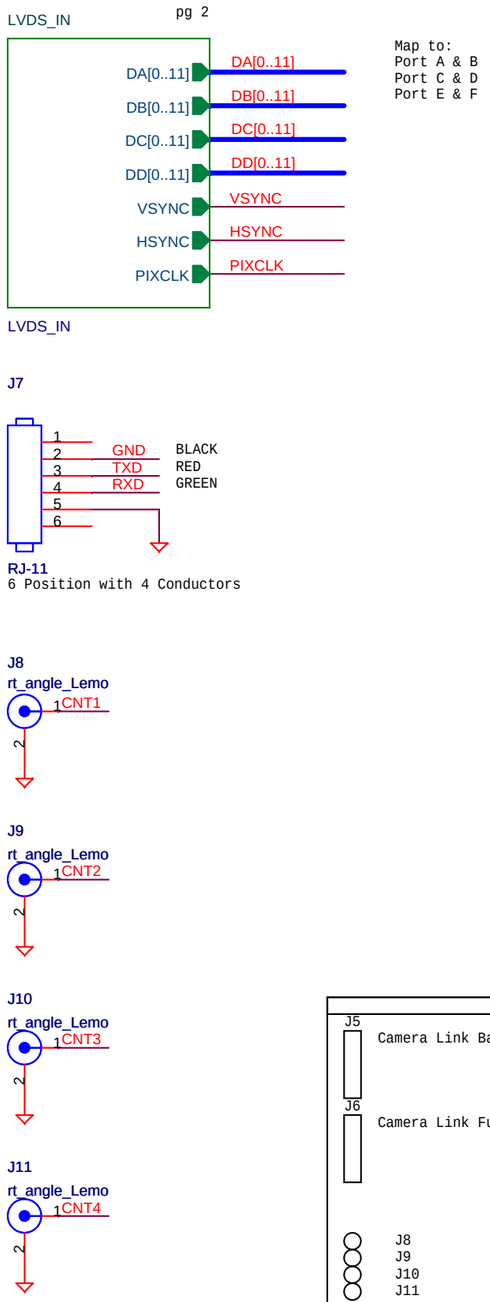

Map to:
Port A & B
Port C & D
Port E & F

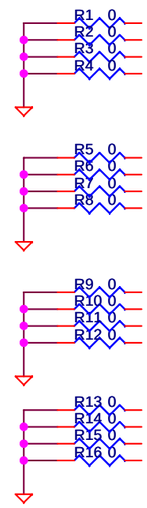

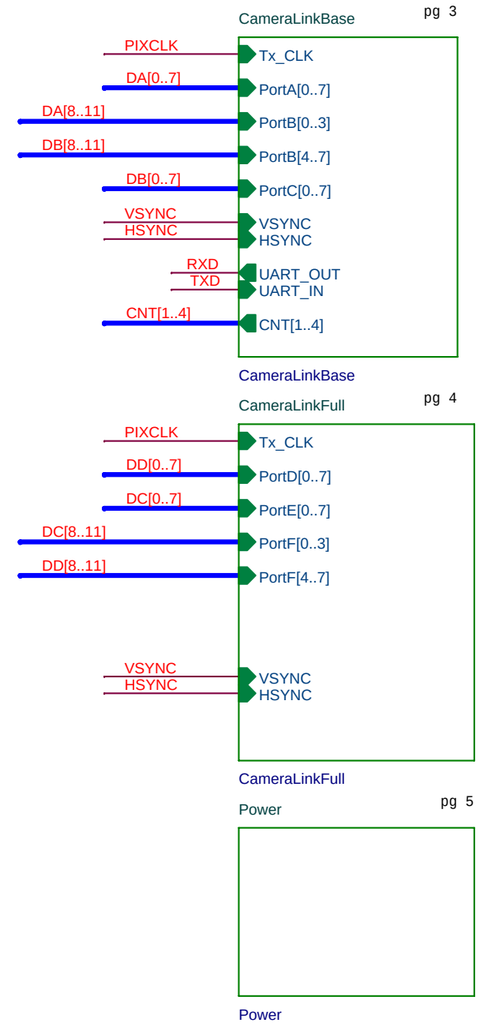

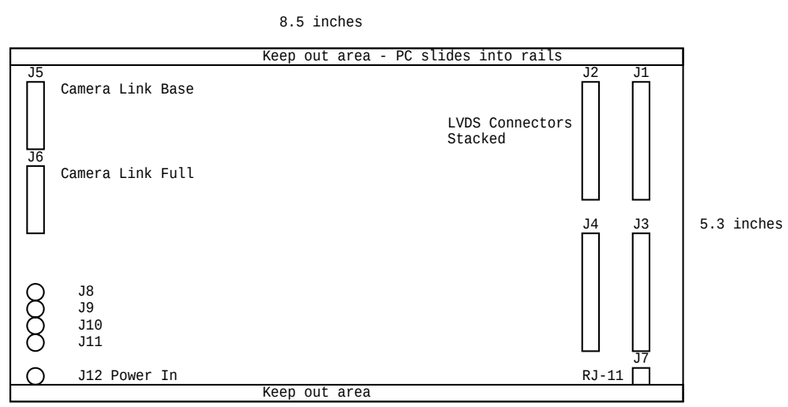

10-01-2007 Modified into a Standard Camera Link 12bit x 4 taps

01-15-2008 Finalized Medium Camera Link with 4 12 bit taps

ARGONNE NATIONAL LABORATORY	
BUILT FOR:	Alex Sandy
DIVISION:	APS/XSD/BTS
DESIGN BY:	J.T. Weizeorick
MODEL NO:	
PCB NO:	07PC018
SYSTEM NO:	
FILE NAME:	D:\OrcadX\.\lvds_to_cameralink.dsn
ORIG DATE:	22-March-2007

M1 ANL

Title: LVDS to Camera Link Module

Size: B | Document Number: <Doc> | Rev: A

Date: Tuesday, January 15, 2008 | Sheet 1 of 5

These are all differential pairs!!

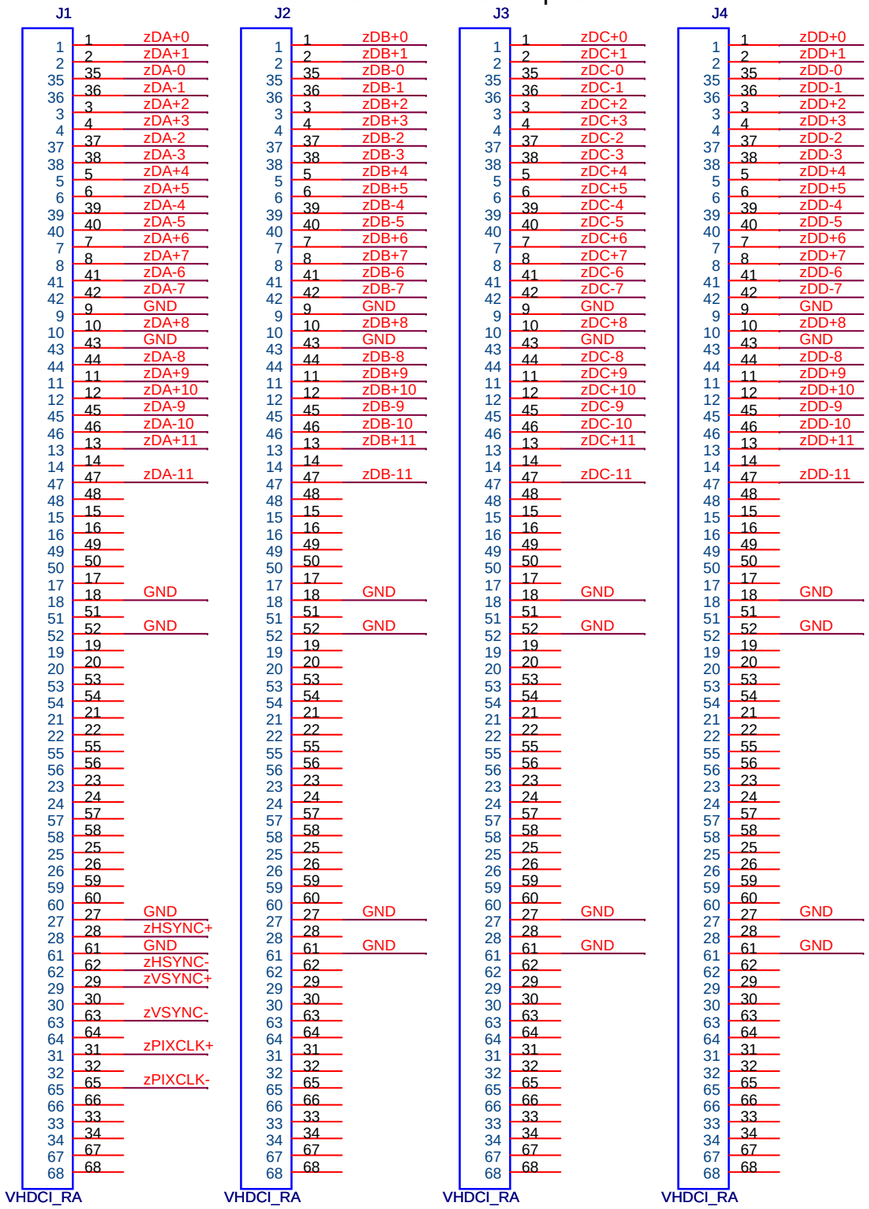

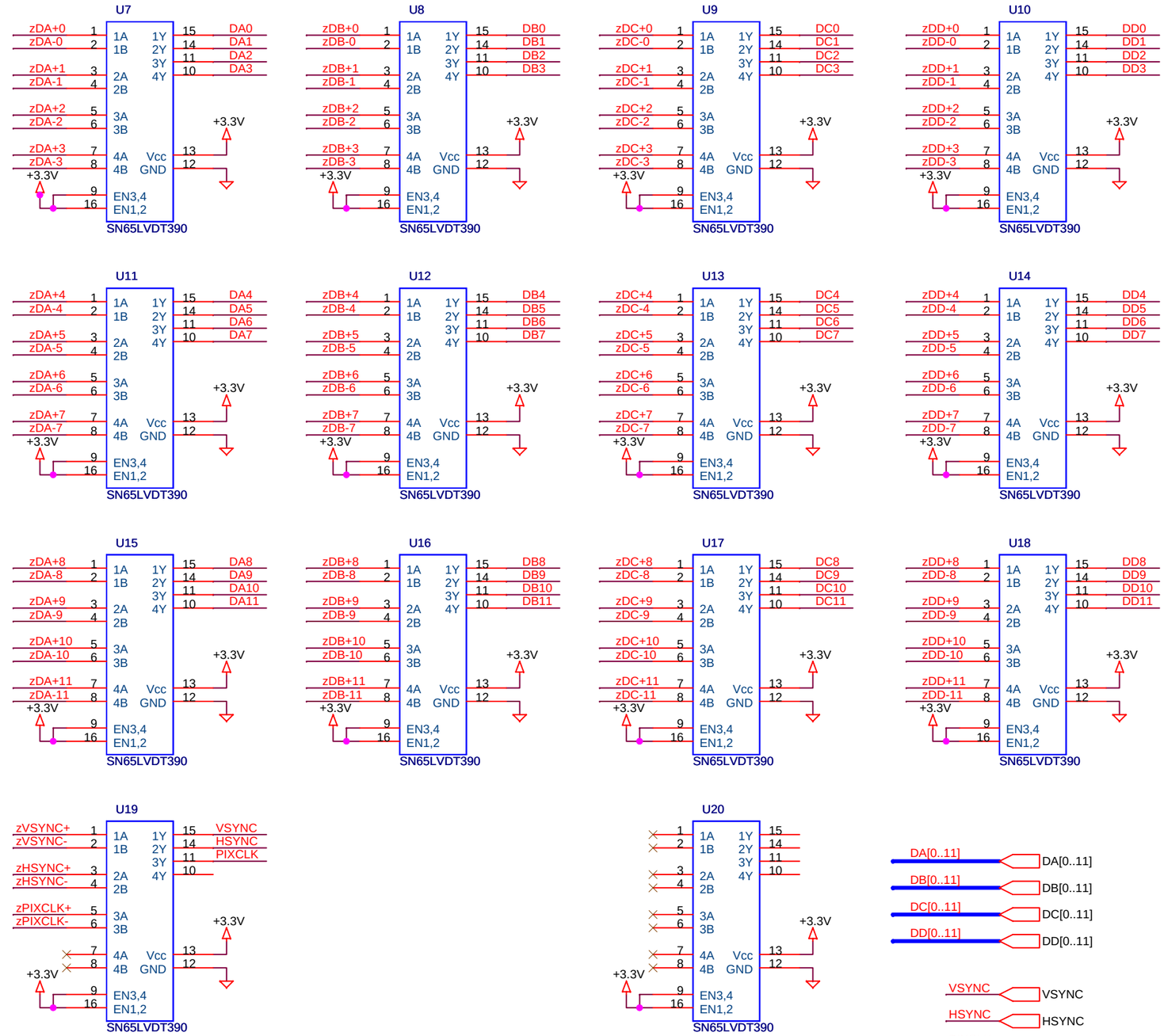

condo connectors that are 2 high
VHDCI STACKED ASSEMBLY
Molex 0743370072
0.80mm Pitch, Ultra+ VHDCI wire-to-board Receptical, Stacked, Right Angle with Enhaced Shield Version 1 Footproint, 136 Circuits (68*2=136pins)

Title	LVDS IN	
Size B	Document Number <Doc>	Rev A
Date: Monday, July 02, 2007	Sheet 2 of 5	

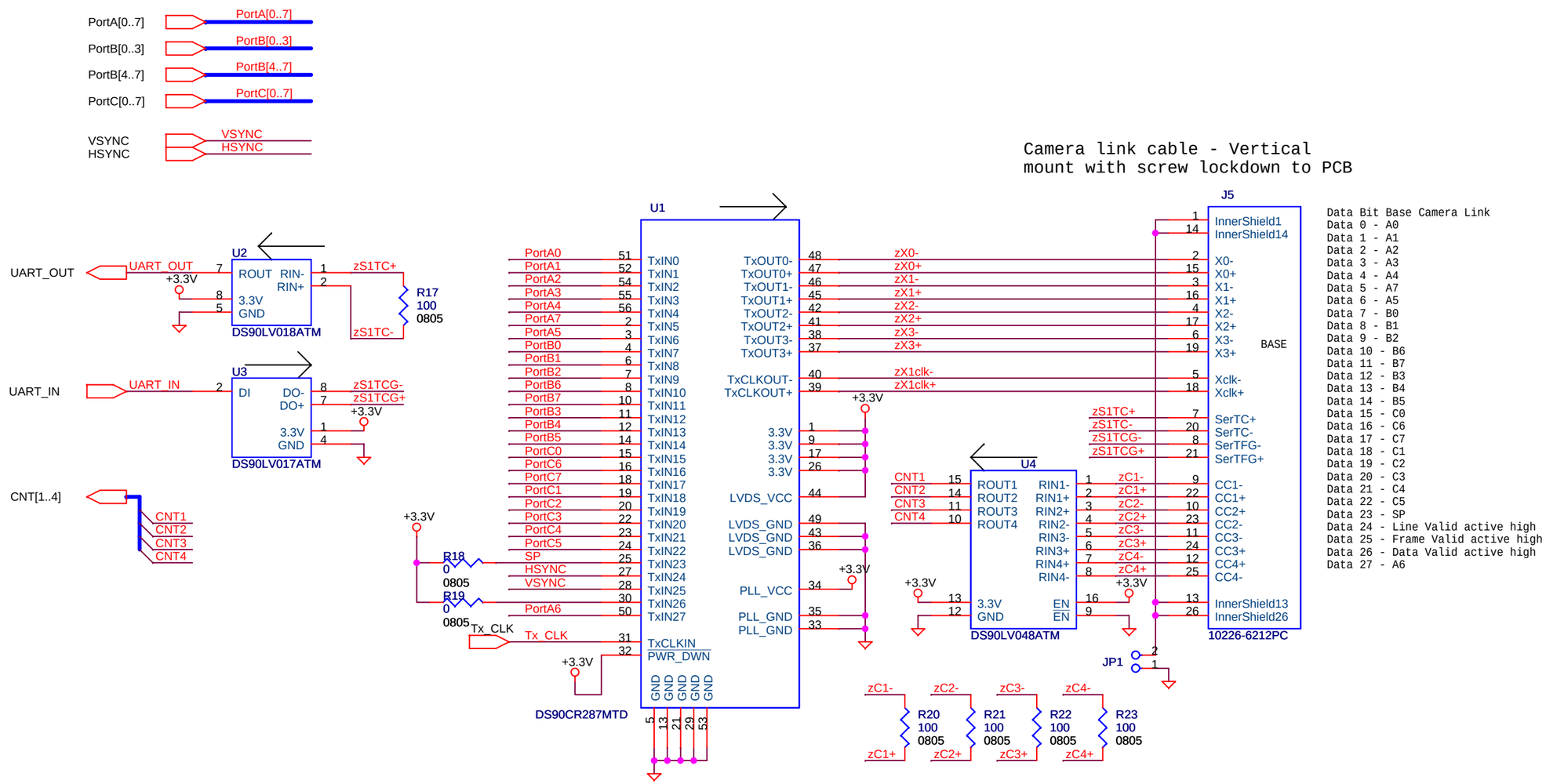

Title	Camera Link Base & UART
Size B	Document Number <Doc>
Rev	A
Date:	Monday, October 01, 2007
Sheet	3 of 5

Camera link cable - Vertical
mount with screw lockdown to PCB

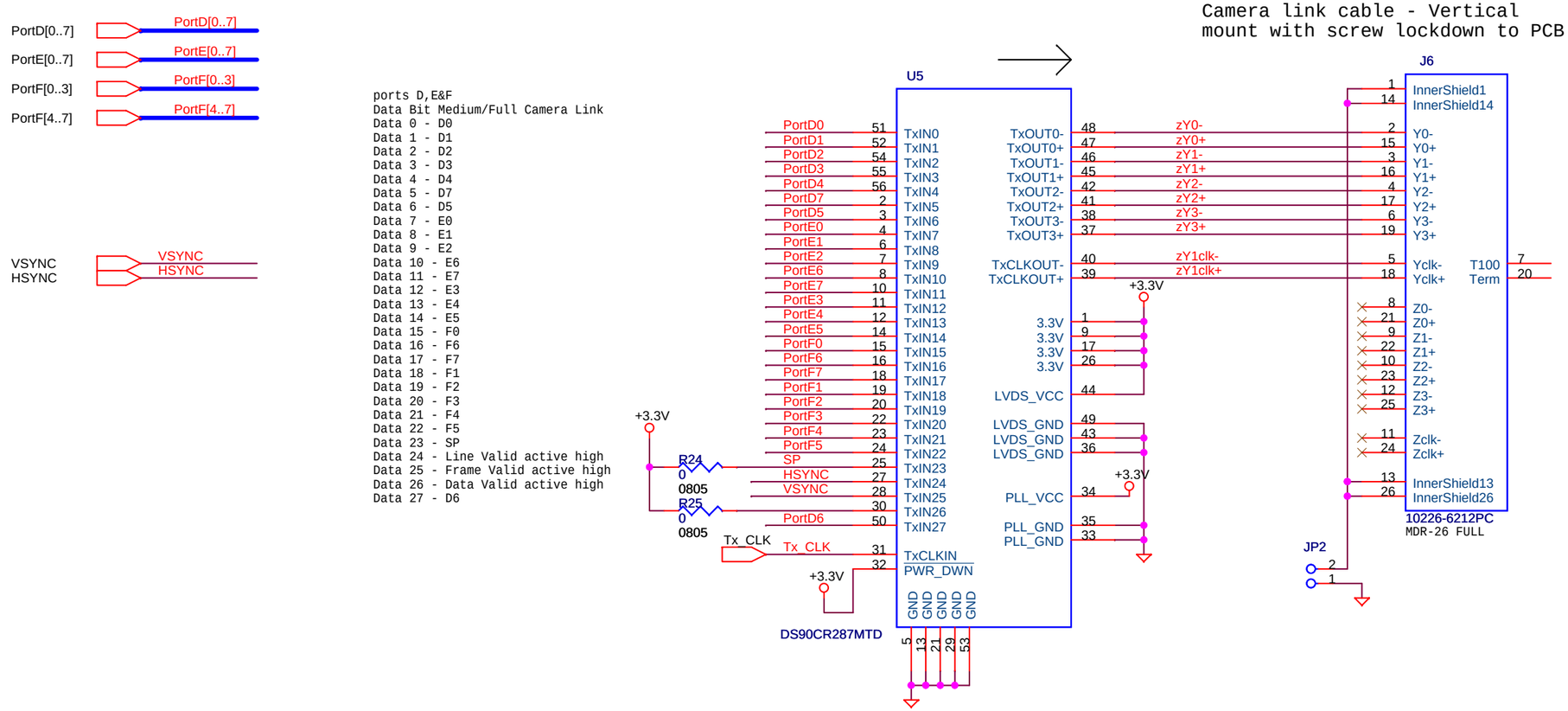

ports D,E&F
Data Bit Medium/Full Camera Link
Data 0 - D0
Data 1 - D1
Data 2 - D2
Data 3 - D3
Data 4 - D4
Data 5 - D7
Data 6 - D5
Data 7 - E0
Data 8 - E1
Data 9 - E2
Data 10 - E6
Data 11 - E7
Data 12 - E3
Data 13 - E4
Data 14 - E5
Data 15 - F0
Data 16 - F6
Data 17 - F7
Data 18 - F1
Data 19 - F2
Data 20 - F3
Data 21 - F4
Data 22 - F5
Data 23 - SP
Data 24 - Line Valid active high
Data 25 - Frame Valid active high
Data 26 - Data Valid active high
Data 27 - D6

ports G & H
Data Bit Full Camera Link
Data 0 - G0
Data 1 - G1
Data 2 - G2
Data 3 - G3
Data 4 - G4
Data 5 - G7
Data 6 - G5
Data 7 - H0
Data 8 - H1
Data 9 - H2
Data 10 - H6
Data 11 - H7
Data 12 - H3
Data 13 - H4
Data 14 - H5
Data 15 -
Data 16 -
Data 17 -
Data 18 -
Data 19 -
Data 20 -
Data 21 -
Data 22 -
Data 23 - SP
Data 24 - Line Valid active high
Data 25 - Frame Valid active high
Data 26 - Data Valid active high
Data 27 - G6

Title	Camera Link Full	
Size B	Document Number <Doc>	Rev A
Date: Tuesday, January 15, 2008	Sheet 4 of 5	

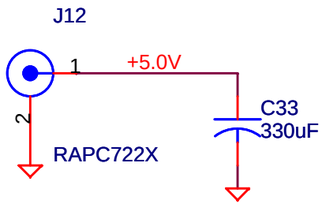

Power comes from Astrodyne regulated wall transformer
5V at 2A
SPU12A-102

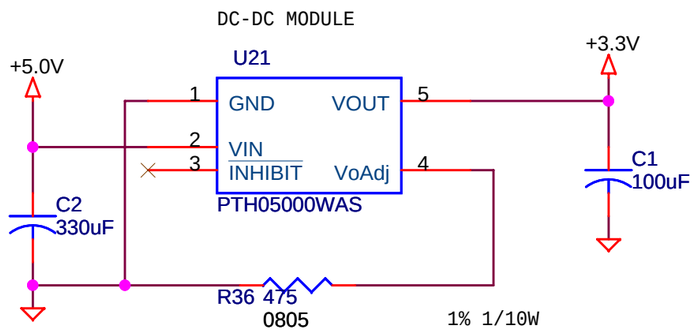

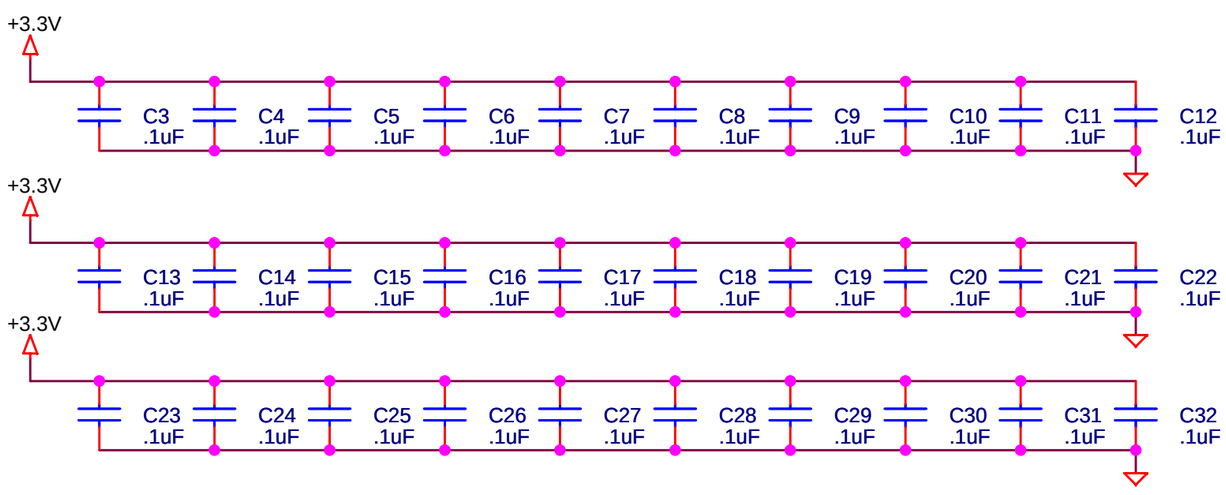

Title	Power Input -From wall transformer	
Size A	Document Number <Doc>	Rev A
Date: Monday, July 02, 2007	Sheet 5 of 5	