THE INFORMATION CONTAINED IN THIS DRAWING IS THE SOLE PROPERTY OF RADIANT DETECTOR TECHNOLOGIES, LLC. ANY REPRODUCTION IN PART OR WHOLE WITHOUT THE WRITTEN PERMISSION OF RADIANT DETECTOR TECHNOLOGIES, LLC IS PROHIBITED.

REVISIONS

ZONE	REV.	DESCRIPTION	DATE	APPROVED
	A	NEW RELEASED DRAWING	7-24-03	

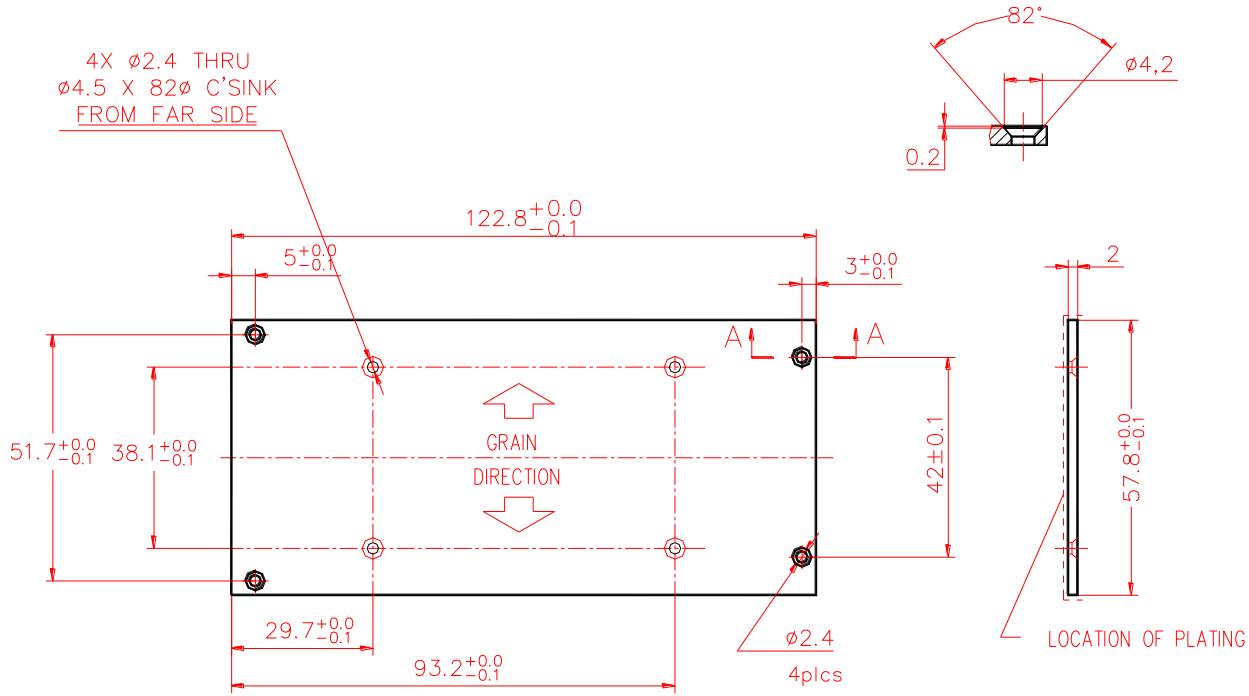

NOTES:

1. DEBURR AND BREAK ALL SHARP EDGES AND CORNERS.
2. FINISH: CLEAR ANODIZE PER MIL-8625F
   CLASS 1 ; TYPE II; OUTSIDE SURFACES ONLY

	VORTEX XRD
NEXT ASSY	USED ON
APPLICATION	

UNLESS OTHERWISE SPECIFIED DIMENSIONS ARE IN MILIMETERS TOLERANCES ARE:

DECIMALS .XX +/- 0.10 .XXX +/- 0.05 ANGLE 1°

MATERIAL AA-1375-15

FINISH 32 / 2

DO NOT SCALE DRAWING

THIRD ANGLE PROJECTION

APPROVALS	DATE
DRAWN B.GAPASIN	7-24-03
CHECKED	
RESP DESIGNER	
APPROVED	

Radiant Detector Technologies,LLC
19355 Business Center Drive, Suite #8
Northridge, CA 91324

BOTTOM PANEL
WITH MTG PLATE OPTION

SIZE | DWG. NO. AA-1375-55 | REV. A

SCALE: 1:1 | CAD FILE: AA-1375-55 | SHEET 1 OF 1