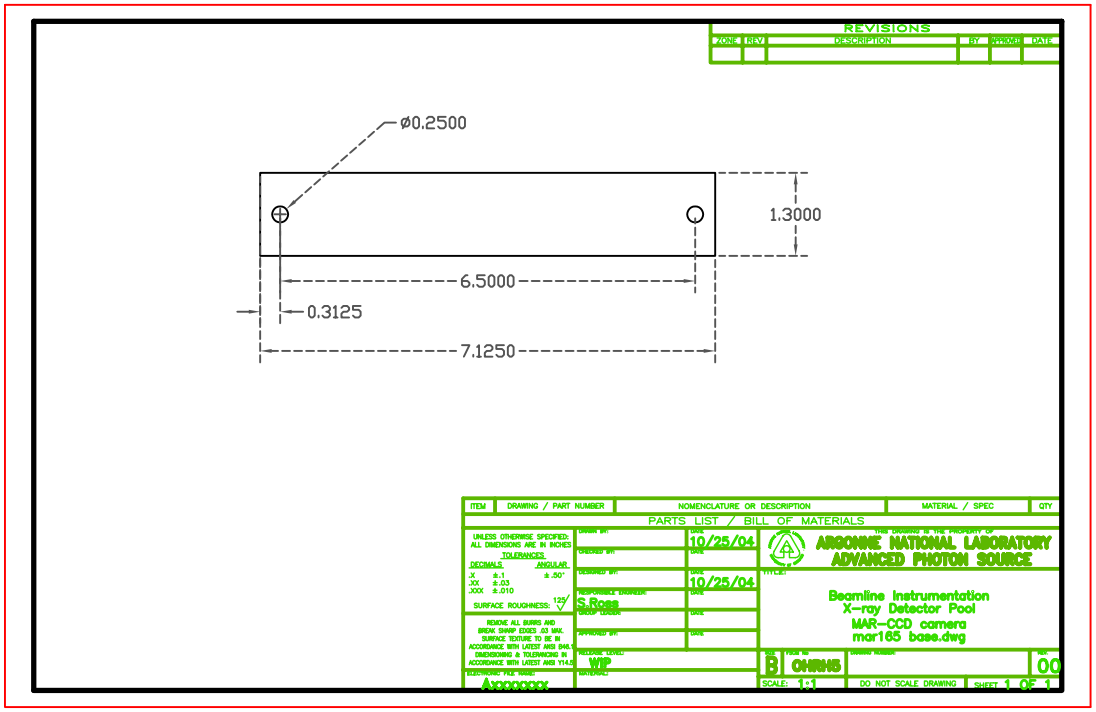
REVISIONS
ZONE
REV
DESCRIPTION
BY
APPROVED
DATE
ø0.2500
1.3000
6.5000
0.3125
7.1250
ITEM
DRAWING / PART NUMBER
NOMENCLATURE OR DESCRIPTION
MATERIAL / SPEC
QTY
PARTS LIST / BILL OF MATERIALS
UNLESS OTHERWISE SPECIFIED: ALL DIMENSIONS ARE IN INCHES
TOLERANCES
DECIMALS
ANGULAR
.X ±.1 ±.50°
.XX ±.03
.XXX ±.010
SURFACE ROUGHNESS: 125
REMOVE ALL BURRS AND BREAK SHARP EDGES .03 MAX. SURFACE TEXTURE TO BE IN ACCORDANCE WITH LATEST ANSI B46.1 DIMENSIONING & TOLERANCING IN ACCORDANCE WITH LATEST ANSI Y14.5
ELECTRONIC FILE NAME:
Axxxxxxx
DRAWN BY:
DATE
10/25/04
CHECKED BY:
DATE
DESIGNED BY:
DATE
10/25/04
RESPONSIBLE ENGINEER:
S.Ross
DATE
GROUP LEADER:
DATE
APPROVED BY:
DATE
RELEASE LEVEL:
WIP
MATERIAL:
THIS DRAWING IS THE PROPERTY OF
ARGONNE NATIONAL LABORATORY
ADVANCED PHOTON SOURCE
TITLE:
Beamline Instrumentation
X-ray Detector Pool
MAR-CCD camera
mar165 base.dwg
SIZE
B
FSCM NO
OHRH5
DRAWING NUMBER
REV
00
SCALE: 1:1
DO NOT SCALE DRAWING
SHEET 1 OF 1