AXAS

(Analog X-ray Acquisition System)

Operating Manual

KETEK

Creative Detector Solutions

Caution

- This document contains data valid only for the AXAS system you purchased it with. Please do not use it as a reference to operate any other devices you purchased earlier or later on from our company.
- Do not drop or cause mechanical shock to the AXAS, especially if you purchased a system equipped with an AP3.3 radiation entrance window.
- Avoid any kind of high forces and/or torques during mounting of the AXAS, especially if you purchased a system equipped with an AP3.3 radiation entrance window.
- Do not operate the AXAS at a temperature (measured at the steel electronics case) above 35 °C. Apply additional cooling to the steel case if necessary (contact to heat sink, gills, PC air cooler etc.). The performance of the system will noticeably worsen above this temperature.
- Never change the setting of any potentiometer inside the electronics case. Every system is adjusted carefully before delivery. We will not take any warranty for systems damaged by manipulation of these potentiometers or adjust the system a second time for free, if you did not contact us first.
- If you purchased a system and an ADC/MCA it is possible to adjust some detector parameters (voltages) via software. Do not change these settings without advice of KETEK. You may damage the system seriously by changing these settings. No warranty will be taken by KETEK in this case.
- Do not touch or apply any mechanical force or shock to the radiation entrance window (Beryllium or Ap3.3) integrated at the front end of the AXAS. The integrity of each window is checked carefully before delivery and no warranty will be taken if it is damaged by the customer. Moreover breaking the window during operation of the system will most probably destroy the whole detector.
- Take care to connect the output contacts and the test input properly as it is described in this manual later on.
- Take care to follow the instructions regarding the power input to the system given in this manual. Otherwise the system may be destroyed. We strongly recommend our own power supply.
- Do not expose the detector to a high particle flux (such as ions or electrons). Damages done by incident particles will not be covered under warranty.
- Concerning radiation damage done by photons a maximal dose is guaranteed for each detector. In case of malfunction it is due to the customer to bring evidence that this dose has not been applied.

KETEK

* The picture on the title page shows the AXAS detector system

Operating instructions

The AXAS-detector system should be kind of plug and play. That means you should not have to change anything on the system itself. If this though is necessary contact us first in any case! After you unpacked the different components please connect them to each other and the components you supply by yourself regarding to the connection diagram inside this manual.

Packing list:

You should have received the following components:

- AXAS detector system, including detector, preamplifier, shaping amplifier (removed on customers demand), temperature control and internal power supply
- External ± 12 V power supply if purchased.
- Additional shaping time boards if purchased.
- This manual.
- ADC/MCA incl. set of connection cables and manual if purchased

Dimensions and HD-15 connector:

A technical drawing inside this manual gives the dimensions of the AXAS system, the pin definition of the integrated male HD-15 connector, and the definitions of the other input and output connectors in detail. Please never connect any pin, input or output in a different way or you may destroy the detector. Please note that the drawing corresponds to an AXAS system with a 100 mm snout. So this dimension may vary if you purchased a system with a different snout length.

Shaped output / radiation entrance window:

The BNC / Shaper OUT output provides an amplified, shaped signal (see example inside this manual / typical rise and fall time curves are attached too) within a voltage range from 0 to about 6 V (input impedance 1 mega ohm). It can be used as input signal to any standard ADC, although we recommend our own ADC/MCA ($AXAS^{MCA}$). The detector is calibrated in a way that the mentioned voltage spread covers a spread of x-ray energies from 0 to the upper energy limit you specified. The theoretical lower limit of the detector is about 200 eV but due to the entrance window you purchased the practical lower limit may be higher (e.g. for Beryllium about 1 keV). For more detailed information on the transmission of your entrance window please have a look at the attached transmission curves.

Pre-amplified output / test pulse input:

If you did not purchase our shaper the BNC / Shaper OUT does not provide any signal. In any case a pre-amplified signal is provided by BNC / Preamp. OUT. BNC / Test Input allows the user to connect a pulse generator to the system and test the output by applying different test pulses.

Pile-up rejection:

The pins 1 and 2 of the HD-15 connector each provide a TTL signal as input for an ADC with integrated pile-up rejection (not_PUR is inverted with respect to PUR / see attached oscilloscope screen shot). If you purchased a power supply these signals can be taken also at the side of the connection plug (PUR = yellow, not_PUR = green)

Ambient temperature:

Please note that the detector performance depends on the ambient temperature you provide. The metal housing of the AXAS system acts as a heat sink for the cooling mechanism of the detector. The housing should not have a temperature above 35 °C during operation. Anyway it is optimal if the housing stays at room temperature or somewhat below. So if possible attach an additional heat sink or apply active cooling to the housing.

Detector temperature:

The current temperature of the SDD detector integrated into your AXAS system can be monitored by reading the voltage given at the two temperature monitor output connectors (see technical drawing). This option is for service purposes mainly. More details are available on request.

Resolution (at high count rates) / shaping time:

Each detector has been tested carefully at the KETEK laboratory at Munich/Germany to redeem the guaranteed specifications. The guaranteed energy resolution was checked with reference to a measurement using the Mn K_α line of a Fe55 x-ray source and a shaping time of 1 µs. Please note that the best resolution you will observe depends on the shaping time and the count rate you use. For more detail have a look at the attached diagram giving the resolution of an example AXAS system in dependence of count rate and shaping time.

Peak shift at high count rates:

For high count rates a peak shift in the recorded spectra may occur depending on the applied count rate. The attached "AXAS – Peak Shift" diagram gives an example of this peak shift. Please note that the example we attached represents a kind of worst case scenario. The actual peak shift is different for every detector and should not exceed the given example by much.

Check the connection diagram:

If your system does not operate properly, please check all the connections referring to the connection diagram. Please also check by the two LEDs if the system is operational. If everything is connected the right way, please contact us before you open the AXAS and change any internal settings. YOU MAY DESTROY THE DETECTOR!!!

KETEK ADC/MCA

If you purchased an AXAS^{MCA} also several AXAS settings can be manipulated via the ADC software. This feature facilitates the service by far and may make a (re-)calibration of the detector system at your site possible. However, please do not change the settings without advice of KETEK or you may damage the detector.

In case of questions or warranty please contact:

Ketek GmbH
Gustav-Heinemann-Ring 125
D-81739 Munich

Mail: support@ketek.net
Tel.: ++498967346770
Fax.: ++498967346777

KETEK

Technical drawing of an AXAS system with a 100 mm snout

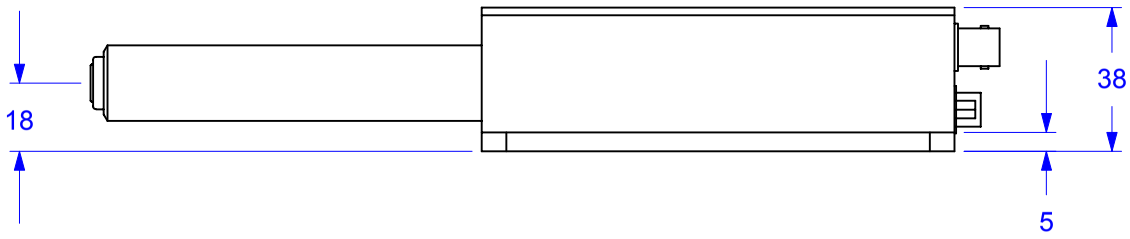

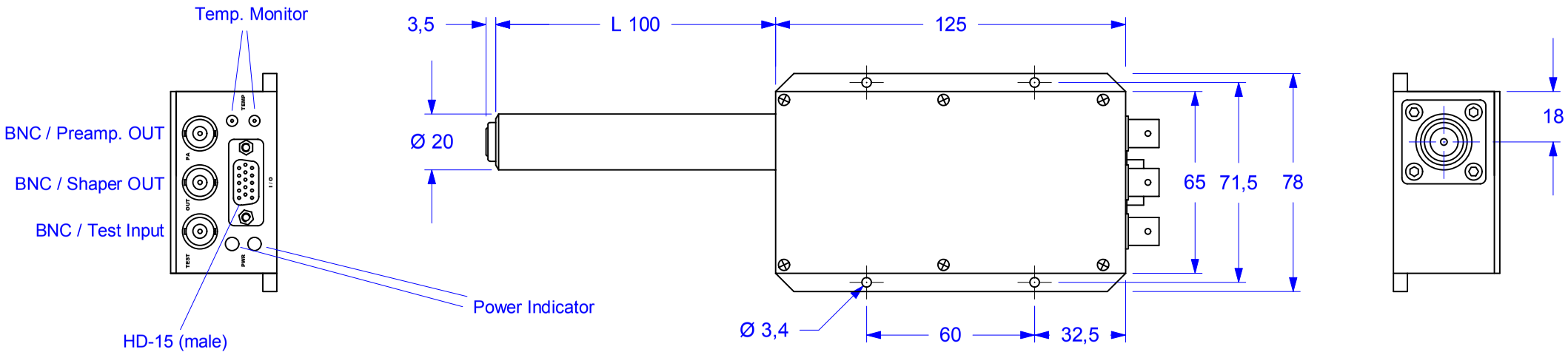

1	2	3	4	5	6	7	8	9	10	11	12	13	14	15
PUR	$\overline{\text{PUR}}$	GND	GND	AMON*	+12V	GND	GND	GND	-12V	SCK*	SDO*	SOT*	ALD*	L5318*

*For KETEK ADC/MCA handshaking.

Connection diagram

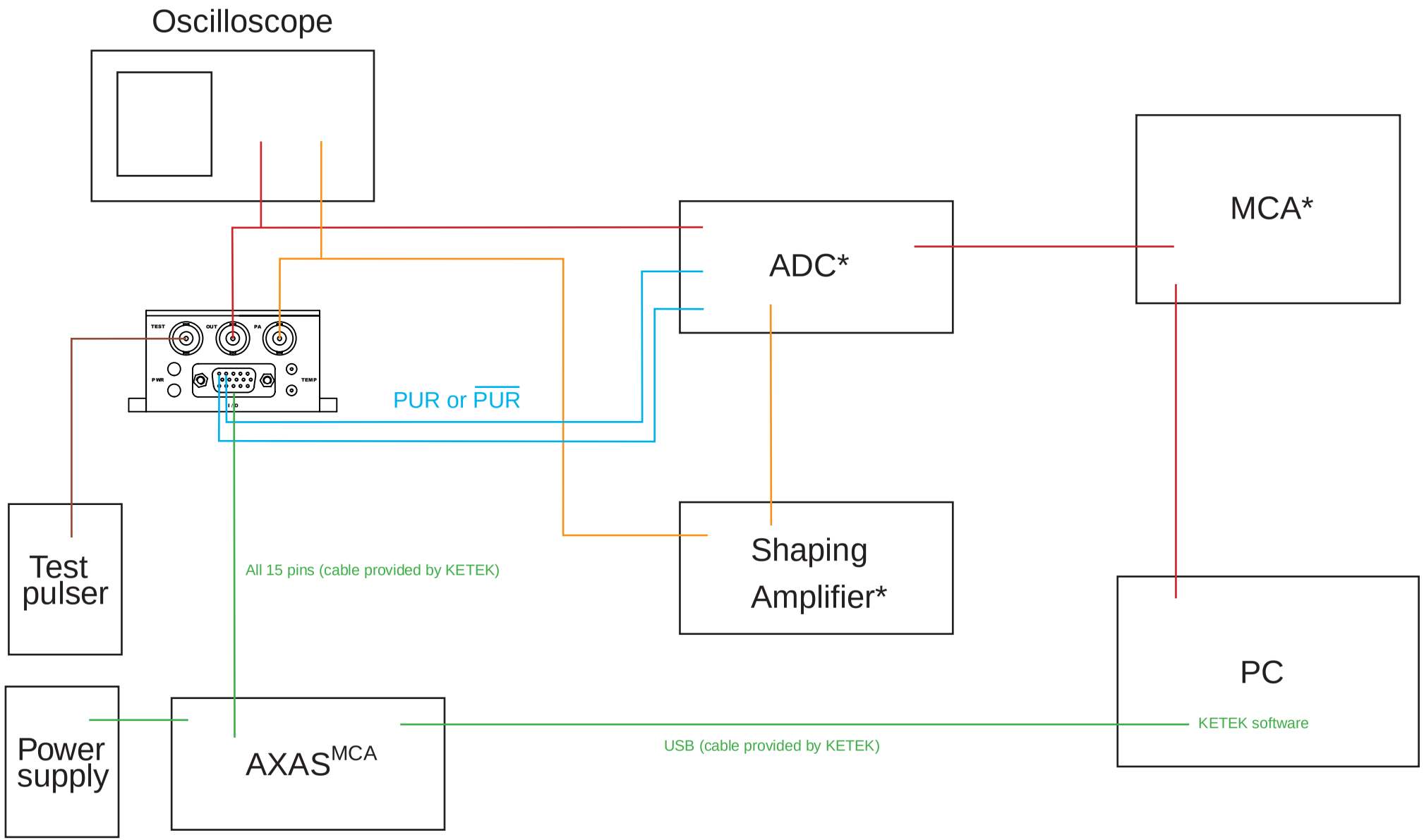

*It is recommended to use Keteks shaping amplifier, which integrated in the AXAS system and KETEKs ADC/MCA AXAS^{MCA}

Example spectrum of a Fe55 radiation source σ(Mn K_α) = 141 eV FWHM

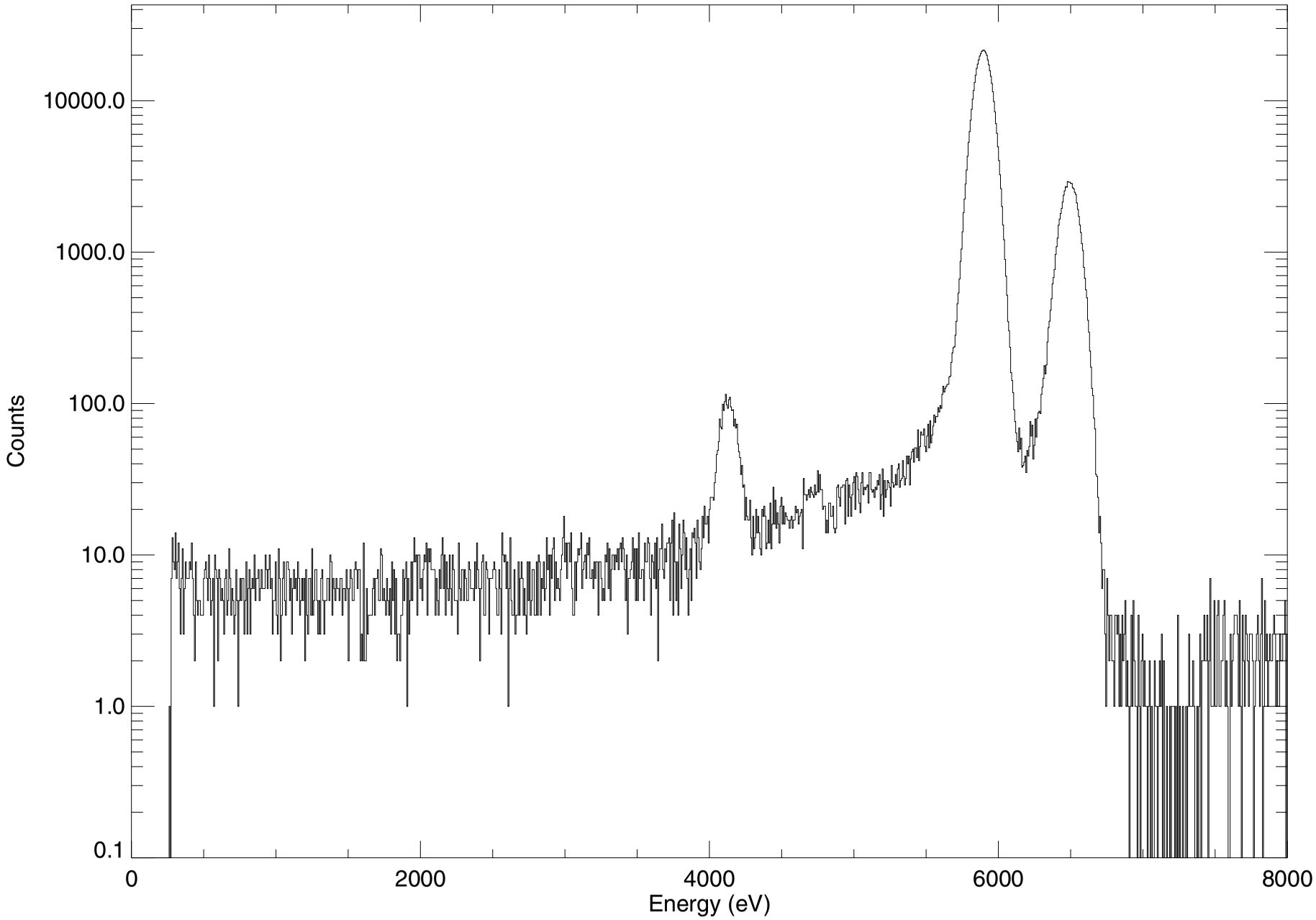

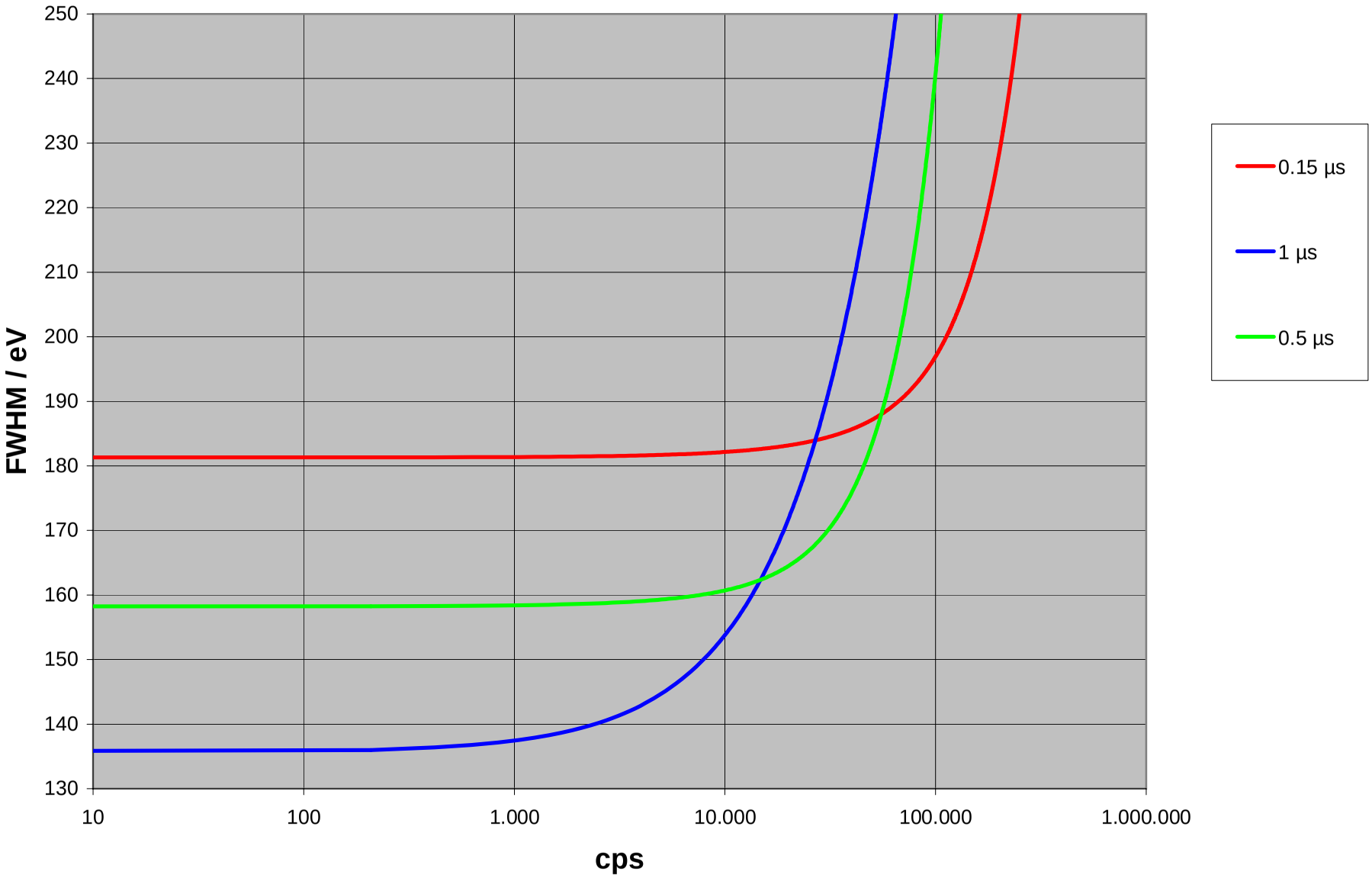
250
240
230
220
210
200
190
180
170
160
150
140
130
FWHM / eV
10
100
1.000
10.000
100.000
1.000.000
cps
0.15 µs
1 µs
0.5 µs

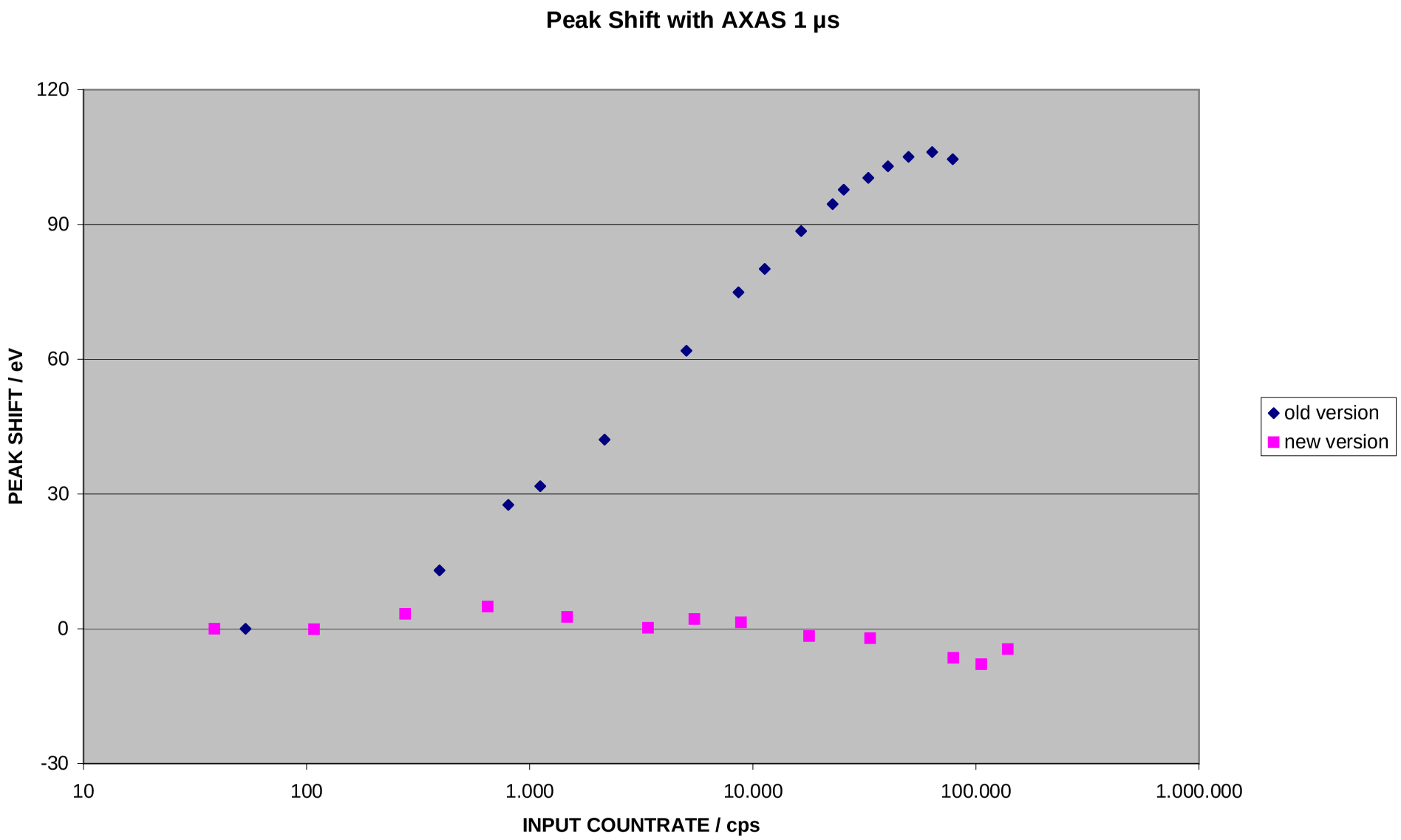
Peak Shift with AXAS 1 µs
120
90
60
30
0
-30
PEAK SHIFT / eV
10
100
1.000
10.000
100.000
1.000.000
INPUT COUNTRATE / cps
old version
new version

typical AXAS output characteristics

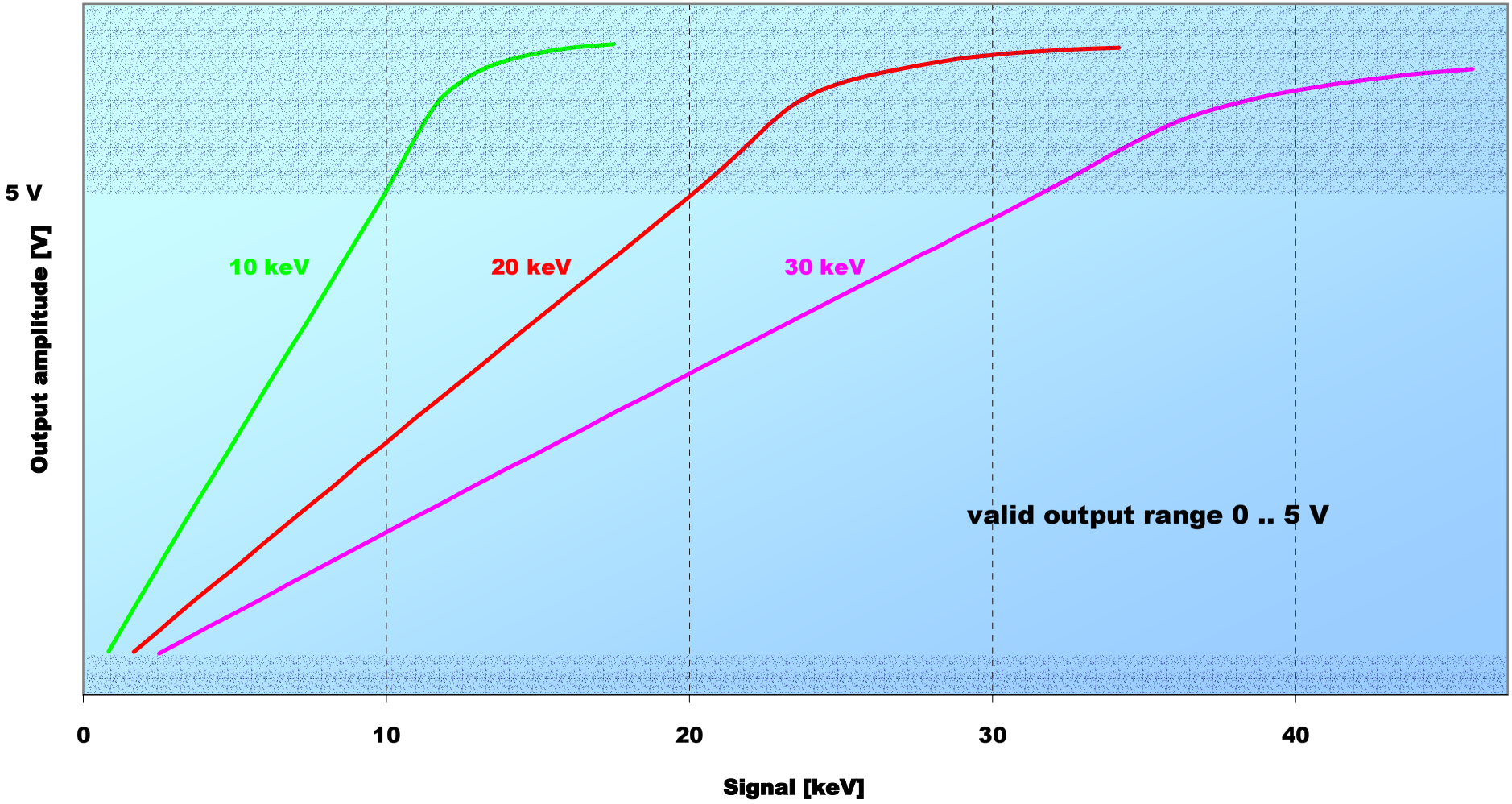

Amplified, shaped output of the AXAS system

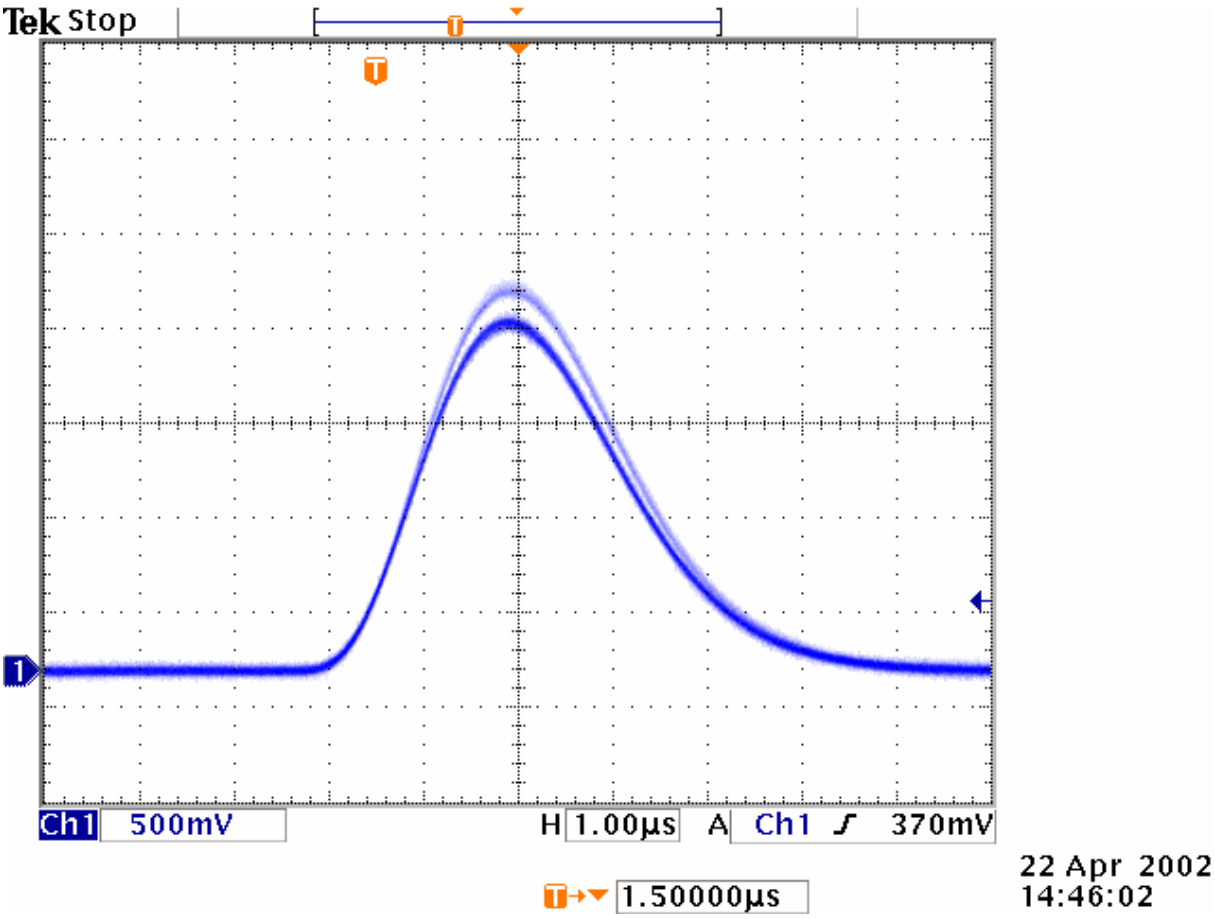

This oscilloscope screen shot shows a typical shaped and amplified output signal of the AXAS system (BNC / Shaper OUT). A Fe^{55} x-ray source was used for irradiation of the detector. The Mn K_α and K_β lines are clearly separated. Please note that the amplitude of the signal depends on the adjusted gain voltage range and the x-ray energy.

Double pulse and PUR TTL pulse

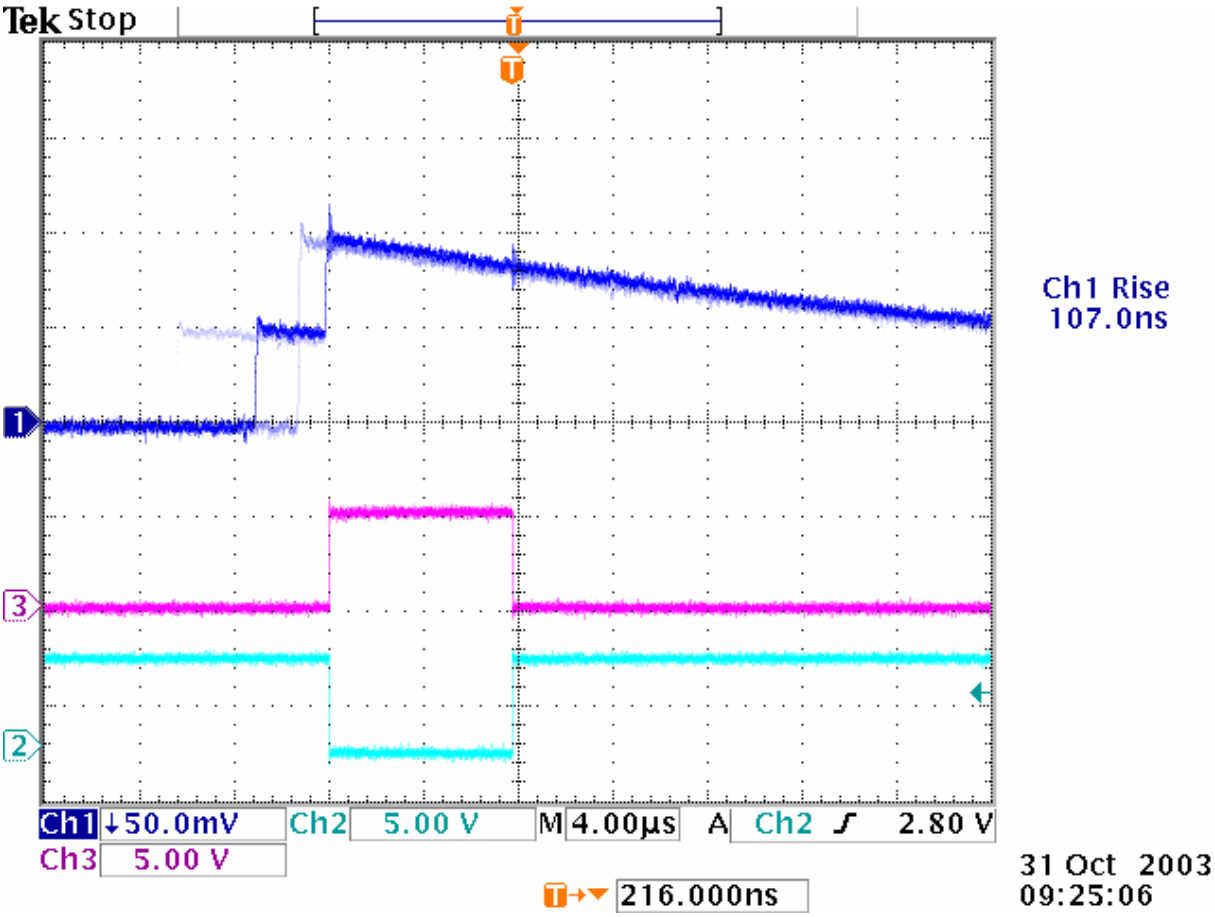

This screen shot shows a typical double (pile up) pulse (upper curve) and the subsequent TTL pulses produced by the AXAS system (lower curves) as input to an optional pile up rejection feature of your ADC. The pink curve shows the PUR, the blue curve the respective inverse PUR (the contact is denoted as PUR with a line above the letters) signal. Please note, that the original output is inverted with respect to this picture.

Fall time of the pre-amplified signal

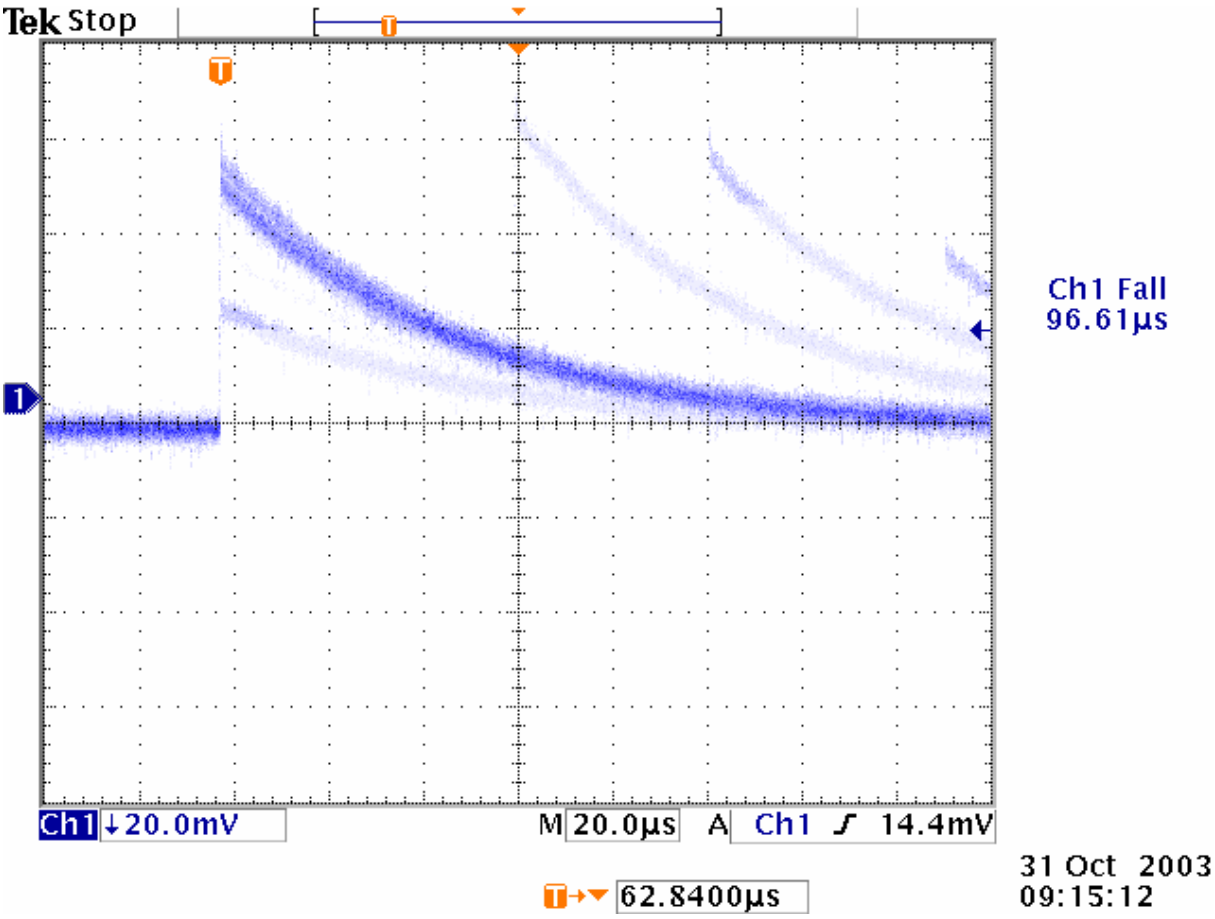

This picture shows the typical fall time (96.61 µs in this case) of a pre-amplified signal (BNC / Preamp. OUT). Again a Fe^{55} x-ray source was used to irradiate the detector. Please note that the amplitude and the total fall time of the signal depend on the x-ray energy and that the original output is inverted with respect to this picture.

Rise time of the pre-amplified signal

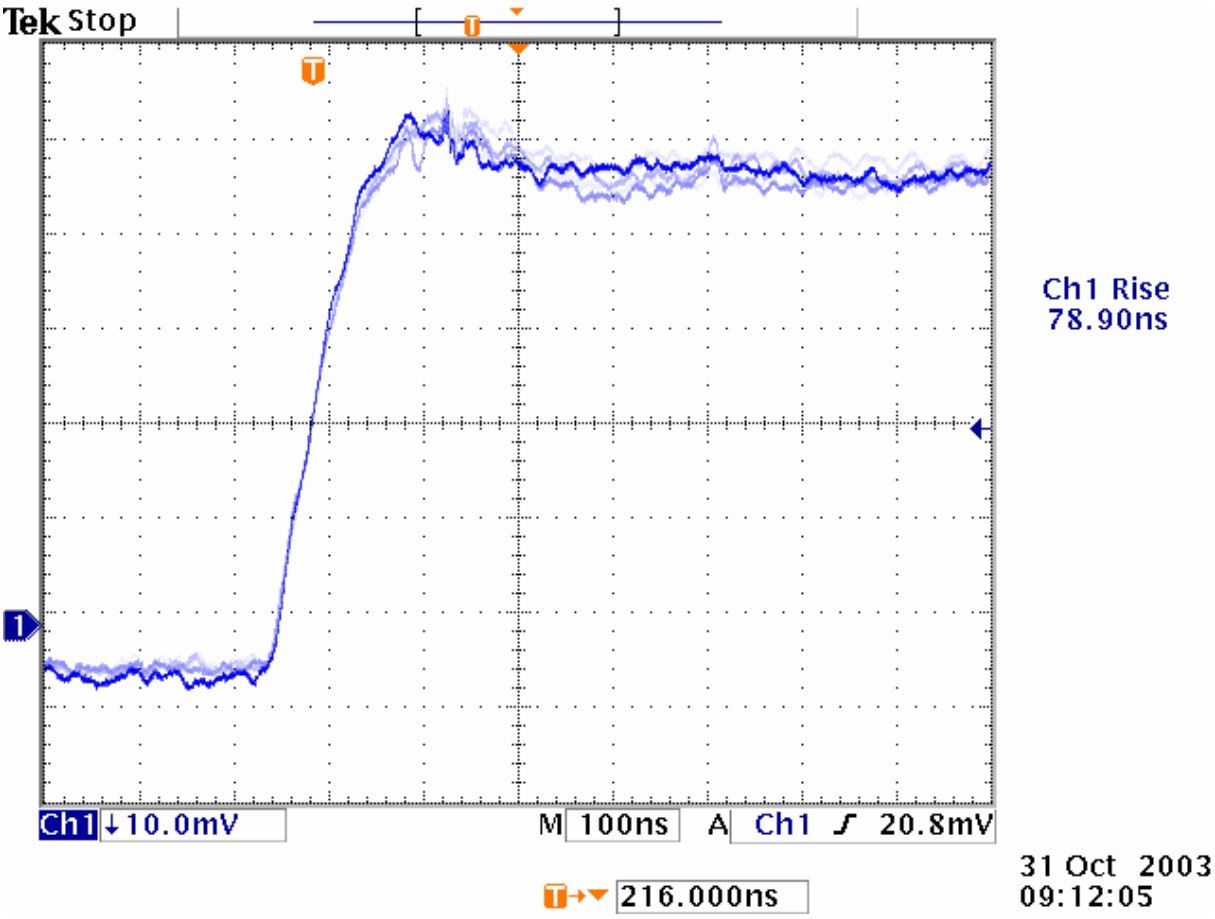

This picture shows the typical rise time (78.90 ns in this case) of a pre-amplified signal (BNC / Preamp. OUT). Again a Fe^{55} x-ray source was used to irradiate the detector. Please note that the amplitude and the total rise time of the signal depend on the x-ray energy and that the original output is inverted with respect to this picture.

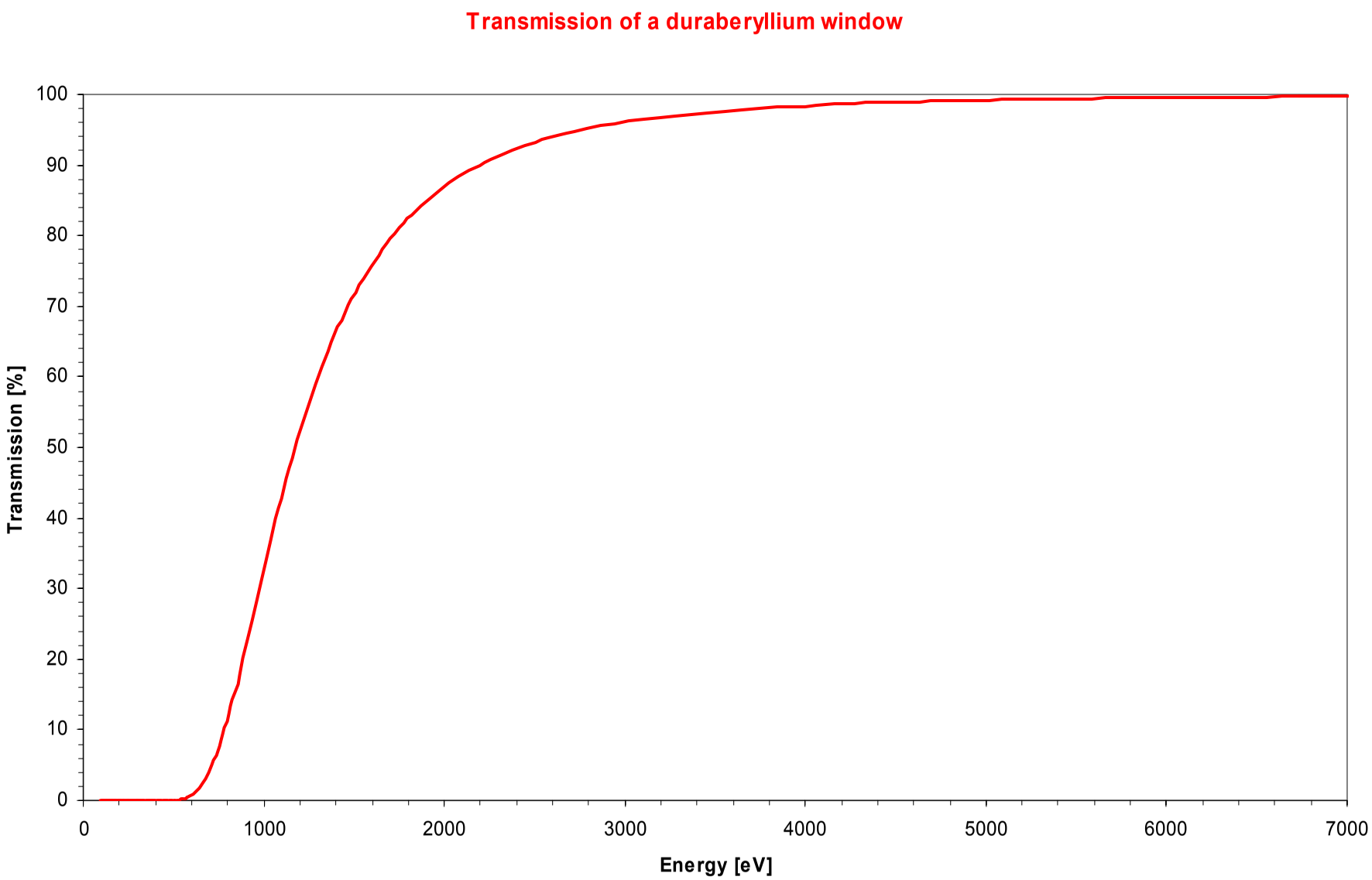
Transmission of a duraberyllium window
Transmission [%]
100
90
80
70
60
50
40
30
20
10
0
0
1000
2000
3000
4000
5000
6000
7000
Energy [eV]

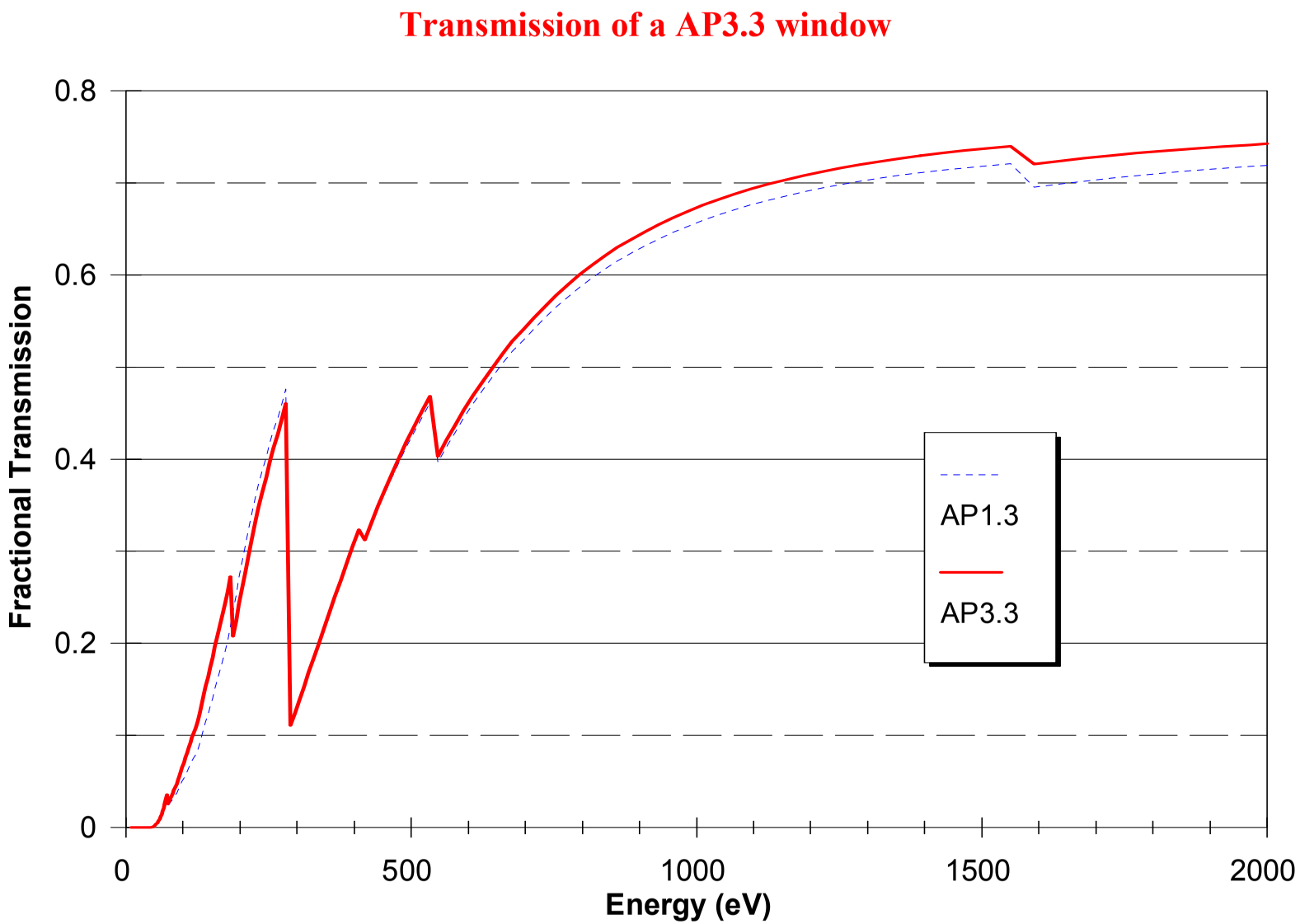
Transmission of a AP3.3 window
0.8
0.6
0.4
0.2
0
Fractional Transmission
0
500
1000
1500
2000
Energy (eV)
AP1.3
AP3.3

Atomic Mass

Atomic Number →
Element →
Line*, Energy (keV) →

21	44.96	Sc
Kα	4.091	
Kβ	4.461	
Lα	0.395	

KETEK

Creative Detector Solutions

1	1.008																2 4.003
	H																He
3	6.941	4	9.012									5	10.81	6	12.01	7	14.01	8	16.00	9	19.00	10	20.18
Li		Be										B		C		N		O		F		Ne	
Kα	0.054	Kα	0.109									Kα	0.183	Kα	0.277	Kα	0.392	Kα	0.525	Kα	0.677	Kα	0.849
11	22.99	12	24.31									13	26.98	14	28.09	15	30.97	16	32.07	17	35.45	18	39.95
Na		Mg										Al		Si		P		S		Cl		Ar	
Kα	1.041	Kα	1.254									Kα	1.487	Kα	1.740	Kα	2.014	Kα	2.308	Kα	2.622	Kα	2.958
														Kβ	1.836	Kβ	2.139	Kβ	2.464	Kβ	2.816	Kβ	3.191
19	39.10	20	40.08	21	44.96	22	47.87	23	50.94	24	52.00	25	54.94	26	55.85	27	58.93	28	58.69	29	63.55	30	65.41	31	69.72	32	72.64	33	74.92	34	78.96	35	79.90	36	83.80
K		Ca		Sc		Ti		V		Cr		Mn		Fe		Co		Ni		Cu		Zn		Ga		Ge		As		Se		Br		Kr	
Kα	3.314	Kα	3.692	Kα	4.091	Kα	4.511	Kα	4.952	Kα	5.415	Kα	5.899	Kα	6.404	Kα	6.930	Kα	7.478	Kα	8.048	Kα	8.639	Kα	9.252	Kα	9.886	Kα	10.54	Kα	11.22	Kα	11.92	Kα	12.65
Kβ	3.590	Kβ	4.013	Kβ	4.461	Kβ	4.932	Kβ	5.427	Kβ	5.947	Kβ	6.490	Kβ	7.058	Kβ	7.649	Kβ	8.265	Kβ	8.905	Kβ	9.572	Kβ	10.26	Kβ	10.98	Kβ	11.73	Kβ	12.50	Kβ	13.29	Kβ	14.11
		Lα	0.341	Lα	0.395	Lα	0.452	Lα	0.511	Lα	0.573	Lα	0.637	Lα	0.705	Lα	0.776	Lα	0.852	Lα	0.930	Lα	1.012	Lα	1.098	Lα	1.188	Lα	1.282	Lα	1.379	Lα	1.480	Lα	1.586
37	85.47	38	87.62	39	88.91	40	91.22	41	92.91	42	95.94	43	(98)	44	101.1	45	102.9	46	106.4	47	107.9	48	112.4	49	114.8	50	118.7	51	121.8	52	127.6	53	126.9	54	131.3
Rb		Sr		Y		Zr		Nb		Mo		Tc		Ru		Rh		Pd		Ag		Cd		In		Sn		Sb		Te		I		Xe	
Kα	13.40	Kα	14.17	Kα	14.96	Kα	15.78	Kα	16.62	Kα	17.48	Kα	18.37	Kα	19.28	Kα	20.22	Kα	21.18	Kα	22.16	Kα	23.17	Kα	24.21	Kα	25.27	Kα	26.36	Kα	27.47	Kα	28.61	Kα	29.78
Kβ	14.96	Kβ	15.84	Kβ	16.74	Kβ	17.67	Kβ	18.62	Kβ	19.61	Kβ	20.62	Kβ	21.66	Kβ	22.72	Kβ	23.82	Kβ	24.94	Kβ	26.10	Kβ	27.28	Kβ	28.47	Kβ	29.73	Kβ	31.00	Kβ	32.29	Kβ	33.62
Lα	1.694	Lα	1.807	Lα	1.923	Lα	2.042	Lα	2.166	Lα	2.293	Lα	2.424	Lα	2.559	Lα	2.697	Lα	2.839	Lα	2.984	Lα	3.134	Lα	3.287	Lα	3.444	Lα	3.605	Lα	3.769	Lα	3.938	Lα	4.110
						Lβ	2.124	Lβ	2.257	Lβ	2.395	Lβ	2.538	Lβ	2.683	Lβ	2.834	Lβ	2.990	Lβ	3.151	Lβ	3.317	Lβ	3.487	Lβ	3.663	Lβ	3.844	Lβ	4.030	Lβ	4.221	Lβ	4.423
55	132.9	56	137.3	57	138.9	72	178.5	73	180.9	74	183.8	75	186.2	76	190.2	77	192.2	78	195.1	79	197.0	80	200.6	81	204.4	82	207.2	83	209.0	84	(209)	85	(210)	86	(222)
Cs		Ba		La		Hf		Ta		W		Re		Os		Ir		Pt		Au		Hg		Tl		Pb		Bi		Po		At		Rn	
Kα	30.97	Kα	32.19	Kα	33.44	Lα	7.899	Lα	8.146	Lα	8.398	Lα	8.653	Lα	8.912	Lα	9.175	Lα	9.442	Lα	9.713	Lα	9.989	Lα	10.27	Lα	10.55	Lα	10.84	Lα	11.13	Lα	11.43	Lα	11.73
Kβ	34.97	Kβ	36.38	Kβ	37.80	Lβ	9.023	Lβ	9.343	Lβ	9.672	Lβ	10.01	Lβ	10.36	Lβ	10.71	Lβ	11.07	Lβ	11.44	Lβ	11.82	Lβ	12.21	Lβ	12.61	Lβ	13.02	Lβ	13.45	Lβ	13.88	Lβ	14.32
Lα	4.287	Lα	4.466	Lα	4.651	Mα	1.645	Mα	1.710	Mα	1.775	Mα	1.843	Mα	1.910	Mα	1.980	Mα	2.051	Mα	2.123	Mα	2.195	Mα	2.271	Mα	2.346	Mα	2.423	Mα	2.502	Mα	2.581	Mα	2.662
Lβ	4.620	Lβ	4.828	Lβ	5.042																														
87	(223)	88	(226)	89	(227)	104	(261)	105	(262)	106	(266)	107	(264)	108	(269)	109	(268)																		
Fr		Ra		Ac		Rf		Db		Sg		Bh		Hs		Mt																			
Lα	12.03	Lα	12.34	Lα	12.65																														
Lβ	14.77	Lβ	15.24	Lβ	15.71																														
Mα	2.743	Mα	2.825	Mα	2.910																														

Actinides	58 140.1 Ce	59 140.9 Pr	60 144.2 Nd	61 (145) Pm	62 150.4 Sm	63 152.0 Eu	64 157.3 Gd	65 158.9 Tb	66 162.5 Dy	67 164.9 Ho	68 167.3 Er	69 168.9 Tm	70 173.0 Yb	71 175.0 Lu
	Lα 4.840	Lα 5.034	Lα 5.230	Lα 5.433	Lα 5.636	Lα 5.846	Lα 6.057	Lα 6.273	Lα 6.495	Lα 6.720	Lα 6.949	Lα 7.180	Lα 7.416	Lα 7.656
	Lβ 5.262	Lβ 5.489	Lβ 5.722	Lβ 5.961	Lβ 6.205	Lβ 6.456	Lβ 6.713	Lβ 6.978	Lβ 7.248	Lβ 7.525	Lβ 7.811	Lβ 8.101	Lβ 8.402	Lβ 8.709
	Mα 0.883	Mα 0.929	Mα 0.978	Mα 1.029	Mα 1.081	Mα 1.131	Mα 1.185	Mα 1.240	Mα 1.293	Mα 1.348	Mα 1.406	Mα 1.462	Mα 1.521	Mα 1.581
Lanthanides	90 232.0 Th	91 231.0 Pa	92 238.0 U	93 (237) Np	94 (244) Pu	95 (243) Am	96 (247) Cm	97 (247) Bk	98 (251) Cf	99 (252) Es	100 (257) Fm	101 (258) Md	102 (259) No	103 (262) Lr
	Lα 12.97	Lα 13.29	Lα 13.61	Lα 13.94	Lα 14.62	Lα 14.62	Lα 14.96	Lα 15.31	Lα 15.66	Lα 16.02	Lα 16.38			
	Lβ 16.20	Lβ 16.70	Lβ 17.22	Lβ 17.75	Lβ 18.85	Lβ 18.85	Lβ 19.43	Lβ 20.02	Lβ 20.56	Lβ 21.17	Lβ 21.78			
	Mα 2.996	Mα 3.082	Mα 3.171	Mα 3.260	Mα 3.351	Mα 3.443	Mα 3.537	Mα 3.632	Mα 3.727	Mα 3.824	Mα 3.923			

*Quoted are the Kα1, Kβ1, Lα1, etc. energies. The observed energies may/will slightly vary because of (not resolved) α2, β2, etc. contributions.