ESRF | The European Synchrotron

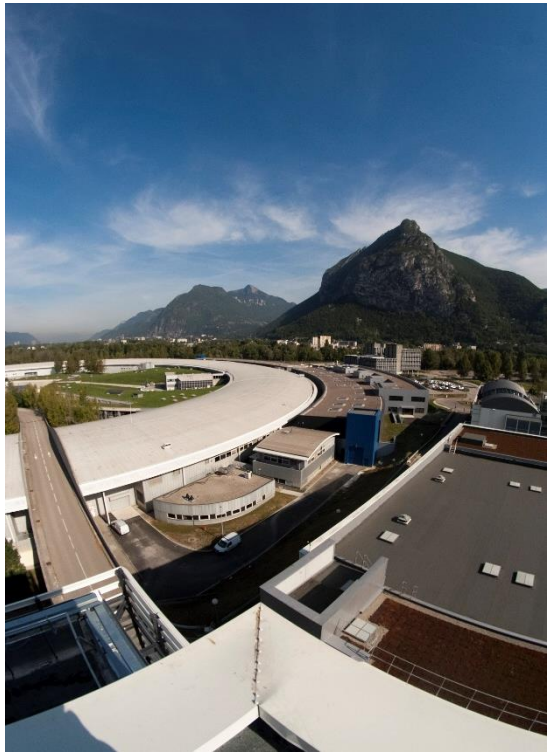

Precision and Stability Issues for X-ray Optics Systems

R.Barrett
X-ray Optics Group
ESRF

ACKNOWLEDGEMENTS

R. Baker, A. Chumakov, C. Clavel, P. Cloetens, Y. Dabin, C. Detlefs, L. Eybert, P. Glatzel, J. Gregoire, H. Gonzalez, J. Guillemin, B. Lantelme, M. Lesourd, p. van der Linden, T. Mairs, G. Malandrino, T. Manning, T. Marchial, P. Marion, K. Martel, O. Mathon, M. Mattenet, C. Morawe, A. Rogalev, m. Salome, J. Susini, R. Tucoulou, F. Villar, H-P. van der Kleij, A. Vivo, L. Zhang + others

Integrated engineering approach involving beamline scientists, engineers and technicians…

PRECISION & STABILITY - NIK WALLENDA: 2 NOVEMBER 2014 CHICAGO

Highest Incline Tightrope Walk and Highest Blindfolded Tightrope Walk

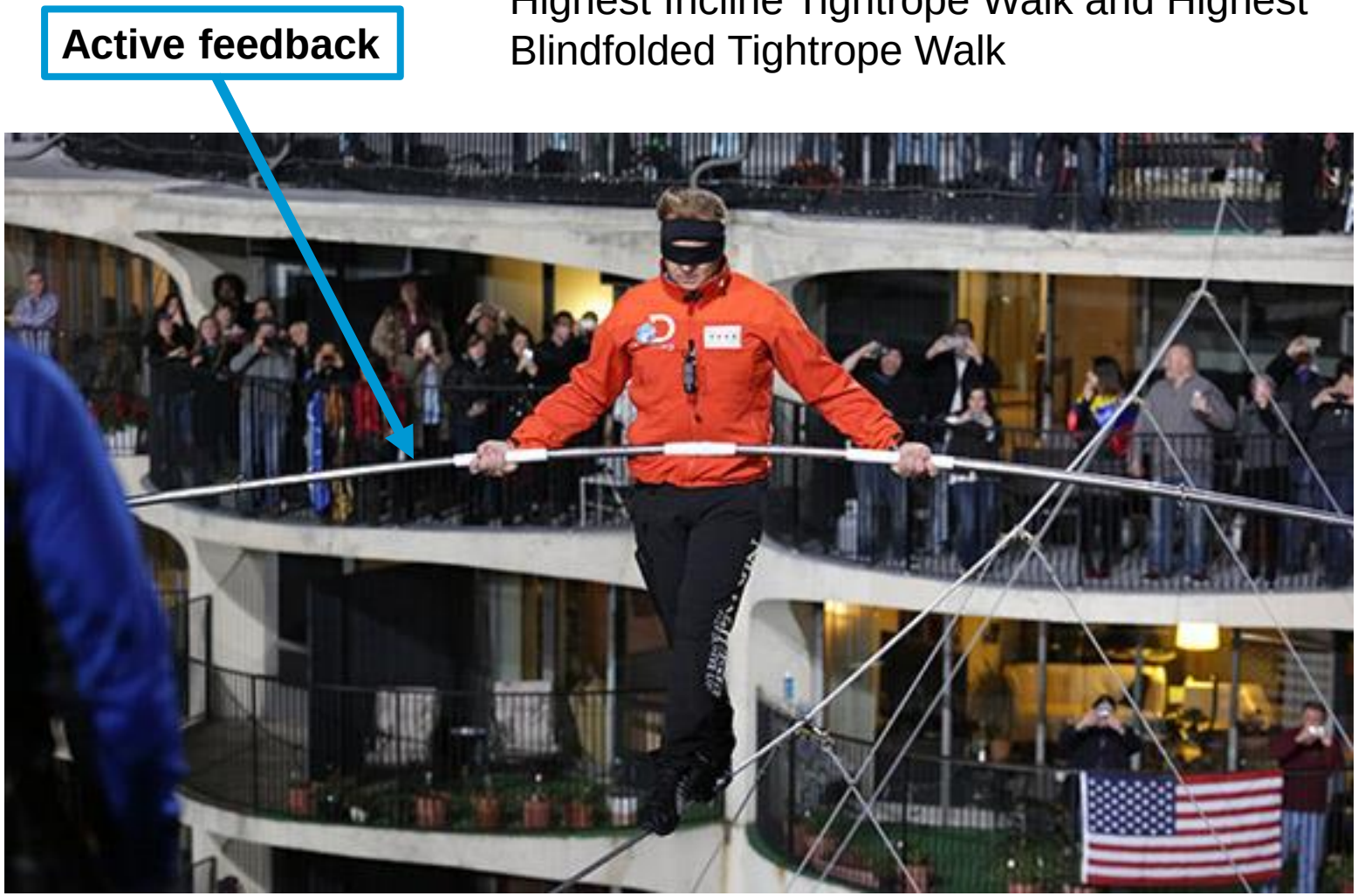

OUTLINE

- **Setting the scene**
  - What are we aiming for?
  - Some orders of magnitude
- **Mirror systems**
- **Double Crystal Monochromators**

SOME FUNDAMENTAL ISSUES FOR X-RAY OPTICAL SYSTEM PERFORMANCE

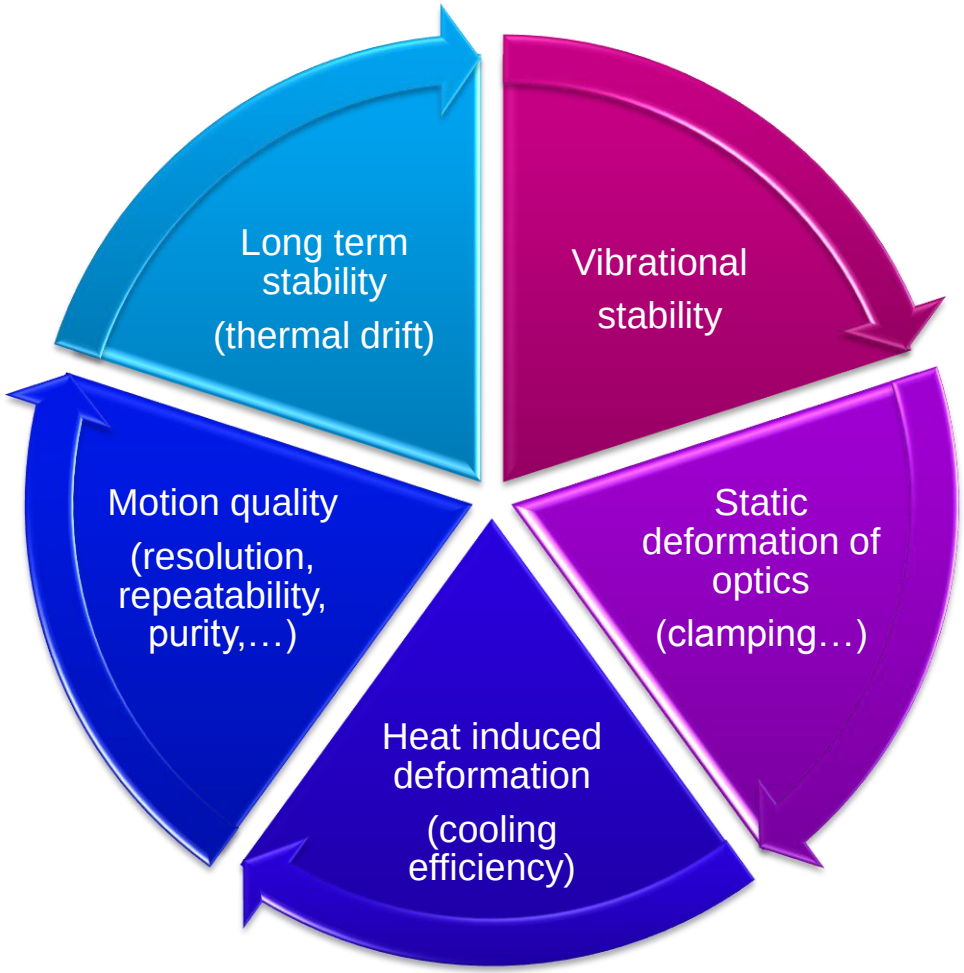

AIMS:

Opto-mechanical systems that,

… go where we want…

… when we want …

… at the speed we want …

… and stay there …

… delivering the best optical performance…

… regardless of what we throw at them!

EFFECTS OF UNSTABLE (IMPRECISELY MOVED) OPTICS

Translational (error) movements

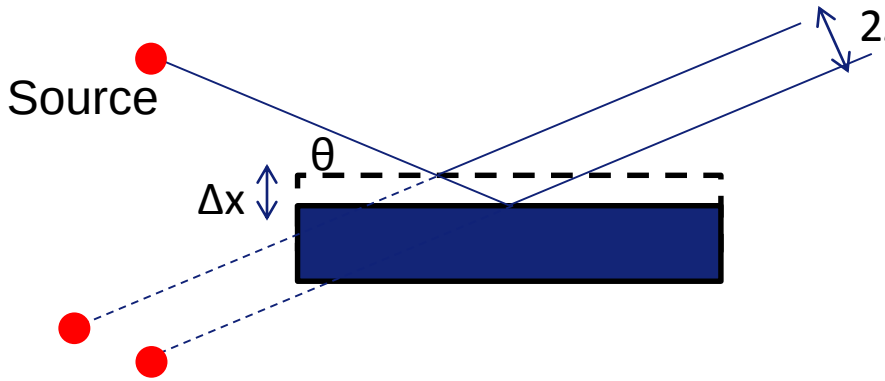

translations ≡ source movement

- **static systems** movements due to vibrations usually levels < source size. long term drift may be more problematic
- **dynamic systems** e.g. crystal offset in scanning DCM – may be more difficult

Angular (error) movements

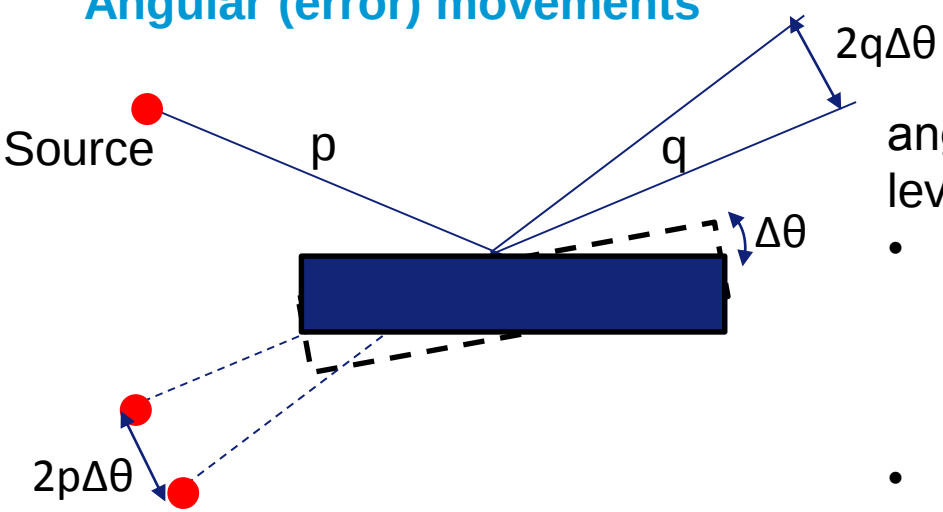

angles ≡ source movement (amplified by lever arm)

- Due to long lever arms at SR sources usually dominant cause of beam/effective source movement for both **static** and **dynamic systems**
- Energy shift for diffractive optics

Non-reflective optics similar but angular amplification is 2x less

IMPACT

What we see depends upon observation time, t:

- **t < characteristic motion period:**
  - beam movements (focused or unfocused)
  - intensity fluctuations
- **t > characteristic motion period:**
  - effective increase in source size ➔ $\sigma_{eff}=\sqrt{(\sigma^2 + 2p\Delta\theta^2)}$ – normally distributed
  - focus blurring
  - decrease of transverse coherence
  - loss of intensity

For angular instabilities aim for effective source size increase < 10%

e.g. Single mirror at 30m from low-β source (10keV):

ESRF 1996: σ_v= 11µm: $\Delta\theta_{rms}$ < 80 nrad

σ_h= 58µm: $\Delta\theta_{rms}$ < 440 nrad

ESRF 2014: σ_v= 4.3µm: $\Delta\theta_{rms}$ < 32 nrad

σ_h= 49µm: $\Delta\theta_{rms}$ < 370 nrad

HOW TO GET BY…

Even in 1996 we needed 80 nrad angular stability – how did we survive?

- Optical quality and diversity much less developed (mirrors ~5µrad rms slope errors, high energy zone plates had lower resolutions, no refractive lenses)
- Cooling technologies less well developed
- Vibrations/drifts at this level were secondary concerns
- Use horizontally deflecting mirrors (also helped for heat-load deformation) preferably double reflection on common support
- Put the optic closer to the source. ESRF limit is ~ 30m + increased power density. Not possible for micro/nanofocusing optics – place on common support with sample.
- Use secondary source after (most) unstable optics
- Replace (some) double crystal monochromators with channel cut crystals

For ESRF Phase II upgrade change to Hybrid MBA lattice:

ESRF Phase II: $\sigma_v = 3.8$ µm: $\Delta\theta_{rms} < 29$ nrad

$\sigma_h = 25$ µm: $\Delta\theta_{rms} < 190$ nrad

THE SITUATION TODAY

- **Current mirror polishing quality:** slope errors < 100 nrad rms
- **Crystal polishing:** energy resolutions ~0.5 meV (➔ rocking curve < 85 nrad rms)
- **ESRF phase I upgrade:** opportunity and need to improve the precision & stability of our optomechanical systems to capitalise on improvements of underlying optical quality

Generic Approach

- Lower ambient vibration levels: improved slab in new experimental halls
- Improved temperature stability of optical and experimental hutches (long term drifts)
- Stiffer, lighter mechanics – improved vibration immunity
- Improved mirror mounting and cooling
- Precise rotation stages – capable of feedback correction at up to 10 Hz
- Management of beam-induced thermal load for rapid equilibration and low drift

BELLEDONNE EX2_SLAB NEAR ID31/32

Testing vibration sensitivity with a vacuum pump: (NXDS 15 m^3/h): *courtesy Y.Dabin, M. Lesourd*

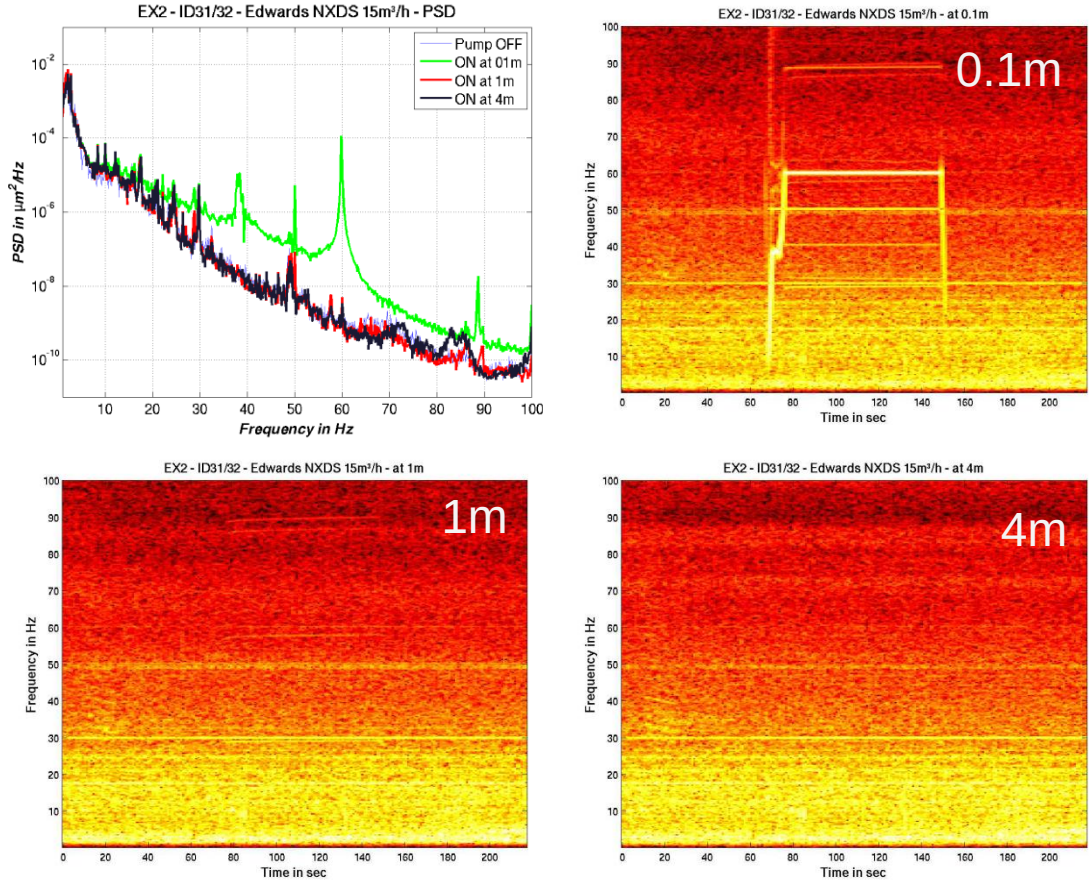

Peak to peak displacement [µm] : D_{pp} OFF = 0.42, D_{pp} at 0.1m =0.57 D_{pp} at 1m = 0.59, D_{pp} at 4m = 0.51

Top left: vertical PSD, top right, bottom right and bottom left: vertical spectrograms taken at 0.1m, 1m and 4m respectively.

OPTIMISATION OF HUTCH TEMPERATURE STABILITY

Modelled temperature profile in hutch: *courtesy R. Baker*

Before

After

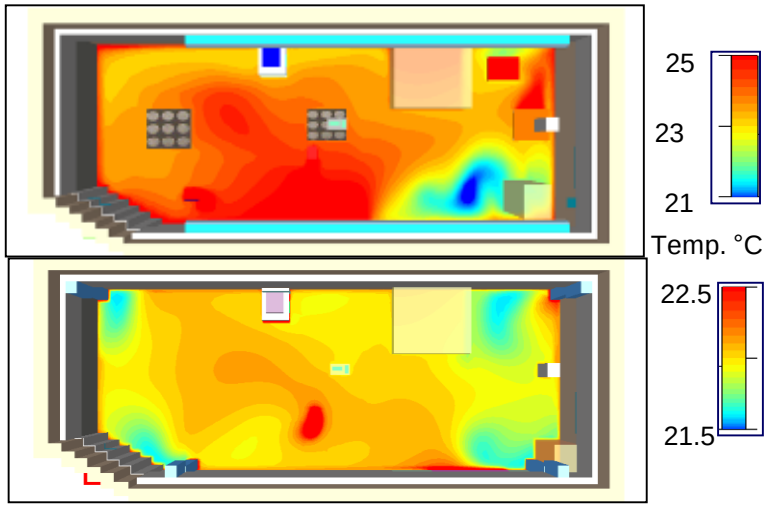

Spatial gradient improved from degrees to tenths of a degree

- Chicane losses limited to 10% of total throughput.
- Air in through single central porous sleeve.
- Textile membrane below central sleeve.
- 4 air extraction ducts, 1 in each corner.
- All walls and roof insulated with 50mm Rockwool (except porch door & floor).
- Specific extraction hood for electronics rack.
- Temperature regulation in porch 22.2 ± 0.2°C.
- Air inlet temperature simulated regulation 21.75 +/- 0.06°C.

Hutch Model

Summary

Configuration		*Max temp. gradient at sample*	*Max overall temp. gradient*	*EXPH temp / Hutch temp*
		°C		*Ratio*
Existing		0.67	5	3
1	Optimised ventilation & insulation	0.09	0.7	22
2	Specific extraction for electronics rack	0.12	0.6	18
3	Temp profile porch & simulated regulation	0.01	0.4	200 ?
4	Removal of insulation	0.46	3	4

TEMPERATURE STABILITY RECORDED OVER 72 HOURS

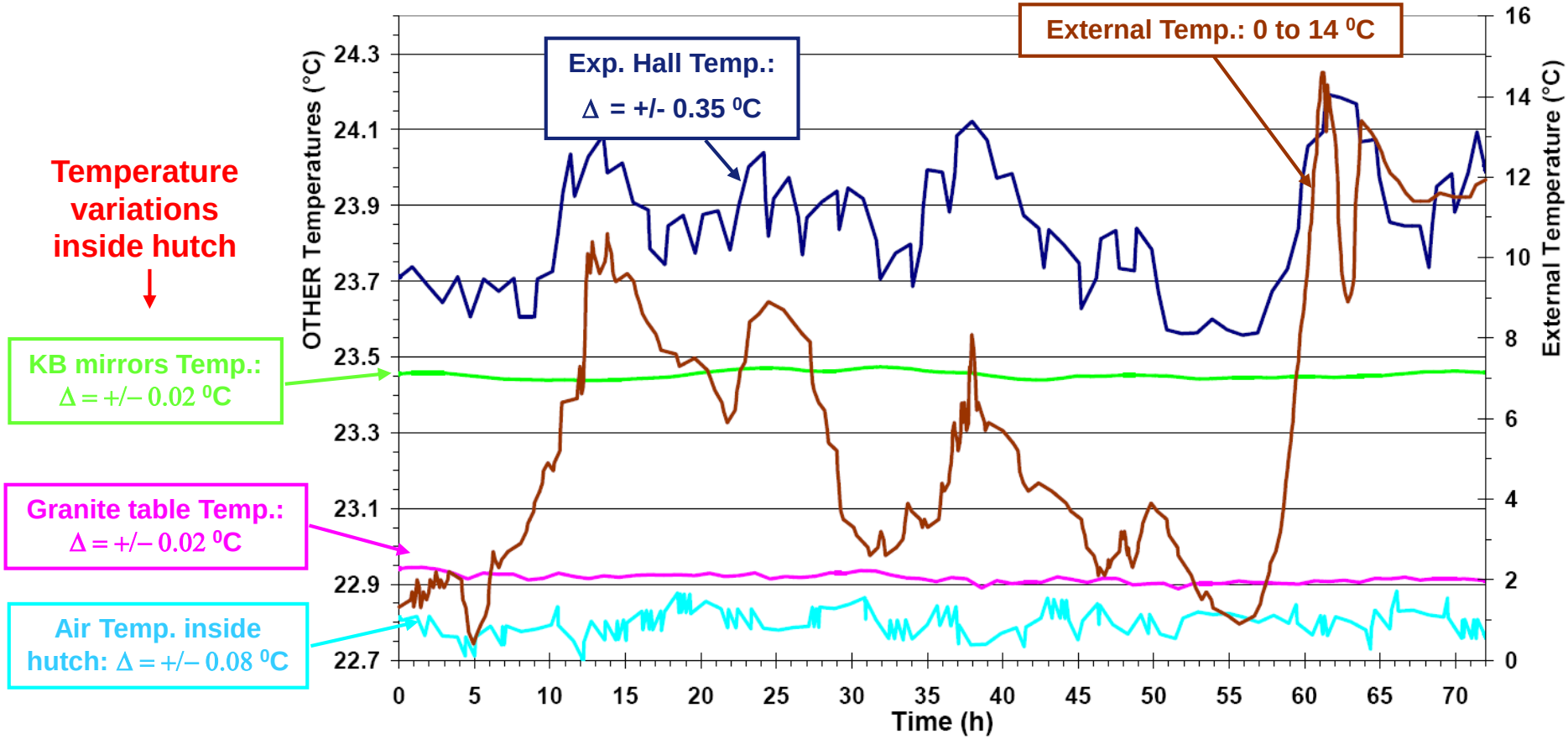

Courtesy R. Baker

MIRROR MOUNTING

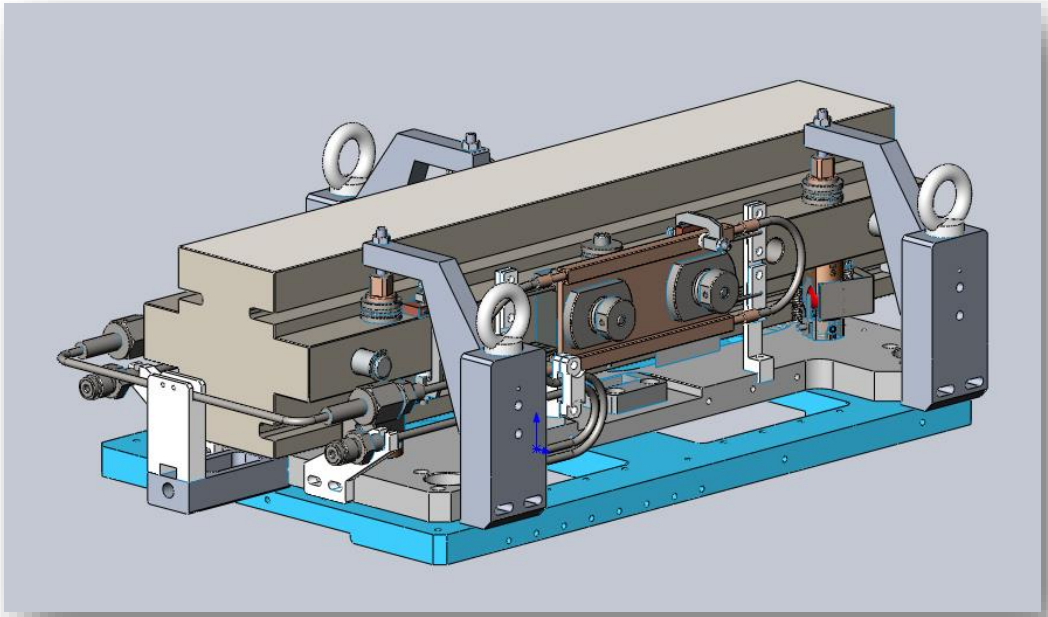

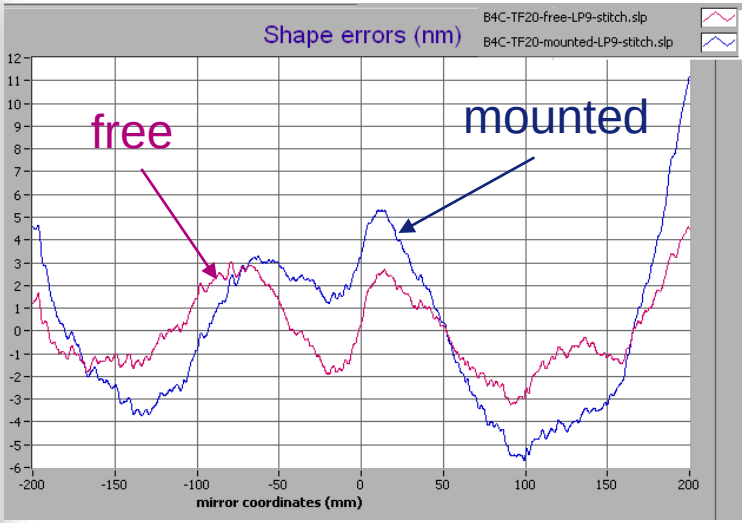

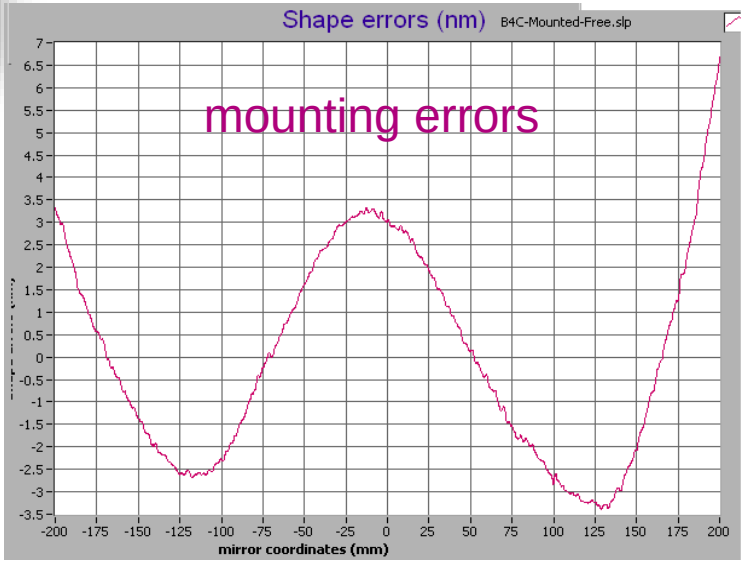

Cryogenically cooled pre-mirror UPBL7

Free mirror: 180 nrad rms

Mounted mirror: 200 nrad rms

(induced mounting errors ~ 90 nrad rms

ESRF GENERIC MIRROR SYSTEM

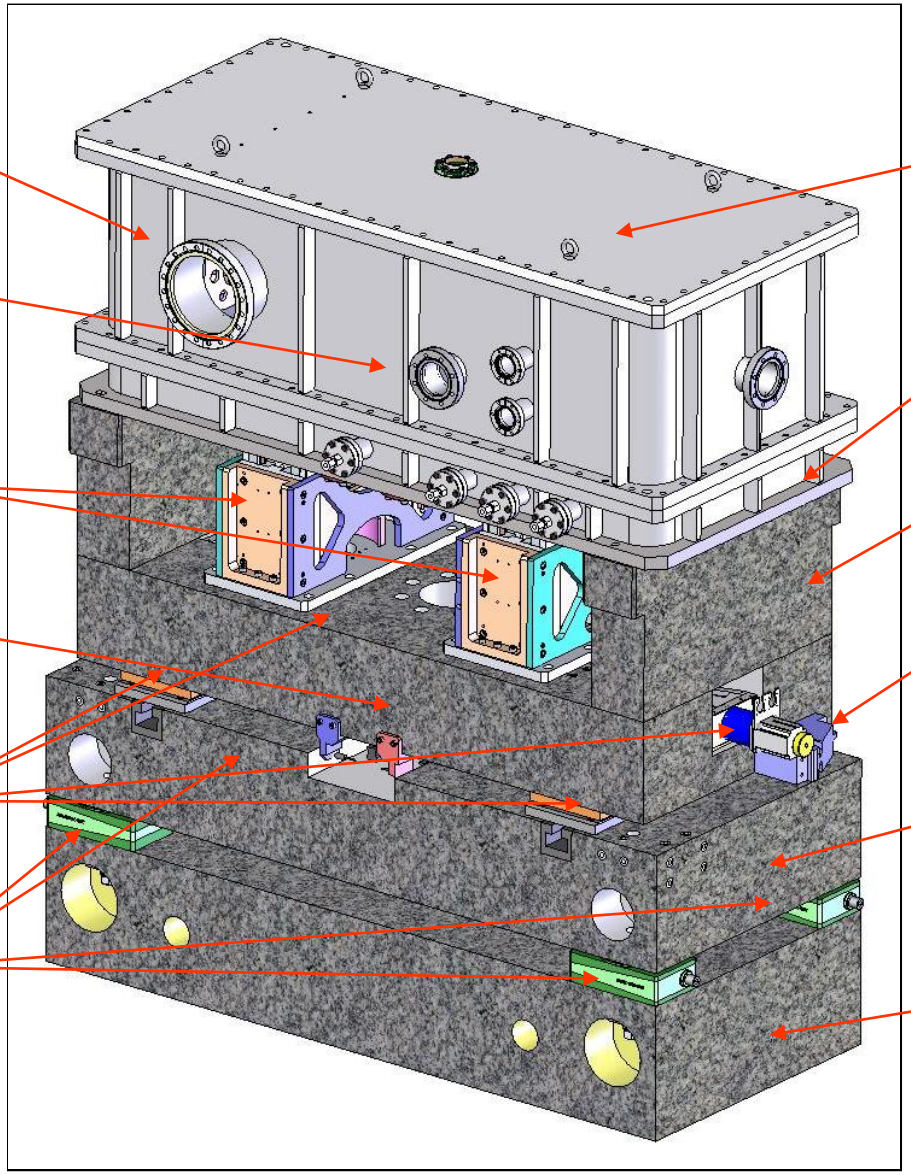

Courtesy R. Baker

ID16A WHITE BEAM MULTILAYER MONOCHROMATOR

Horizontally deflecting single-bounce focusing monochromator (17 and 34 keV)

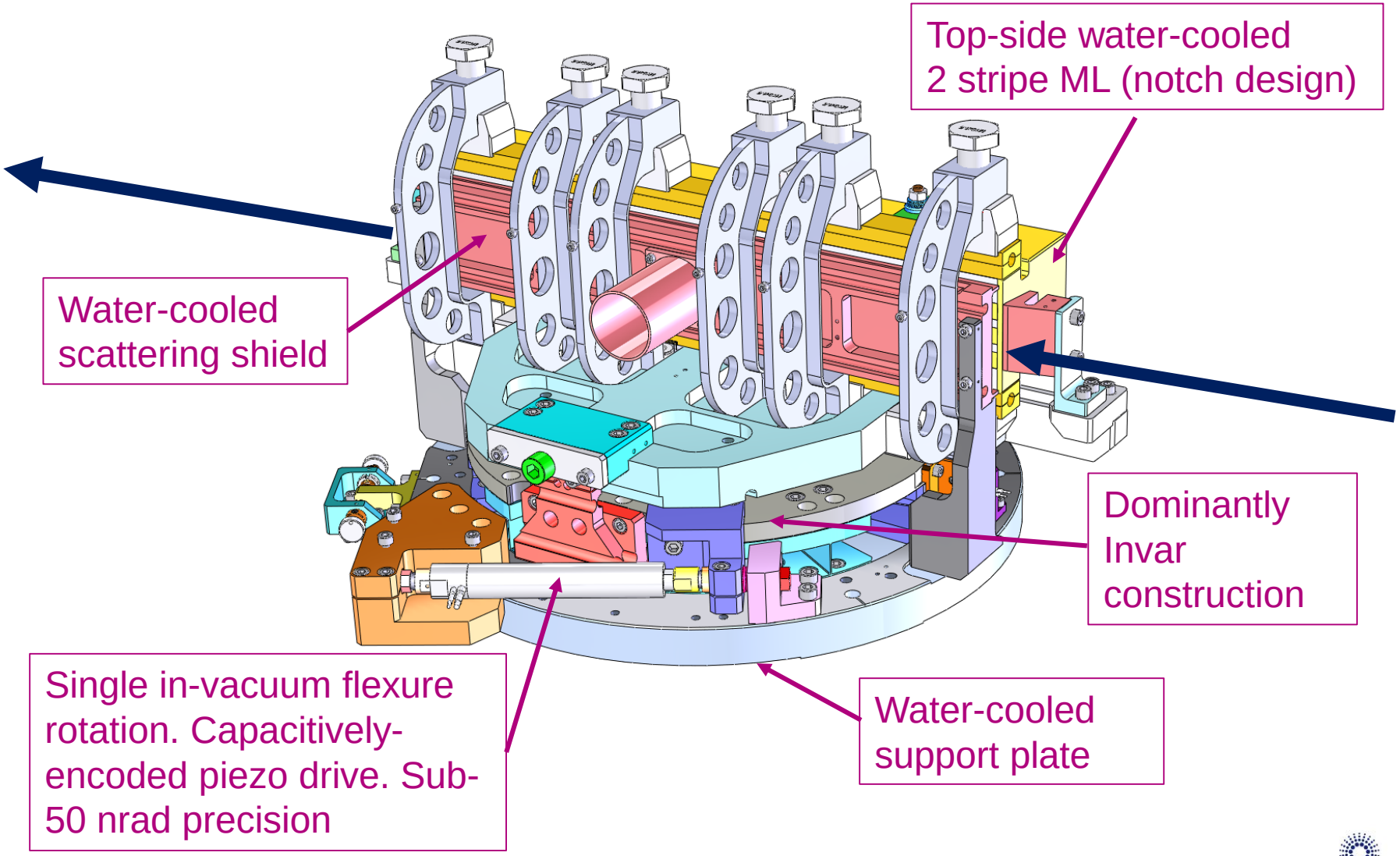

Motivations

Obsolescence

Ageing

A large number of ESRF beamlines (ID12, ID21, ID16(ID20) ID22(ID16), BM23, ID26) dedicated to spectroscopy are equipped with a similar model of monochromator. This model, a double crystal double cam monochromator from Kohzu corporation, has been conceived more than twenty years ago. They have been acquired by ESRF in 3 steps, ID12 and BM23 in 1993 (specified), ID26 and ID16 in 1995 and ID21, ID22 (together with ID13 and ID14) in 1997. After more than 15 years of continuous daily operation, they suffer of aging. For example the principal rotation gear needs to be maintained regularly to avoid wear and keep the precision of the rotation by rotating the gear of one fourth. And for certain monochromators 4 fourth have already been made. Another alert could be seen also in the recent and sudden break down of the principal rotation motors of BM23 monochromator.

Furthermore, the conception itself of these monochromators has never been made to cope with the present and future challenging scientific goals. Despite a constant upgrade of the systems, they are not able to fulfil the future requirements in terms of position and angular stability, thermal stability, cooling system, vibration, rotation speed, control and feedback, in particular in the framework of the ESRF upgrade. The main conception weakness leads into the fact that all these parameters have been addressed (when addressed) in successive steps and not in an integrated manner.

Conception

Future challenges

DCM Working Group

- Only Double Crystal Monochromator technology
- Dedicated to spectroscopy (scanning)
- Vertical deflecting geometry

ESRF DCM WORKING GROUP

Pluri-disciplinary group: BL scientists, Optical, Mechanical, Control Engineers

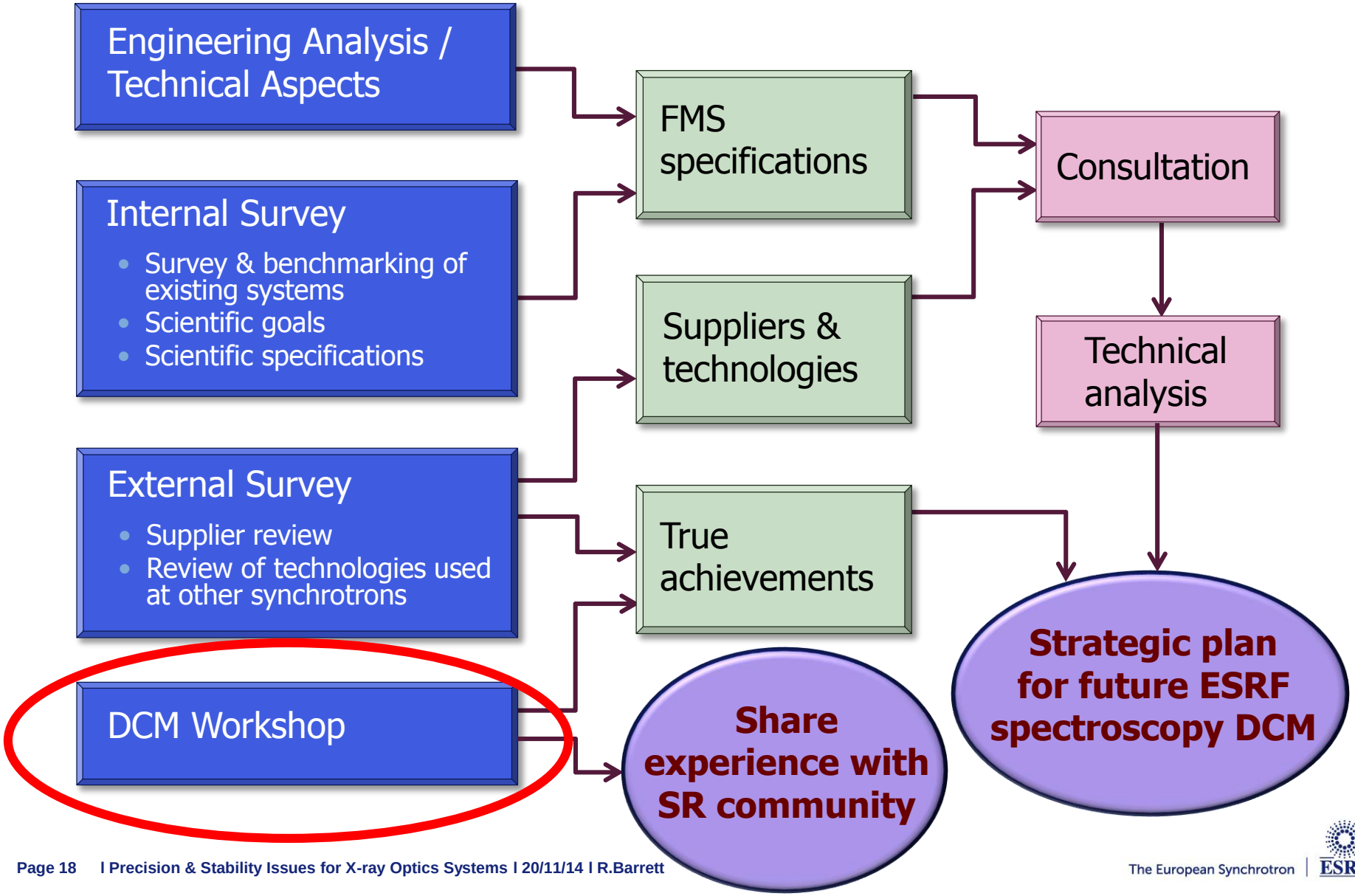

PROGRAMME

Sessions I & II:	Current capabilities and future needs
Sessions III & IV:	Developments and Industrial capabilities
Session V:	General/mechanics
Session VI:	Monochromator Characterisation
Session VII:	Around the crystal
Session VIII:	Round table and concluding remarks

TOPICS:

Performance characterisation	Fast and or continuous scanning
Future requirements	Feedback stabilisation
Cooling strategies	Mechanical/thermal stability
Alignment & maintenance	Crystal mounting/alignment
…	

All talks available at:
http://www.esrf.eu/home/events/conferences/double-crystal-monochromator-workshop/talks.html

KEY MESSAGES

Sources aiming for high energy/spatial resolution and energy stability mostly experience limitations with current generation of commercial devices

e.g. crystal parallelism stability at fixed energy (measured in-situ):

Courtesy: Ilya Sergeev, PETRA III

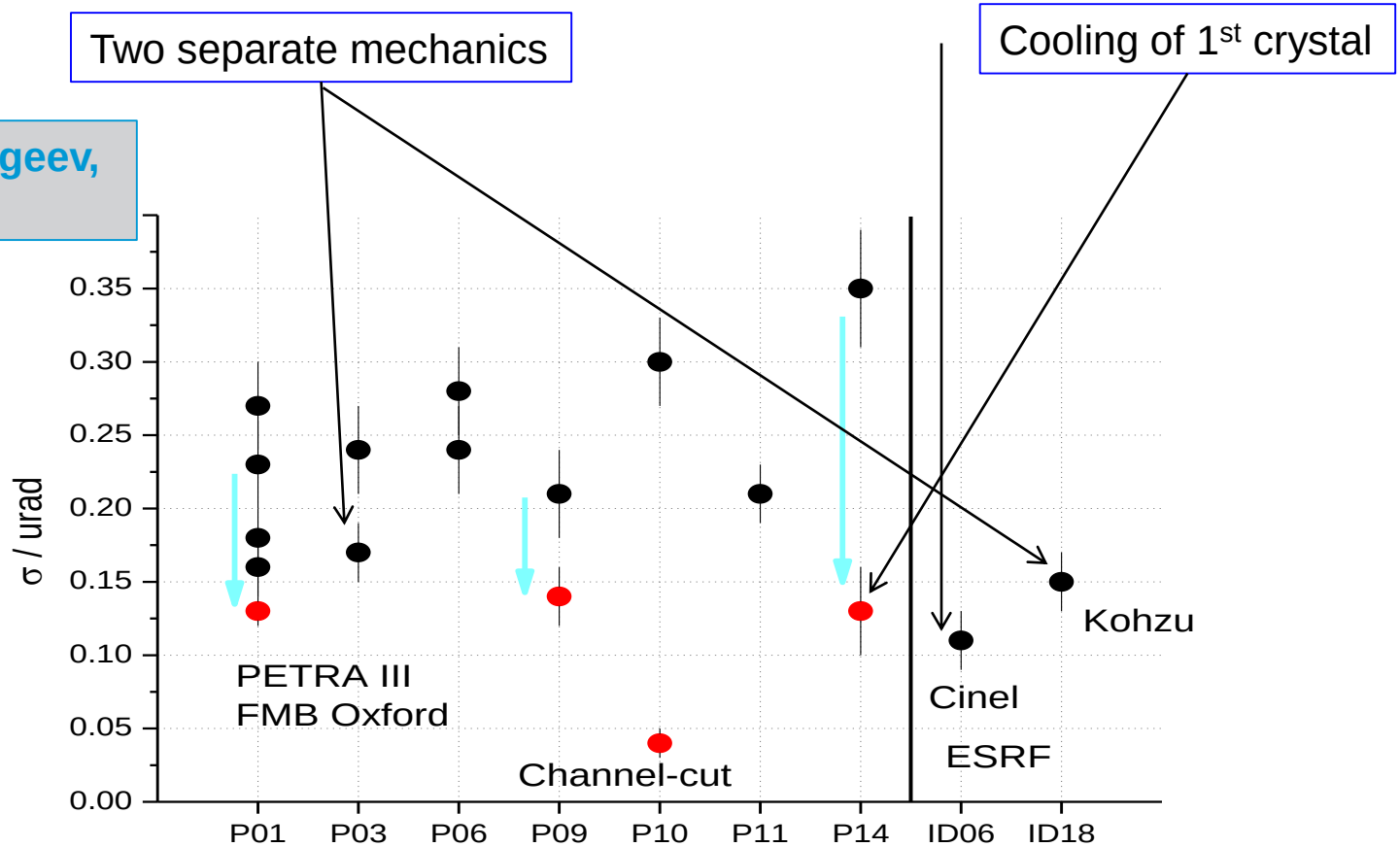

BUT: Also DCM systems demonstrating sub-50 nrad rms with LN2 cooling/beam!

BEAM STABILITY DURING ENERGY SCAN – MORE CHALLENGING

Micro-beam trajectory in sample plane during an energy scan: *Courtesy M. Salome*

- Si (111) monochromator
- KB focused micro-beam
- Energy range : 3 keV to 7.5 keV and back,10 eV steps
- Angular range: 41.23 to 15.28 º
- Micro-beam position measured on fluorescence screen in KB focal plane with video-microscope in BPM mode
- Δ=3µm in focal plane corresponds to crystal parallelism variation ~10µrad

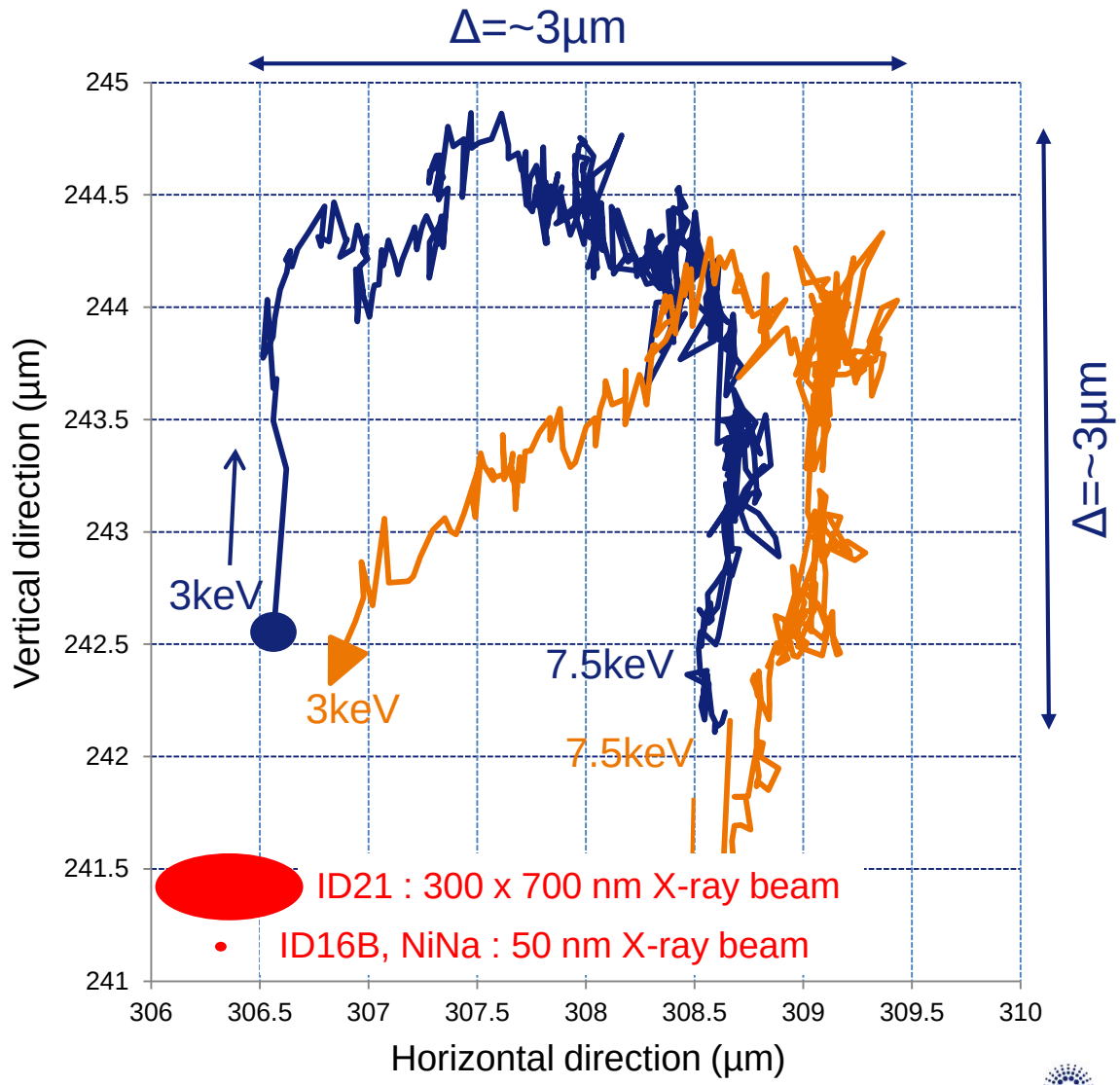

CRYSTAL CAGE PARALLELISM ERRORS – STATIC SOURCES

Rotating plate provokes angular errors

Deformation is Bragg angle dependent

Bearing guide errors, typically 25 µrad / 200mm (locally, 0.1 µrad / mm)

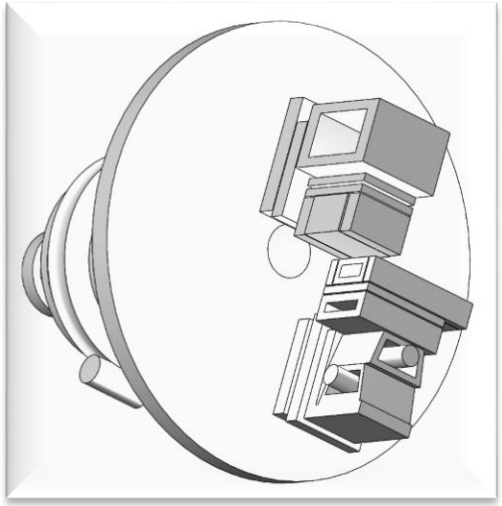

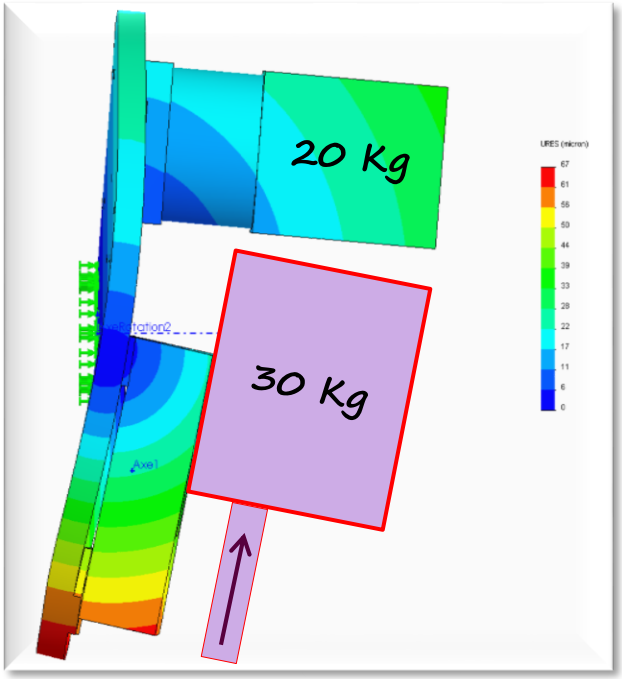

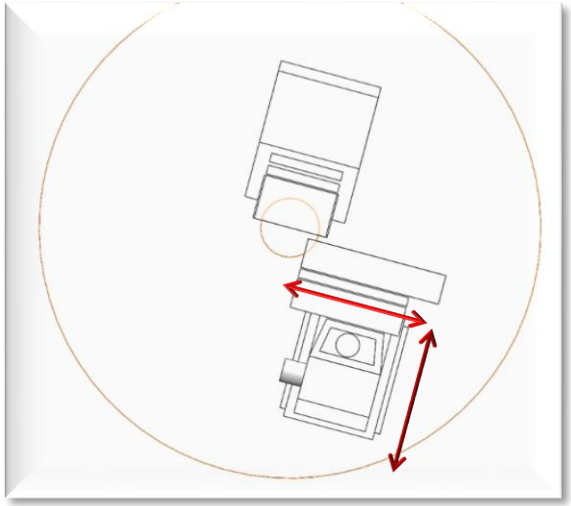

Parallelism errors cause:

- changes in beam position
- intensity fluctuations
- changes in mean energy

Kohzu case : lower cam partially supports 2nd crystal assembly, recucing strain on rear plate

Bearing guide errors, typically 25 µrad / 200mm (locally, 0.1 µrad / mm)

Courtesy R. Baker, Y. Dabin – ESRF

+ dynamic sources driven by vibrations (e.g. cooling) and thermal perturbations (beam on/off, change of energy/undulator settings)

BRAGG AXIS DYNAMICS

Important to analyse whole system

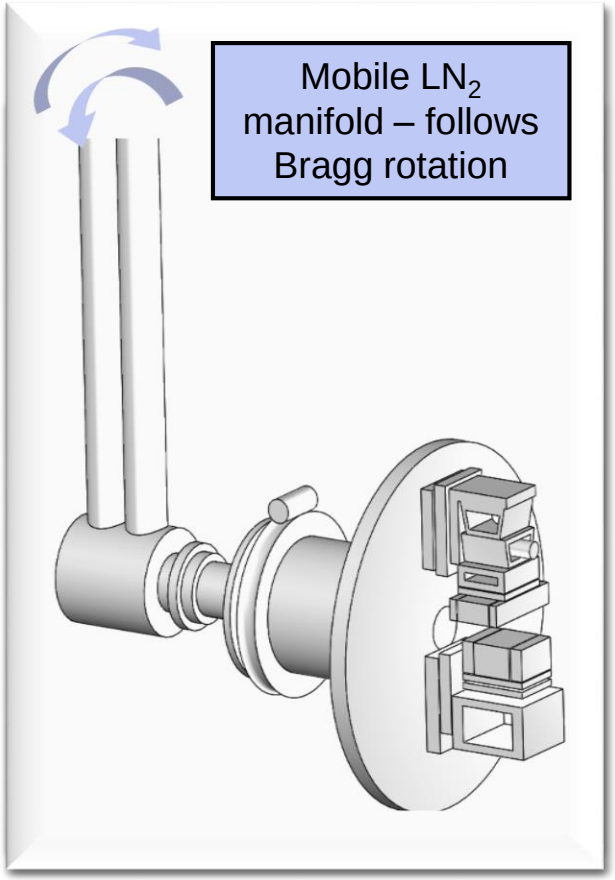

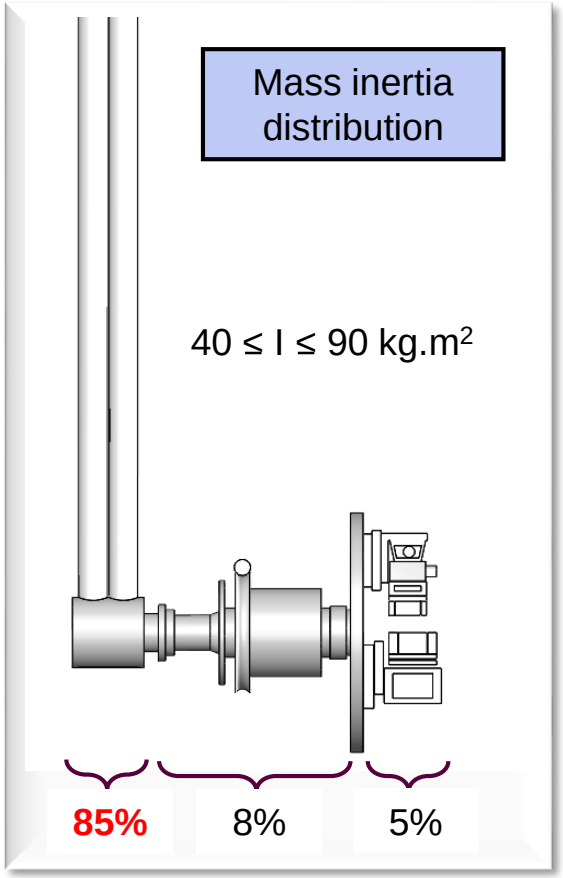

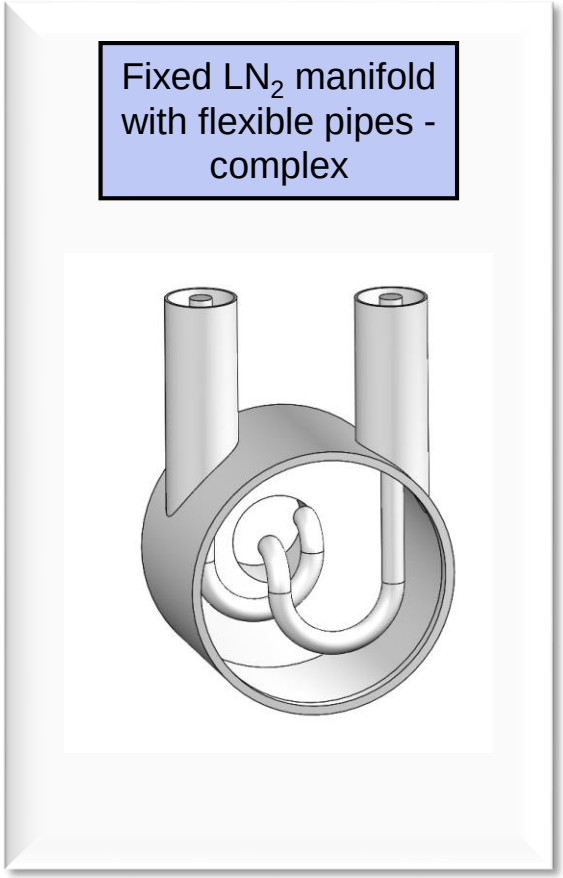

Bragg axis drive should be optimised to deal with this

Courtesy R. Baker Y. Dabin – ESRF

Thermal time constant

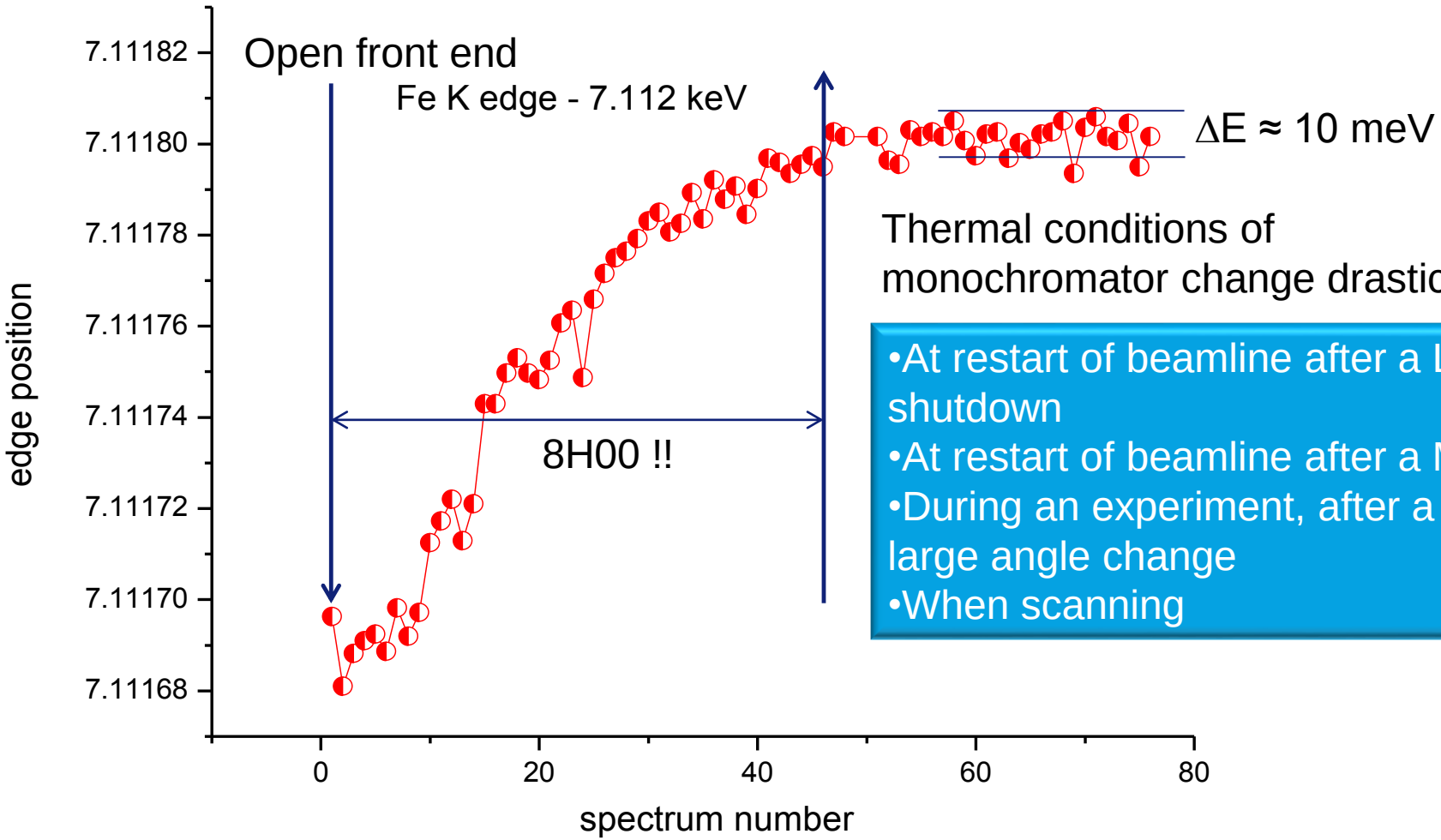

Thermal conditions of monochromator change drastically:

- At restart of beamline after a LN2 shutdown
- At restart of beamline after a MDT
- During an experiment, after a large angle change
- When scanning

STILL LEARNING, BUT DIRECTION IS CLEARER…

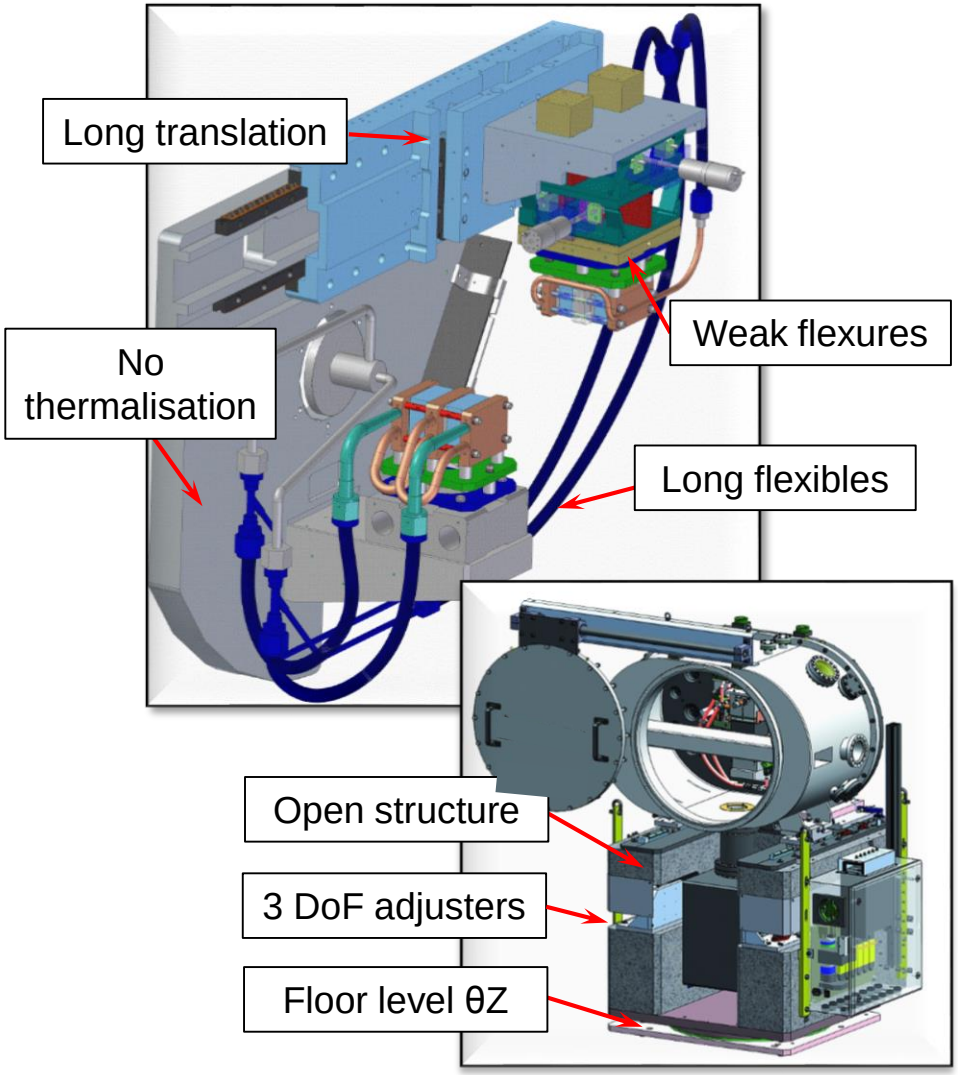

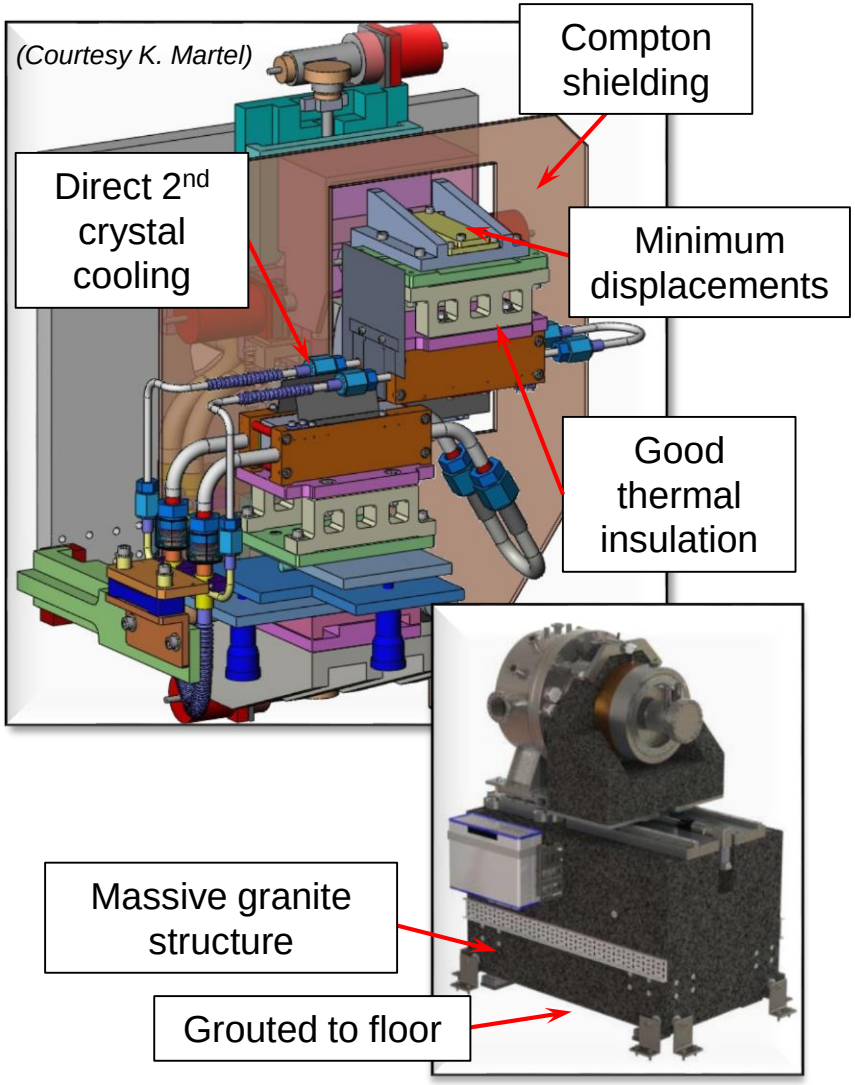

IDENTIFIED PROBLEMS – NEW CONCEPTS/PROTOTYPES REQUIRED

Problem	Solution
1st Natural frequency crystal cage >100Hz	Stiffer mechanical displacements, lighter mechanics, minimal cantilever load…
Long term thermal stability	Multiple sensors & heater algorithms, constant heat load…
Crystal parallelism <100 nrad over large scans	Tight mechanical tolerances, increased stiffness / weight ratio, stiffer base plate, integrated metrology & feedback
Stable beam position for nano imaging	Fast & efficient feedback loops
Online metrology	Radiation & vacuum compatible feedback metrology
Minimal delta T between crystals	More efficient 2nd crystal cooling, heater elements…
And many others !!	...?

CONCLUSIONS

During the ESRF Phase I upgrade we have developed strategies for improving environmental stability of the beamline hutch environments

Generic solutions for improving the stability and precision of critical optical components have been developed:

- **Mirror/multilayer systems**
- **(Refractive lens transfocators)**

We are now examining strategies to renew our park of fixed-exit double crystal monochromators for spectroscopy applications

Not discussed here: *Feedback correction – XBPMs*

THANK YOU!