Conceptual Design of a Storage Ring Vacuum System for the APS Upgrade

Benjamin Stillwell
(On behalf of the APS-U accelerator vacuum team)

4th Diffraction Limited Storage Ring (DLSR) Workshop
Nov. 19-21, 2014

Outline

- Design constraints
- Basic design scheme
- Synchrotron radiation ray trace
- Mechanical design of components
  - Chambers
  - Beam position monitors
- Vacuum simulations
- Design rationale
- Leveraging parametric CAD
- Design alternatives

Design Constraints

- Particle beam chamber must fit inside multipole magnet bore diameter of 26 mm (without touching)
- Water channels and x-ray extraction ports must pass through a 10mm vertical pole gap.
- Provide an average pressure of 2nTorr during operations with beam.
- Control thermal drift of beam position monitors to ~10's of μm and vibration amplitude < 70nm
- Minimize impedance effects
- Install 40 sectors within 6-7 month period

Basic Design Scheme

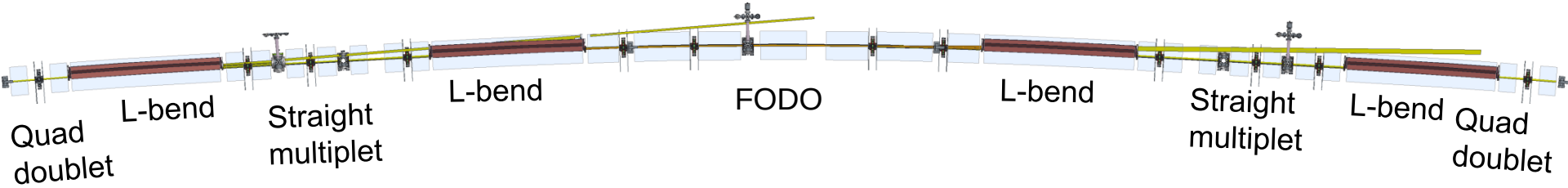

- **Nine sections to be installed with magnets as integrated modules:**
  - **1x FODO:** Tubular copper chambers with water-cooling channels on outboard side. High power synchrotron radiation hits the chambers. Central 4 meters is NEG-coated.
  - **4x L-bend:** Al extrusions with large antechambers on the outboard side which house NEG strips, photon absorbers, and ion pumps.
  - **2x Multiplet:** Extruded aluminum tubes with water-cooling channels on inboard side. A small amount of synchrotron radiation is allowed to portions of the chambers.
  - **2x Quad Doublets:** Extruded aluminum tube chamber with water channel on outboard side is used in outer quad. A stainless steel 904L tubular chamber, internally Cu-plated, and with welded water-cooling channels is used in inner quad and fast corrector.
- **Flanges:** Chain-clamped ConFlats made of SST316L. Custom-machined to minimize gap.
- **RF BPMs:** Integrated inside a lined bellows assembly. There is one in each quad doublet, three in each straight multiplet, four in the FODO. There are more in ID straight section.
- **Gate valves:** Two to isolate the arc from the ID straight and two to isolate the NEG-coated section.

Synchrotron Radiation Ray Trace

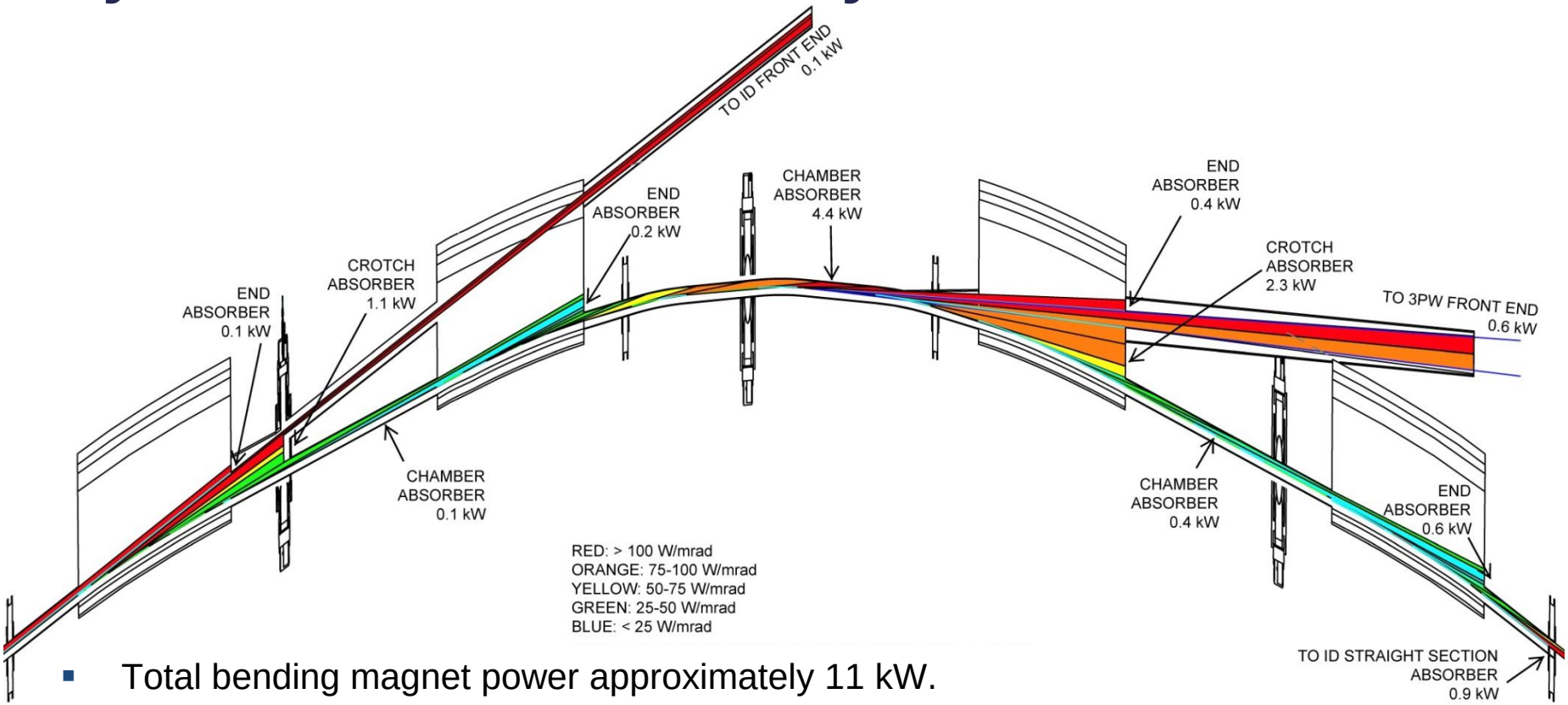

- Total bending magnet power approximately 11 kW.
- High power bending magnet radiation generated primarily in central section and at outer ends (near ID straight section).
- FODO chambers receive slightly less than half of the total power. Power densities there 10-15 W/mm^2
- Straight multiplet chambers receive very little power (100 W/m). Most is intercepted by “in-line” absorbers upstream of the BPM assemblies.

L-Bend Vacuum Chambers

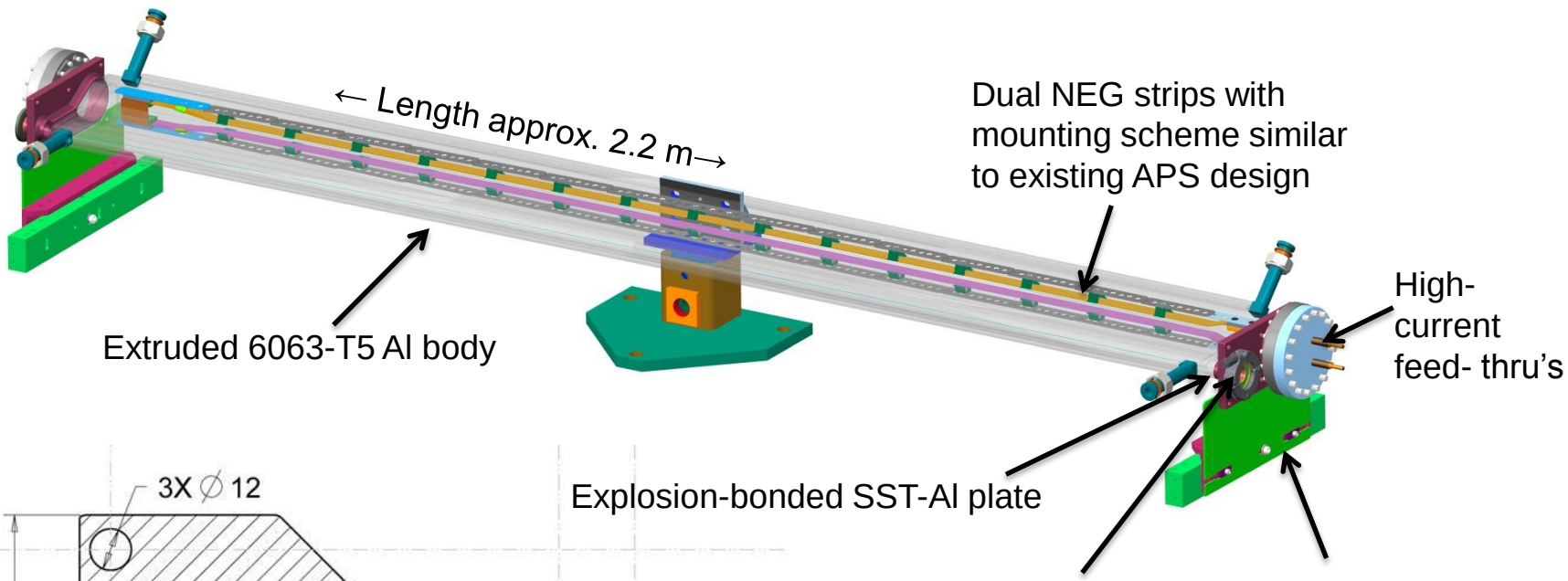

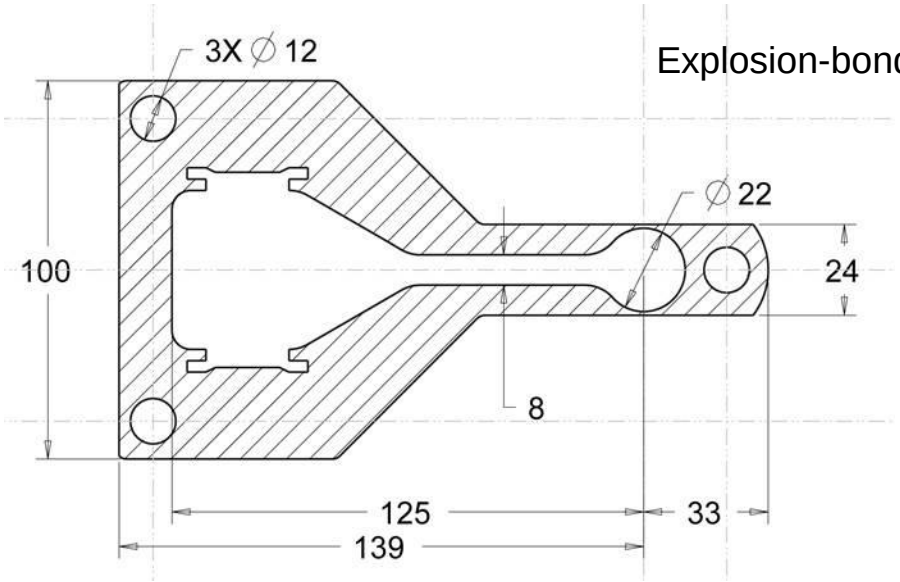

Multiplet Vacuum Chambers

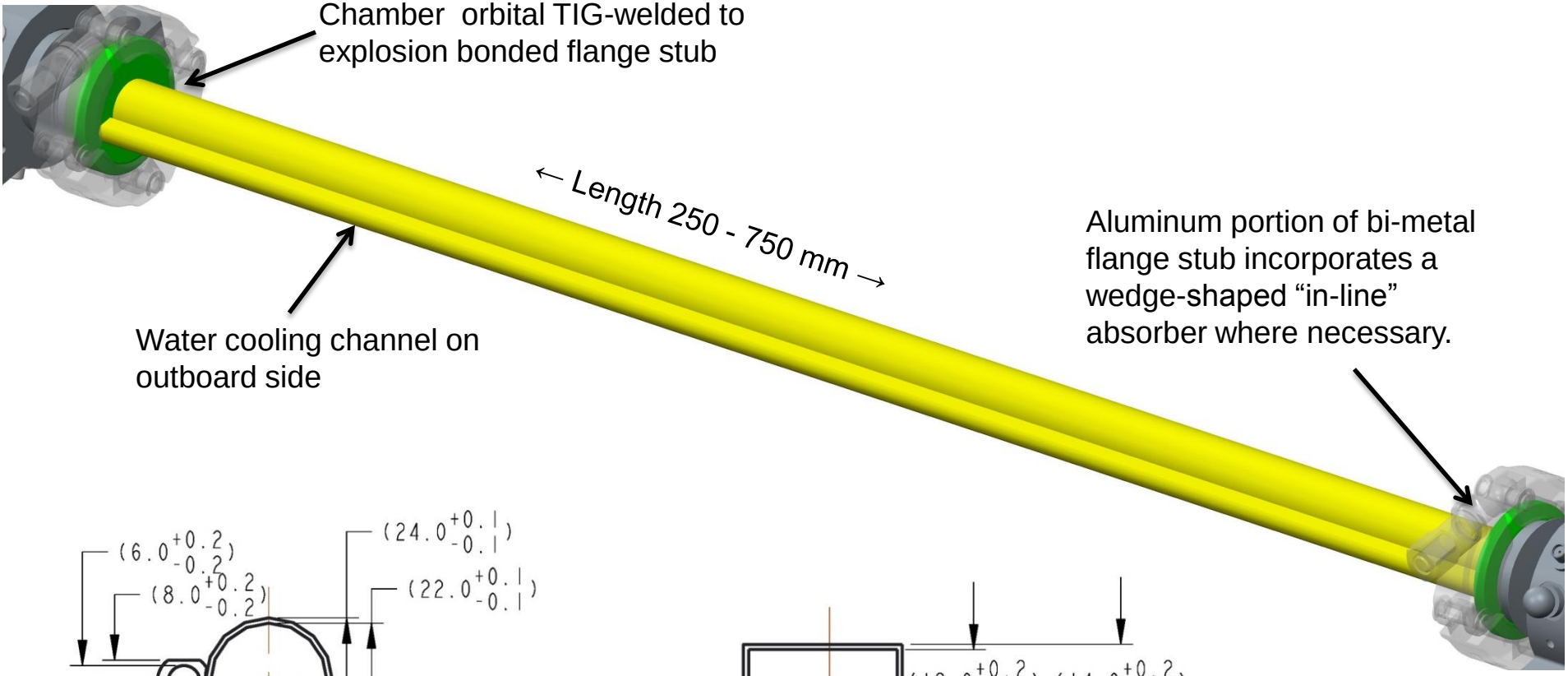

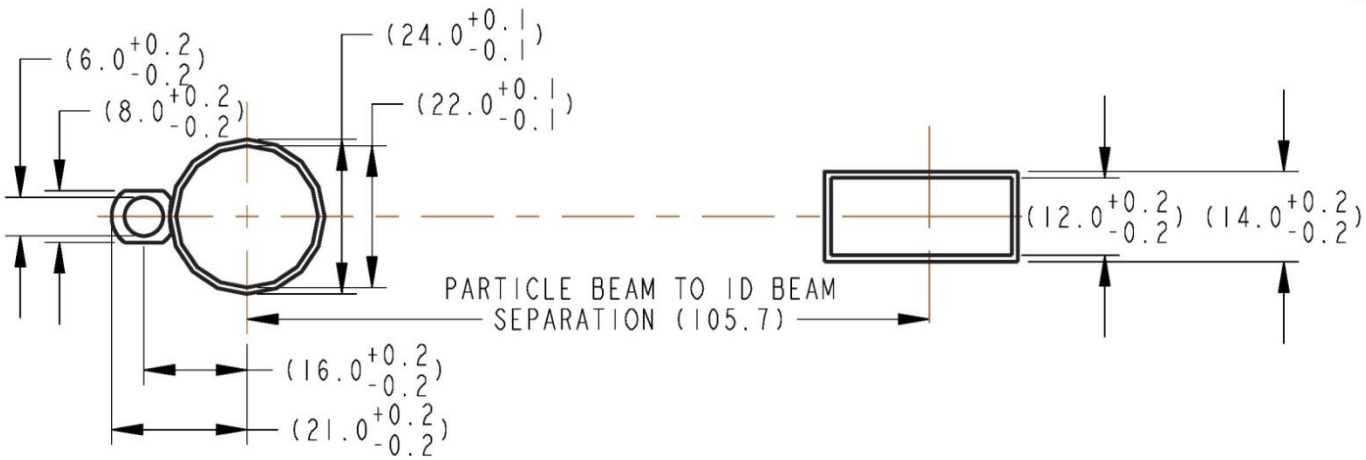

FODO Section Vacuum Chambers

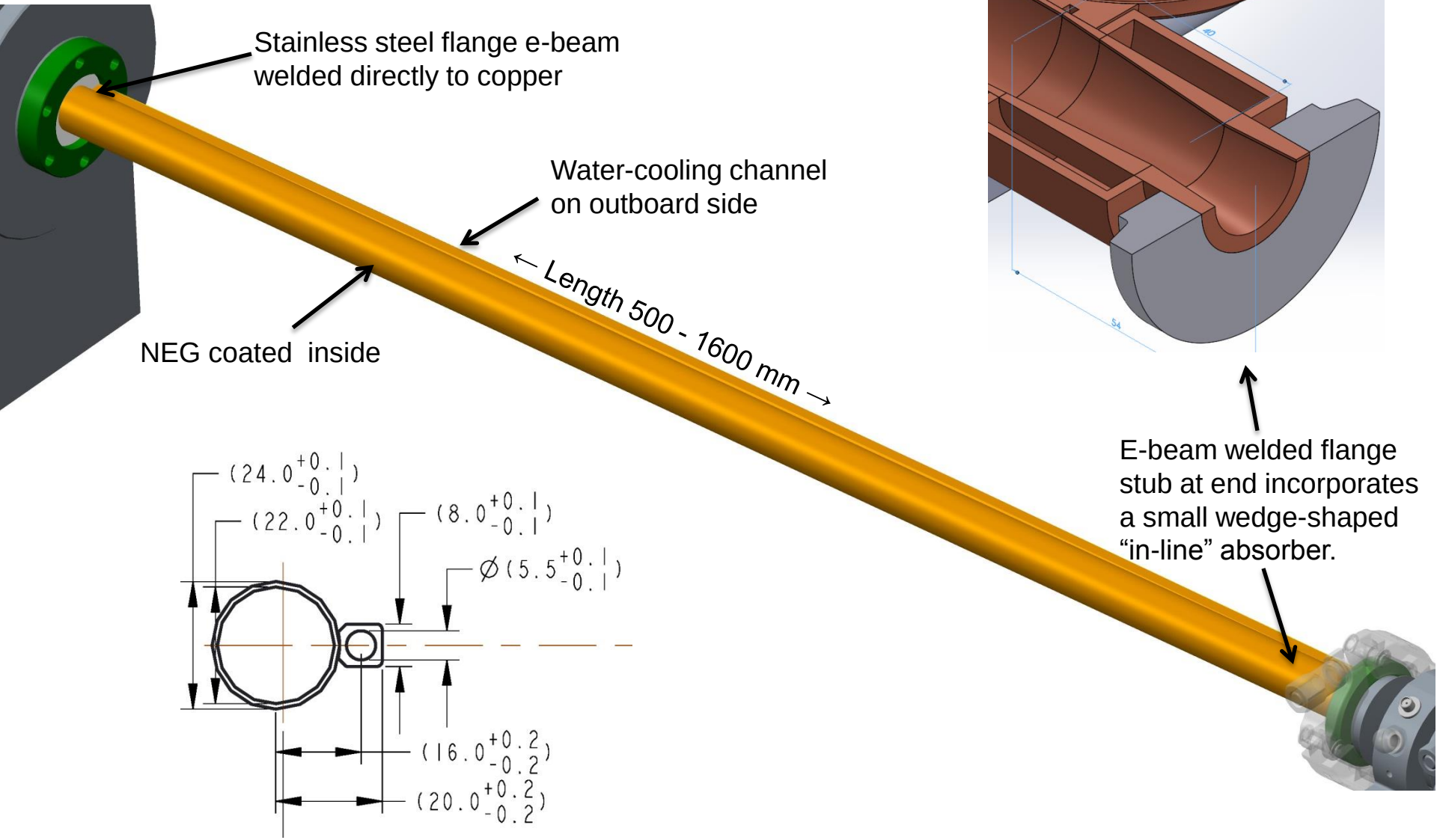

Special X-ray Extraction Chambers

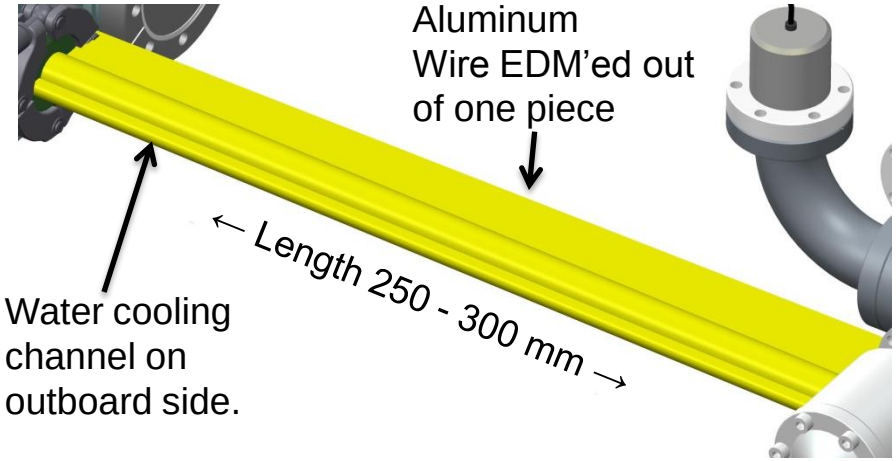

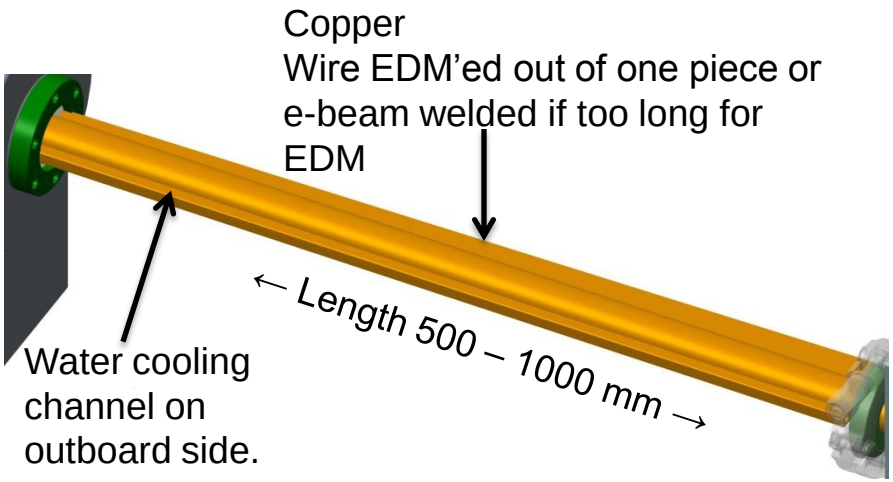

ID Beam Extraction

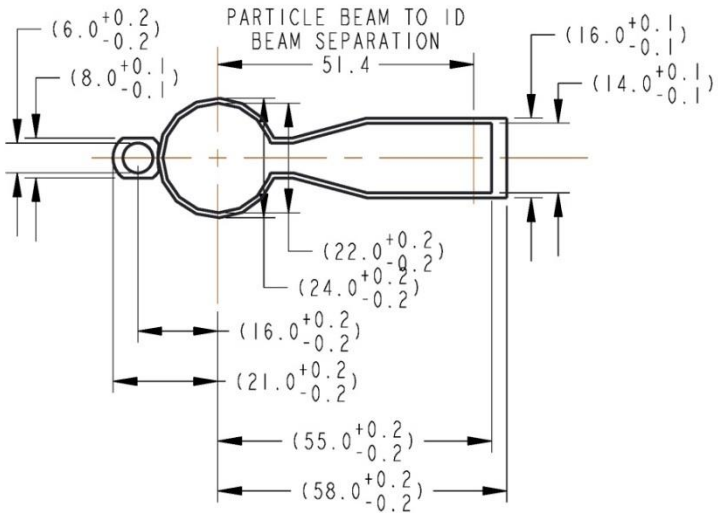

BM Beam Extraction

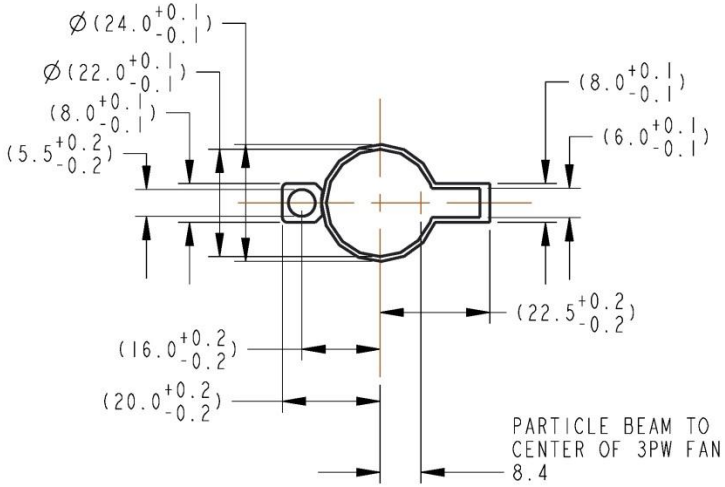

Integrated BPM / Bellows Assemblies

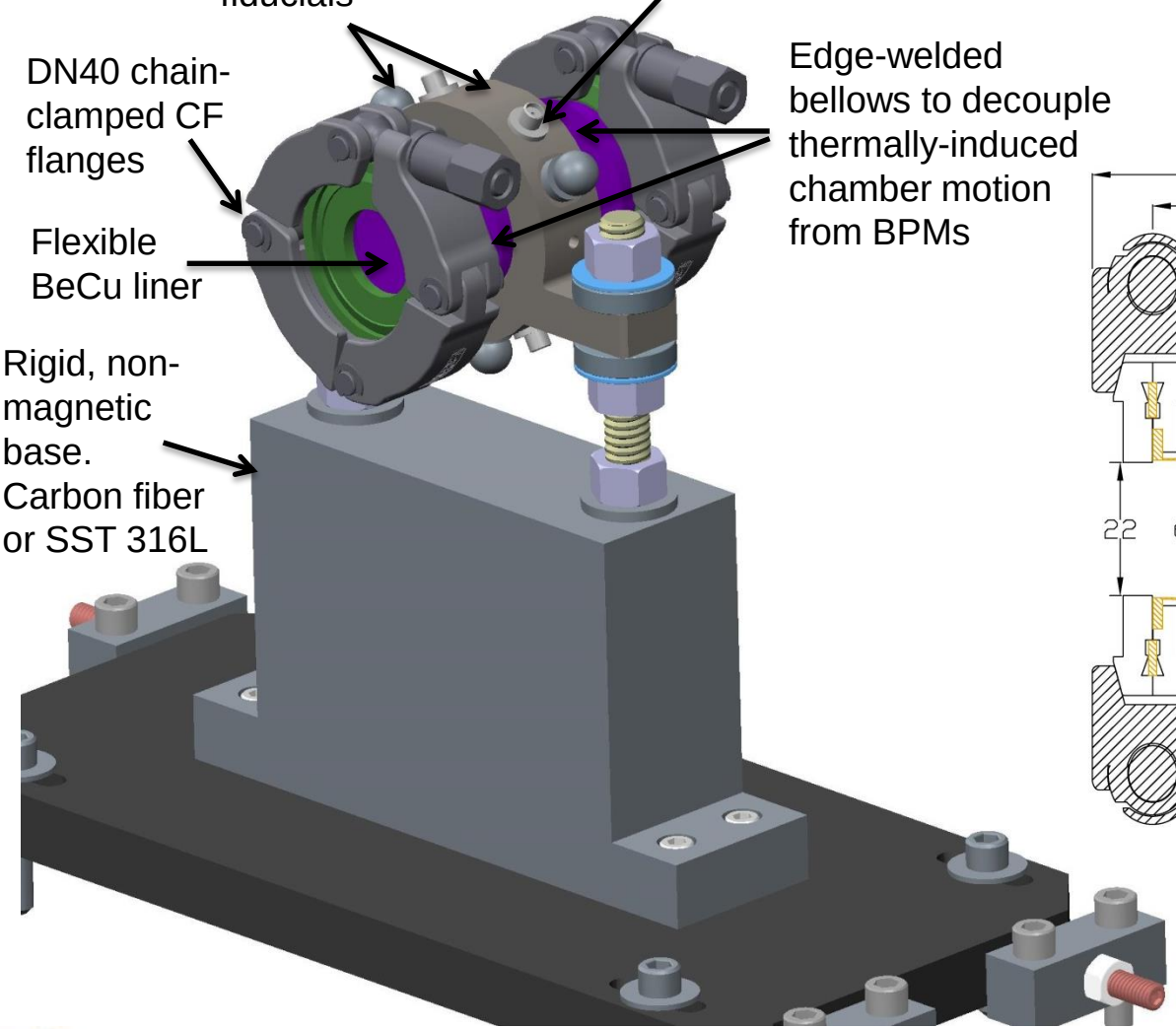

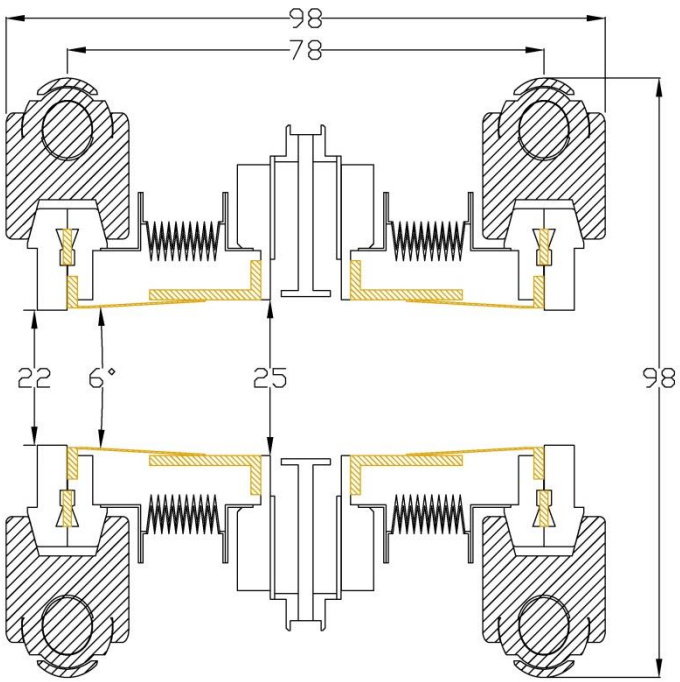

Vacuum Pressure Simulations

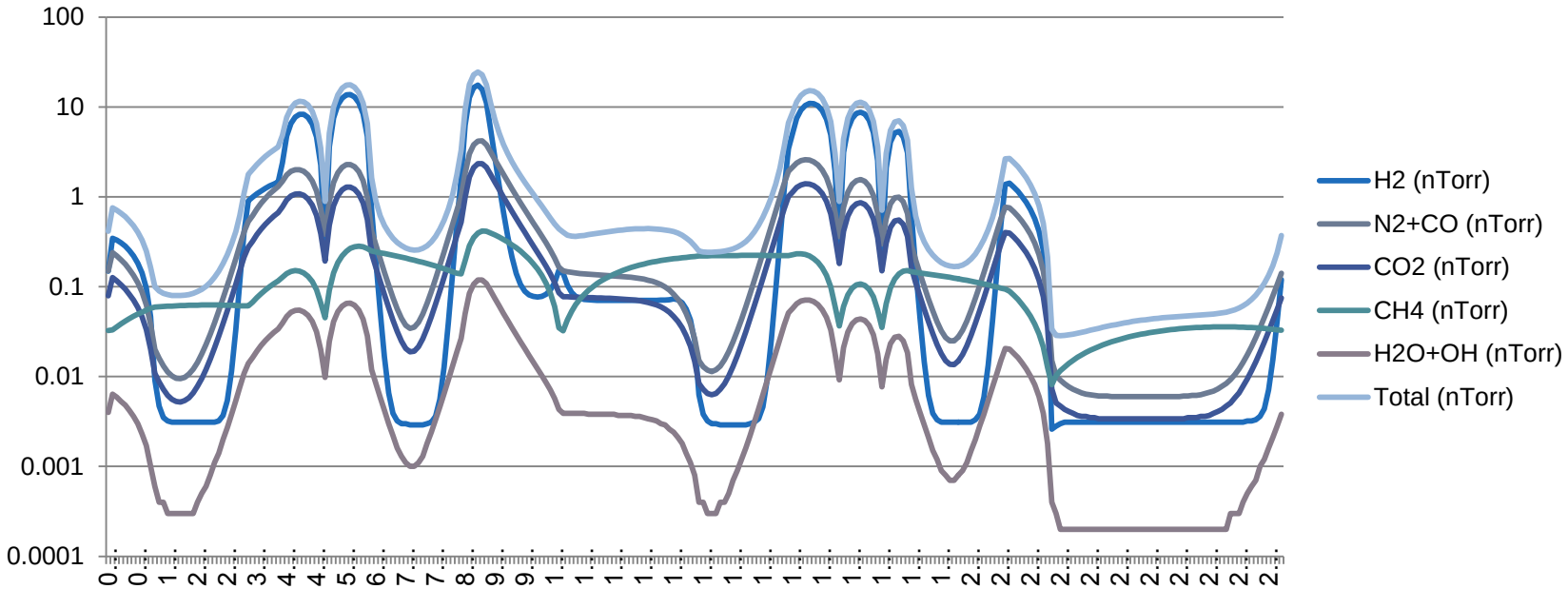

- 1D and 3D vacuum simulations have been done using a very simple set of assumptions. One very conservative (no absorbers shielding BPM/bellows) and one very non-conservative (no PSD from secondary photons).
- Average pressure after 20 days of full current roughly 2 nTorr.
- Multiplet sections can be almost completely shielded with absorbers upstream of the bellows that are roughly 3mm tall (8mm from the beam).

Design Rationale (1/2)

- NEG-coated copper tubular chambers are used in the one section where they are most warranted (FODO). Using gate valves, this section can be installed under vacuum (with active NEG material) and pre-assembled with magnets. The gate valves also reduce the likelihood that the NEG-coated section has to be vented during a maintenance intervention. If the NEG-coated section does have to be vented, the number of magnets are effected is minimal.
- L-bend magnets are C-shaped and so do not preclude using an "antechamber" on the outboard side as is done presently at the APS and many other facilities. The L-bend sections represent roughly one third of a sector. By controlling the photon stimulated desorption and using high-speed distributed pumping (NEG strips) along the chamber length, we ensure very low vacuum pressures here. There are also sophisticated aluminum chamber manufacturing capability and knowledge at the APS to be leveraged which reduces risk – both technical and vendor-related.

Design Rationale (2/2)

- In the multiplet chambers, the synchrotron radiation that would hit the walls of a tubular chamber is relatively small so power loading and photon-stimulated desorption are likely manageable. Relatively large gaps between magnets (roughly 250mm) permit placement of “lumped” pumping stations to manage the gas load. Placing small “in-line” absorbers upstream of BPMs will reduce photon simulated desorption where it is most problematic (mid-way between lumped pumps). These chambers can also be made very inexpensively.
- In the quad doublets, the short distance between the L-bend section and the pumps that are expected at the ends of the ID straight sections suggests that pressure rise will not be too great along the tube.

Leveraging Parameterized CAD

- "Sandbox" model constrained initially by lattice and magnet geometry with only enough detail to evaluate the most basic implications of the design: Mechanical properties, vacuum properties, interferences and stay-clears. The beam trajectory also allows bending magnet radiation ray traces to be generated readily.
- Program model with minimum number of "parameters" so that iterating under new geometric constraints can be done quickly: Beam path, magnet locations, chamber cross sections, x-ray extraction planes, component locations.

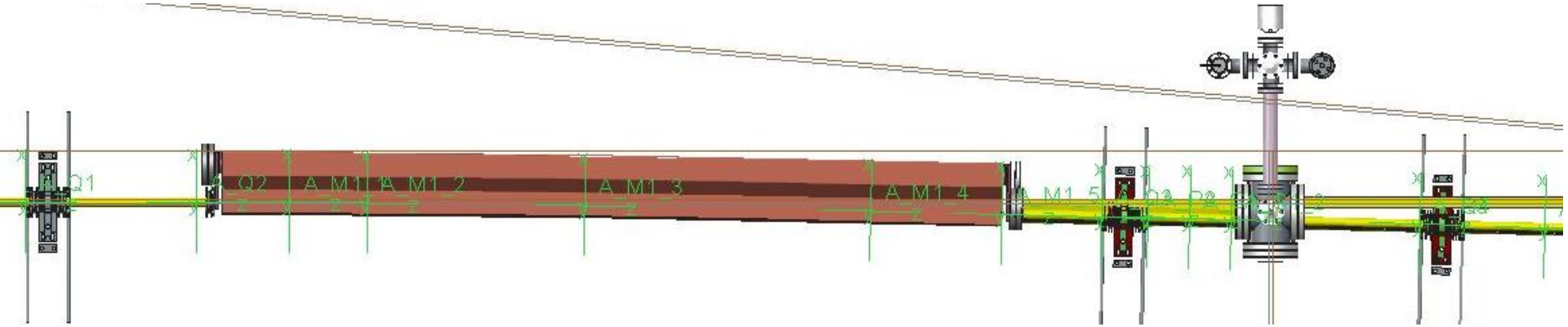

Leveraging Parametric Computer-Aided Design for Efficient Optimization of a Storage Ring Vacuum System Design for the APS Upgrade, Presented at MEDSI 2014

Design Alternatives

- **All NEG-coated copper chambers**
  - More attractive if more time is available for installation and experience with magnets suggests that alignment can be quickly recovered after splitting.
  - We will be following developments at MAX-IV and Sirius, where this approach has been adopted, very closely.
- **Eliminating FODO section gate valves**
  - This would require in-situ activation of FODO chambers.
  - Additional installation time, recovery of magnet alignment, and less protection for NEG materials would be the biggest concerns.
- **Using antechambers and discrete absorbers in FODO section.**
- **Using antechambers and fewer discrete absorbers in the straight multiplet sections.**
- **Replacing NEG strips in L-bend chamberswith some number of "lumped" pumps**
- **Using a different kind of flange joint** (KEK, FlowMeca RHP)
- **Eliminating flange joints**

Acknowledgements

Most importantly, we've got a really great team working on the design!!

Bran Brajuskovic

Herman Cease

Jason Carter

Dave Fallin

John Noonan

Jeremy Nudell

Maria O'Neill

Ben Rocke

Greg Wiemerslage

John Zientek