Superconducting Undulators for Next Generation Storage Rings

Yury Ivanyushenkov

on behalf of the APS SCU Team

Work supported by U.S. Department of Energy, Office of Science,
under Contract No. DE-AC02-06CH11357.

Scope

- Motivation for superconducting undulators
- SCU challenges
- … and solutions – SCU0 and SCU1
- SCUs for MBA-lattice storage rings
- SCUs for FELs
- Conclusions

SCU motivation - Higher undulator field

Magnetic fields for in-vacuum undulators (IVUs) and superconducting undulators (SCUs)

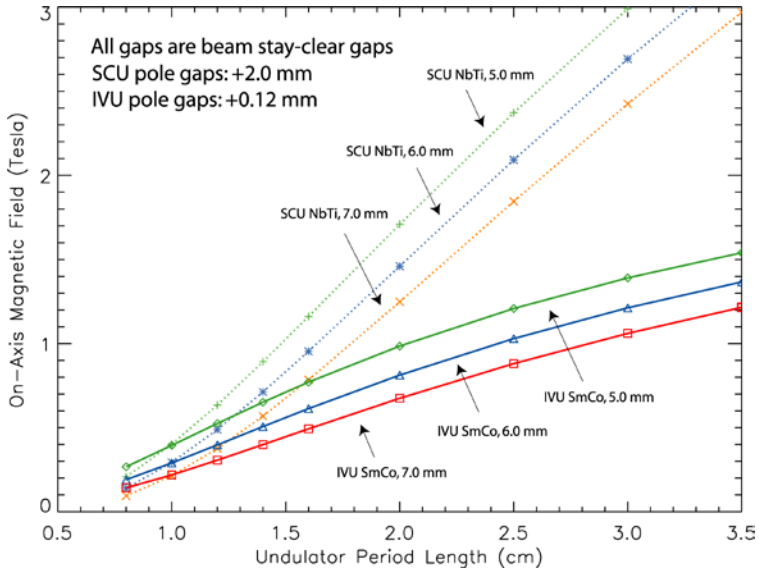

R. Dejus et al., "On-Axis Brilliance and Power of In-Vacuum Undulators for the Advanced Photon Source," MD-TN-2009-004

	CPMU PrFeB	SCU NbTi	SCU NbTi-APC
Undulator period, mm	15	15	15
Pole gap, mm	5.2	6	6
Undulator field, T	1.0	1.18	1.46
Undulator parameter K	1.40	1.65	2.05

S. Casalbuoni et al,, "Test of short mockups for optimization of superconducting undulator coils," presented at MT23, Boston, 2013.

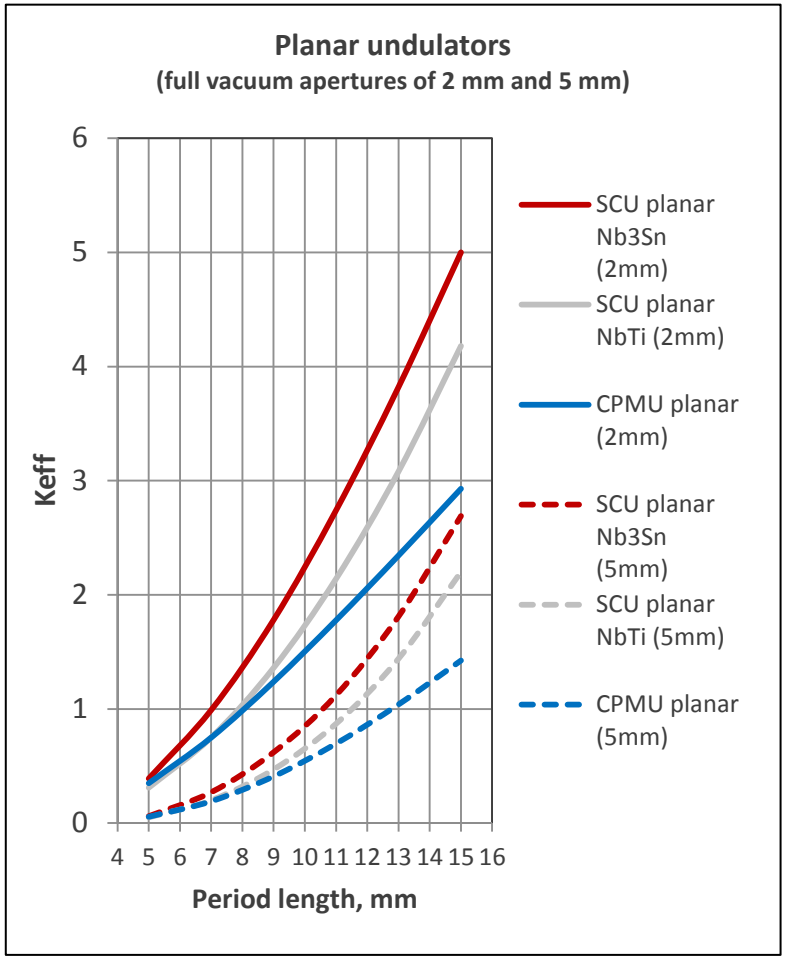

J. Bahrdt and Y. Ivanyushenkov, "Short Period Undulators for Storage Rings and Free Electron Lasers," Journal of Physics: Conference Series 425 (2013) 032001.

SCU motivation - Higher photon fluxes

Advanced Photon Source (APS)
undulator brightness tuning curves [1]

(SCUs1.6 cm vs. UA 3.3 cm vs. Revolver U2.3 cm & U2.5 cm)

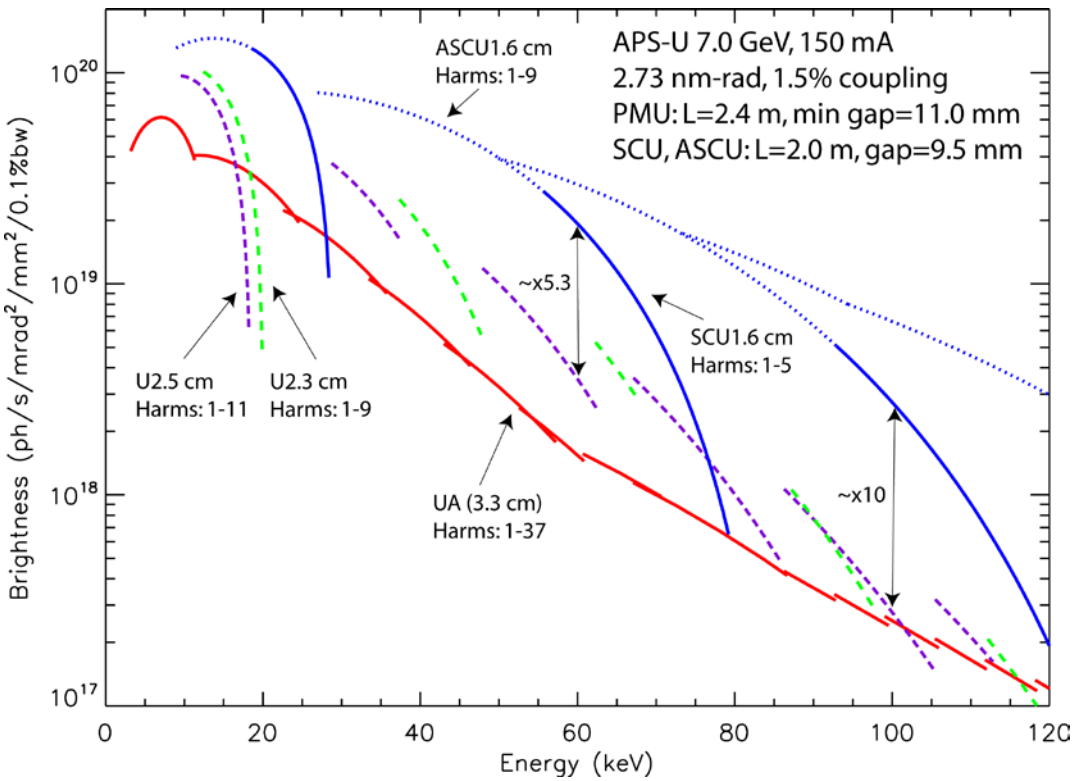

[1] R. Dejus, private communication.

SCU challenges

SCU as a superconducting magnet	SCU as an insertion device	SCU as a photon source
- Choice of superconductor; - Design and fabrication of magnetic structure; - Cooling of superconducting coils in presence of beam heat load; - Design and fabrication of SCU cryomodule.	- Low field integrals; - Measurement of SCU performance before installation into storage ring.	- High quality field: • Trajectory straightness; • Low phase error. - Shimming technique.

… and solutions

SCU0, the first superconducting undulator in operation on a 3rd generation light source

3D design model

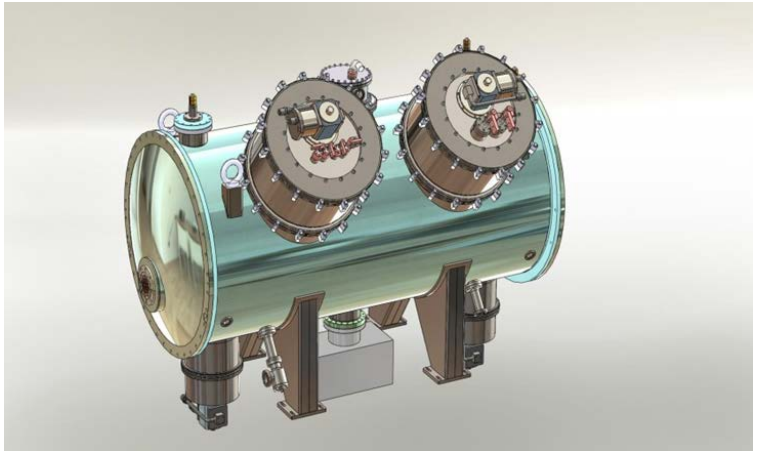

- SCU0 was installed into the APS Storage ring in December 2012
- Commissioned in January 2013
- In continuous user operation since then

SCU0 in Sector 6 of the ASP storage ring

- SCU0 was designed in collaboration with Nikolay Mezentsev's team of Budker Institute
- Built by the APS SCU team

First two superconducting undulators at the APS

APS superconducting undulator specifications

	Test Undulator SCU0	Prototype Undulator SCU1
Photon energy at 1st harmonic	20-25 keV	12-25 keV
Undulator period	16 mm	18 mm
Magnetic gap	9.5 mm	9.5 mm
Design field	0.64 T (0.8 T *)	0.93 T
Design K	0.96 (1.20 *)	1.56
Magnetic length	0.330 m	1.075 m
Cryostat length	2.063m	2.063 m
Beam stay-clear dimensions	7.0 mm vertical × 36 mm horizontal	7.0 mm vertical × 36 mm horizontal
Superconductor	NbTi	NbTi

* Achieved value

SCU0 and SCU1 spectral tuning curves

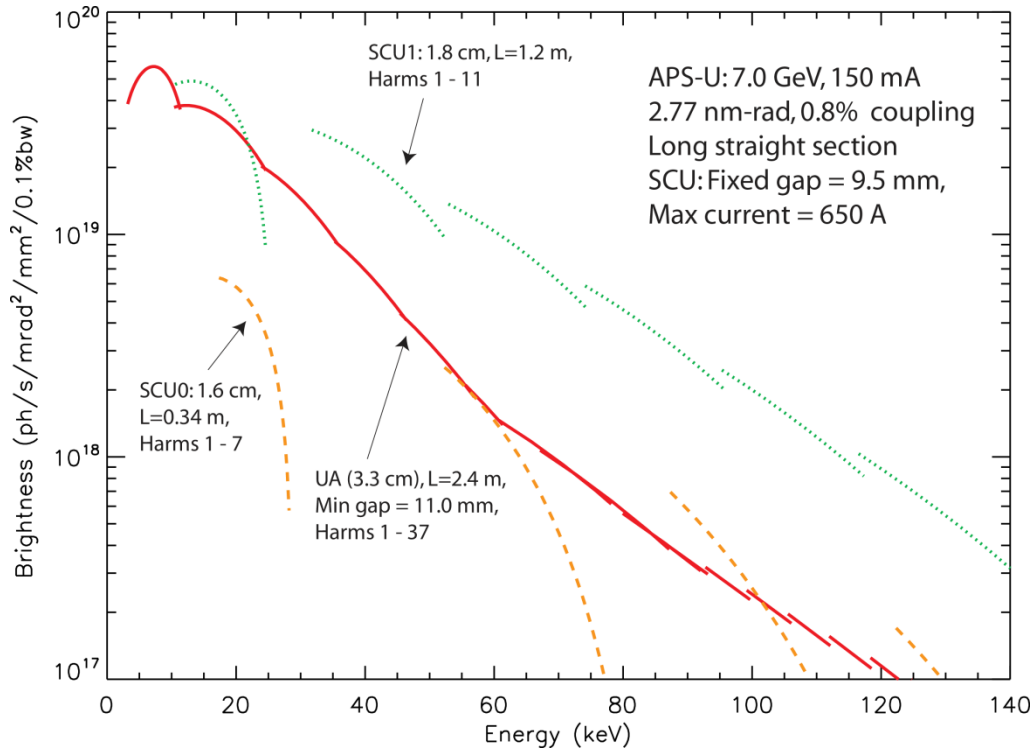

This plot shows the large increases in high-energy flux provided by superconducting devices.

SCU magnet

Current directions in a planar undulator

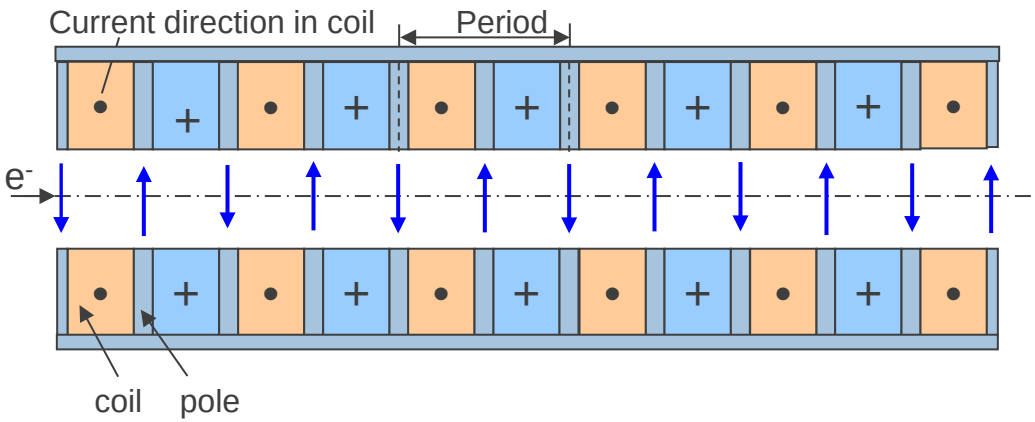

Planar undulator winding scheme

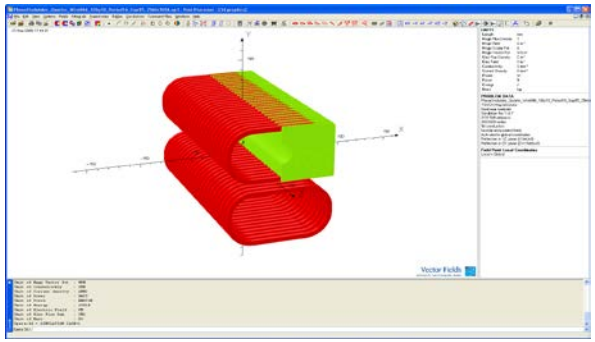

Magnetic structure layout

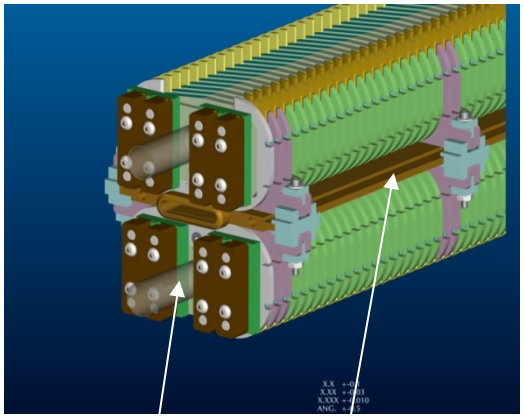

SCU1 NbTi magnet core →

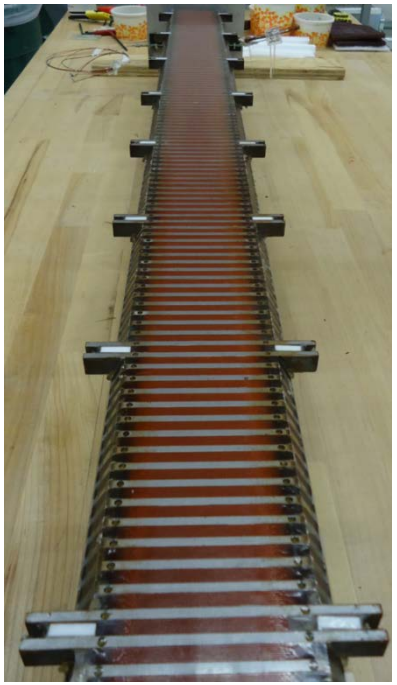

SCU0 NbTi magnet

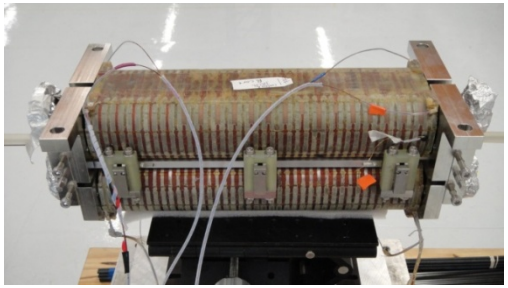

SCU cooling scheme

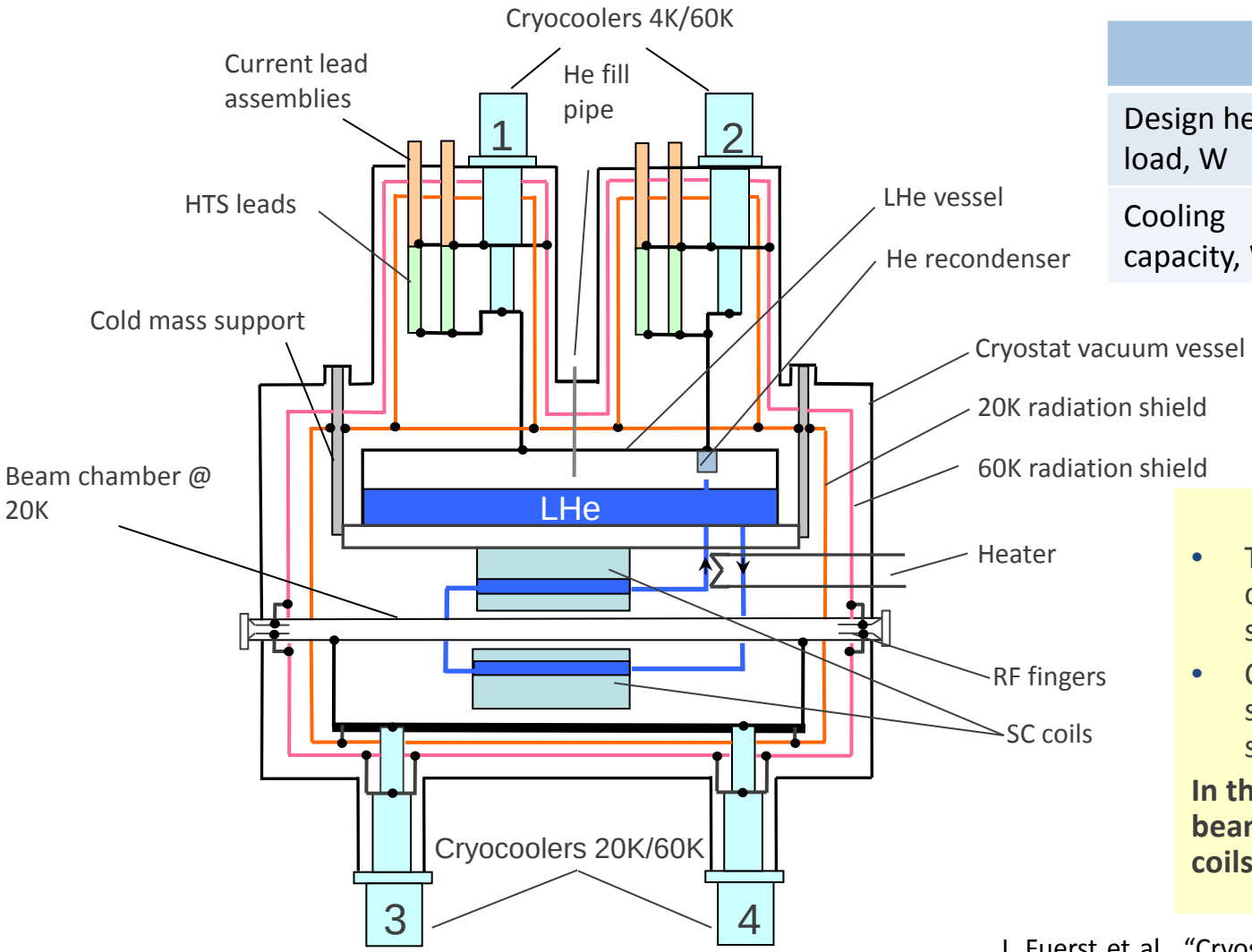

	4 K	20 K	60 K
Design heat load, W	0.7	12	86
Cooling capacity, W	≈ 1.5	40	224

Conceptual points:

- Thermally insulate beam chamber from the rest of the system.
- Cool the beam chamber separately from the superconducting coils.

In this approach beam heats the beam chamber but not the SC coils!

J. Fuerst et al., "Cryostat design and development for a superconducting undulator for the APS," Advances in Cryogenic Engineering, 57A: 901-908, 2012.

SCU cryostat

Cryostat contains cold mass with support structure, radiation shields, cryocoolers, and current lead assemblies.

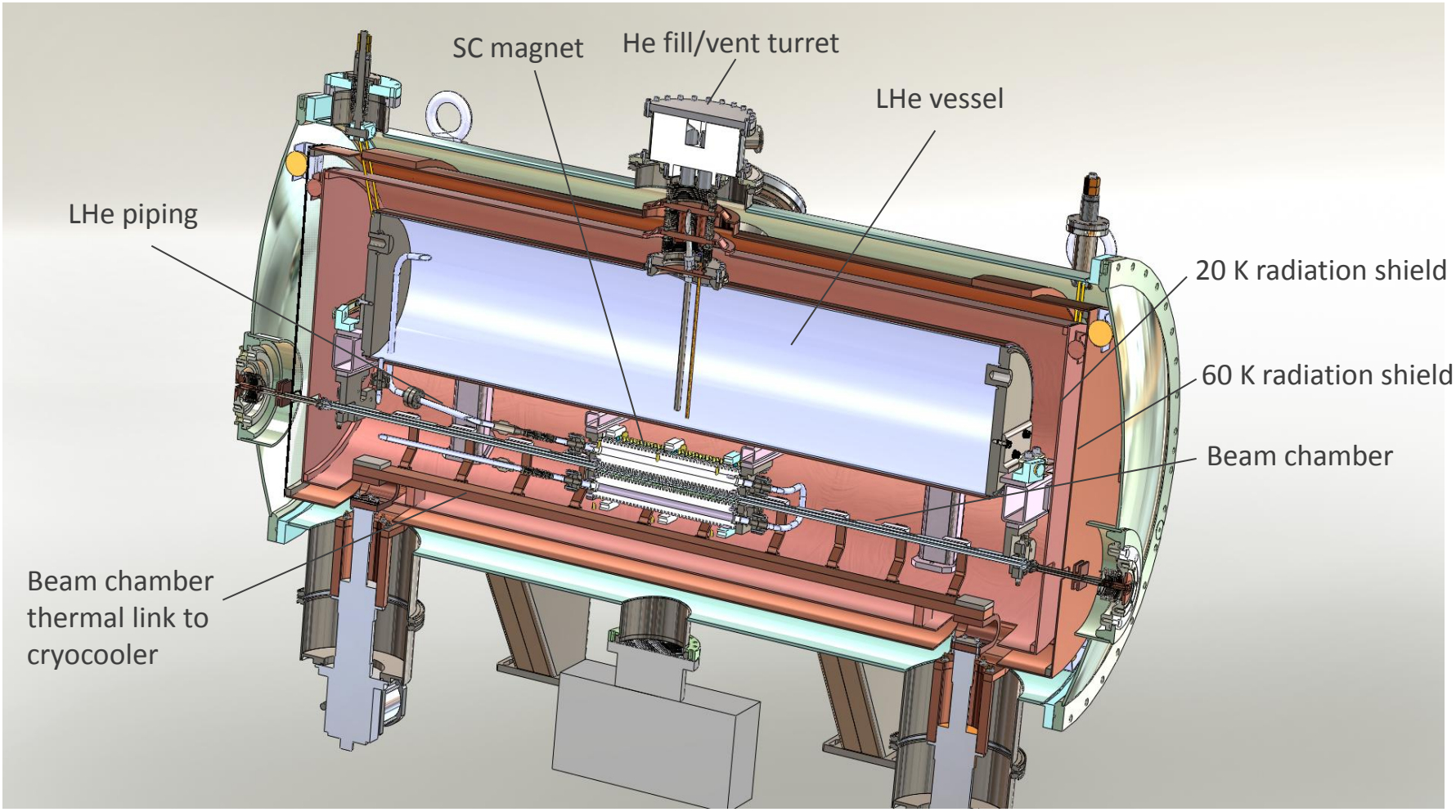

Magnetic measurements of SCU0 at APS

- SCU warm-sensor measurement system is based on a concept developed at Budker Institute for characterizing superconducting wigglers.
- Scanning Hall probe:
  On-the-fly Hall probe measurements to determine local field errors and phase errors.
- Stretched Wire Coil:
  Stretched wire rectangular, delta and 'figure-8' coils to determine static and dynamic 1st and 2nd field integrals.
  Coils can be translated along x axis approximately ±1 cm to measure integrated multipole components.

SCU warm-sensor concept

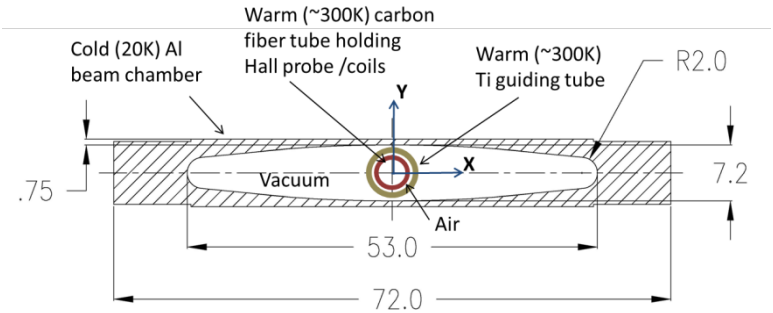

SCU0 horizontal measurement system [1]

[1] C. Doose, M. Kasa, "Magnetic Measurements of the First Superconducting Undulator at the Advanced Photon Source," THPB06, PAC2013.

Experience of operating SCU0 at the APS

SCU0 in the APS storage ring

Field integral variation measured with beam

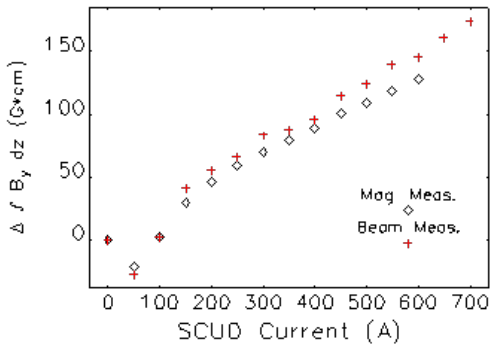

Effect of induced quench on the beam

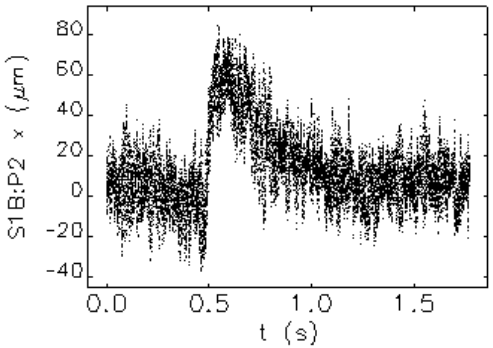

SCU0 Performance [1]:

- Designed for operation at 500 A, operates up to 650-680 A.
- SCU0 flux at 85 keV is 1.4 times higher than the one of 2.4-m U33 (Undulator A)
- Electron beam is not affected by quenches. Didn't quench except of when the electron beam was dumped.
- No loss of He is observed in about 22-month run period.

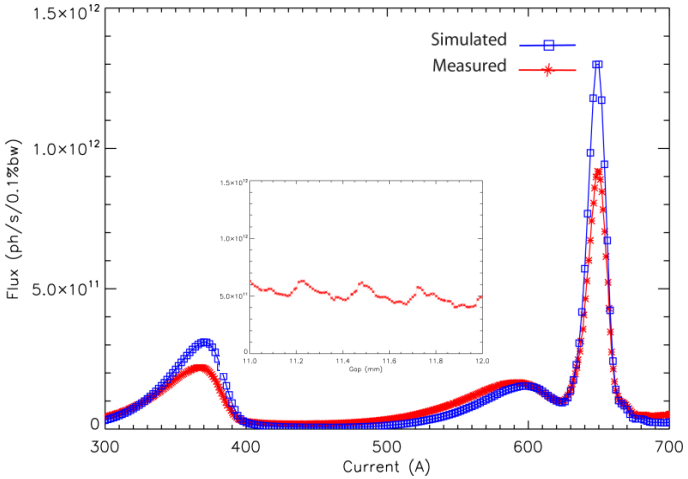

Photon flux comparisons at 85 keV.
Main: Simulated and measured SCU0 photon flux.
Inset: Measured photon flux of in-line U33.

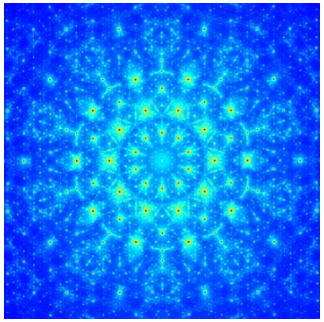

First experiments with SCU0. Diffraction pattern from Al-Co-Ni decagonal quasicrystal showing ten-fold symmetry.
Data provided by A. Kreyssig and A. Goldman – Iowa State University and Ames Lab.

[1] Y. Ivanyushenkov and K. Harkay, "Experience of Operating a Superconducting Undulator at the Advanced Photon Source", WEPRO049, IPAC2014.

SCU1 preliminary measurements and status

- SCU1 magnet is completed and tested in a vertical LHe bath cryostat:
  - Design field achieved;
  - Phase errors are within 4.5 deg.rms (preliminary) without magnetic shimming.
- SCU1 cryostat is assembled;
- Installation into APS Sector 1 is planned for December 2014 - January 2015 shutdown.

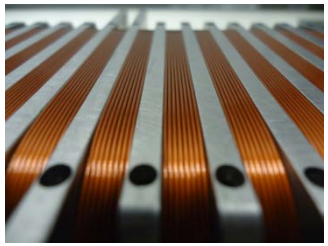

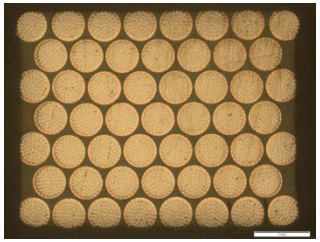

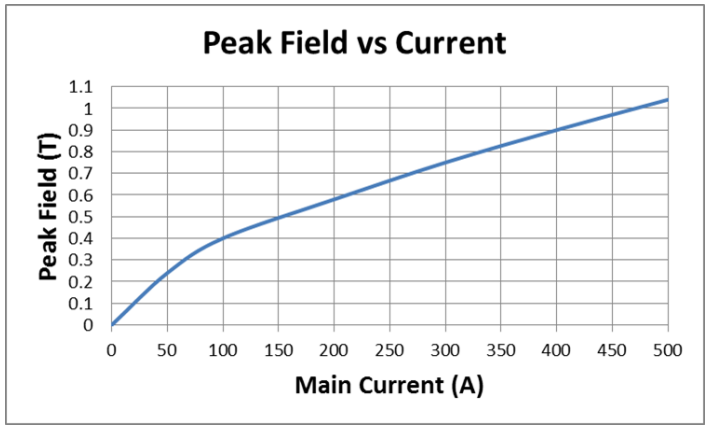

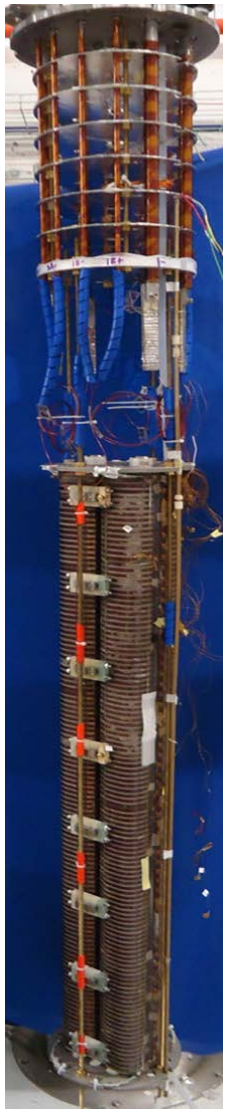

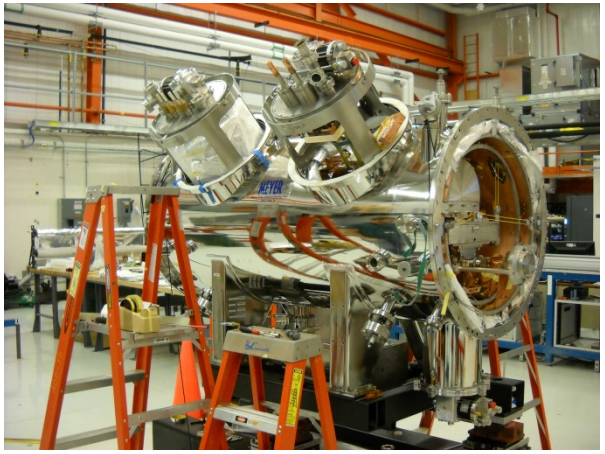

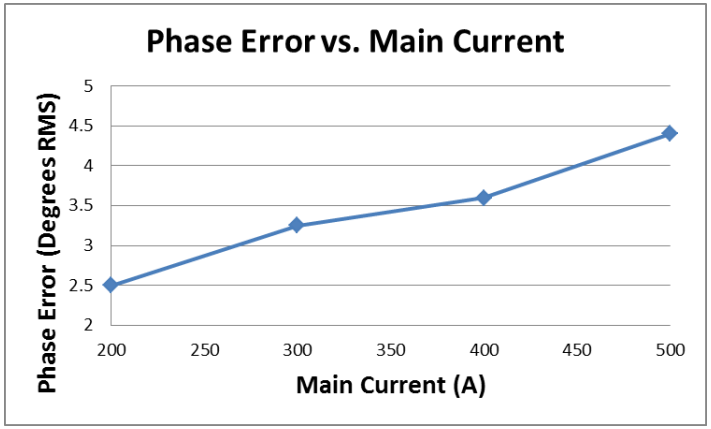

Experience with SCUs at the APS - Summary

- Superconducting magnet (up to 1.1-m long) can provide high-quality field without magnetic shimming;
- Magnetic field can be reliably measured with Hall probes and stretched coils;
- Beam heat load can be correctly estimated;
- Cryocooler-based cooling system is efficient;
- Cryocooler-induced mechanical vibrations do not disturb the electron beam;
- Helium loss-free operation is possible;
- SCU quench does not cause beam dump;
- **SCU can be successfully operated in user mode.**

SCUs for MBA-lattice storage ring

MBA-lattice storage ring vs. Third generation storage ring (APS example):

- small round beam;
- smaller beam energy;
- higher beam current.

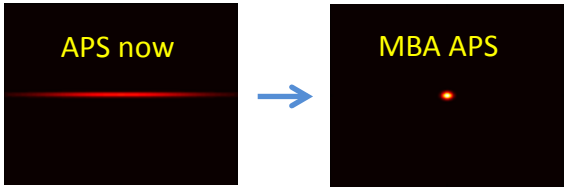

New MBA-lattice storage ring brings challenges as well as opportunities !

Planar SCUs:

- Effect of decreasing the beam energy (from 7 GeV to 6 GeV for the APS) on the photon energy spectra can be minimized by choosing shorter period lengths for the SCUs;
- Both horizontal and vertical polarizing SCU devices are possible (with a round beam chamber);
- A 1.1-m long magnet developed for SCU1, could be a building block for long SCUs (two or even three magnets in one cryostat).
- A 1.5-m long magnet is being developed as part of LCLS SCU R&D (described later).

Helical SCUs become possible:

- Helical undulators can be built;
- Universal helical undulator is feasible (next slide).

Universal undulator for MBA lattice

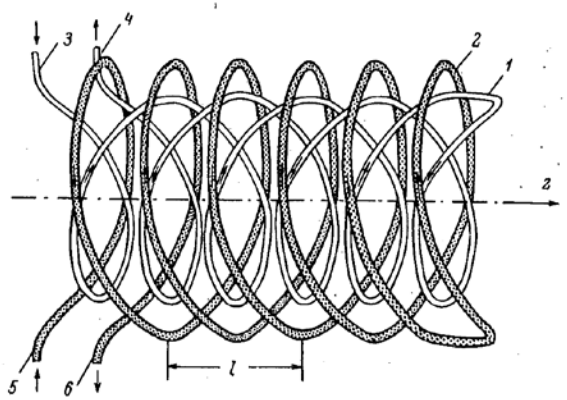

FIG. 2. Schematic diagram of a helical undulator.

D. Alferov, Yu. Bashamkov, and E. Bessonov "Generation of circularly polarized electromagnetic radiation," Zh. Tekh. Fiz 46, 2392-2397, November 1976.

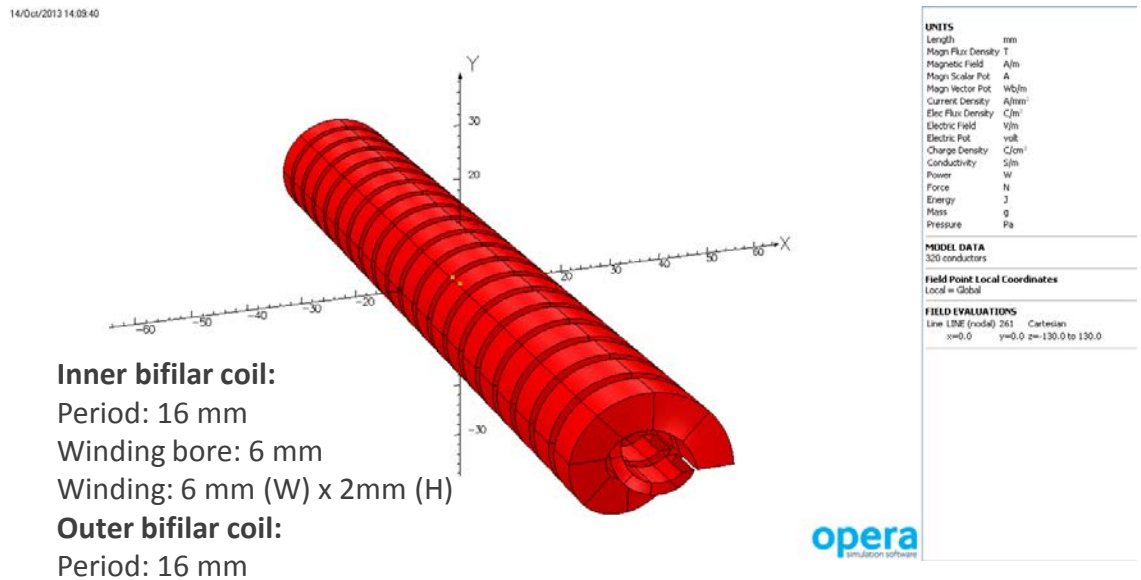

Inner bifilar coil:
Period: 16 mm
Winding bore: 6 mm
Winding: 6 mm (W) x 2mm (H)
Outer bifilar coil:
Period: 16 mm
Winding bore: 11 mm
Winding: 6 mm x 6 mm

Inner Coil	Outer Coil	Field Configuration
J = 795.6 A/mm^2	0	**Helical** B_y =0.68 T, B_x = 0.68 T
0	J = 1184.5 A/mm^2	**Helical (opposite helicity)** B_y =0.68 T, B_x = 0.68 T
J =795.6 A/mm^2	J = 1184.5 A/mm^2	**Vertical** B_y = 1.36 T, B_x = 0
J = - 795.6 A/mm^2	J = 1184.5 A/mm^2	**Horizontal** B_y = 0, B_x = 1.36 T

This is a truly universal undulator that can create both planar and helical fields.
Switchable polarization can be realized.

Y.Ivanyushenkov, "SCUs for Next Generation Storage Rings", DLSR Workshop, APS, November 19-21, 2014

Superconducting undulators for FELs

Helical undulator structure

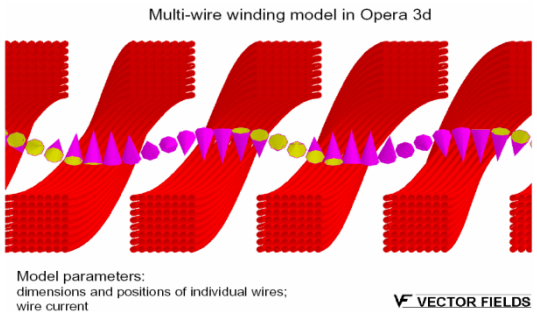

Free electron lasers started in the 1970s with this superconducting undulator:

Superconducting helically wound magnet for the free-electron laser

L. R. Elias and J. M. Madey

High Energy Physics Laboratory, Stanford University, Stanford, California 94305

(Received 12 April 1979; accepted for publication 18 May 1979)

Rev. Sci. Instrum. 50(11), Nov. 1979.

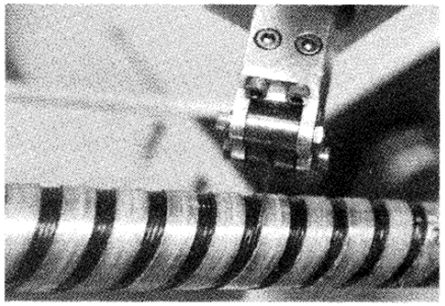

FIG. 5. Wire winding tool and partially completed magnet.

The 4-m long superconducting helical undulator has been built in the UK as a part of the ILC positron source project

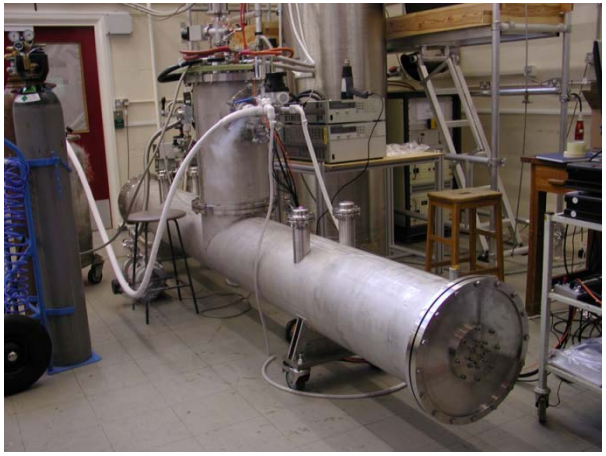

D.J. Scott et al., Phys. Rev. Lett. 107, 174803 (2011).

In principle, SCUs could already be employed in FELs

A long line of hybrid undulators in the LCLS Undulator Hall

Picture from *SLAC Today,* March 30, 2009

http://today.slac.stanford.edu/feature/2009/lcls-21-undulators.asp

SCU prototype for LCLS

- **Collaboration SLAC/LBL/ANL on LCLS SCU R&D [1]**
  Goal: Build and test in a horizontal cryostat Nb_3Sn and NbTi 1.5-m long magnets by late summer 2015

- ANL deliverables:
  - NbTi magnet (21-mm period, 8-mm magnetic gap);
  - Cryostat of SCU0/SCU1 type.
- LBL deliverables:
  - Nb_3Sn magnet (19-mm period, 8-mm magnetic gap);
  - Tuning system.

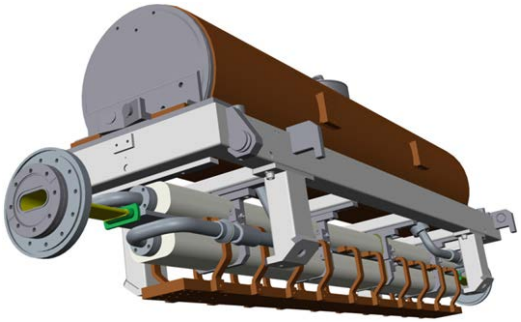

LCLS SCU prototype cold mass design model

- **Status of work at APS/ANL:**
- Cryostat design is chosen (SCU0/SCU1 type);
- Cryostat is being fabricated;
- Cold mass is being fabricated.

Possible LCLS SCU line
Courtesy J. Fuerst, APS

[1] P. Emma et al., "A plan for the development of superconducting undulator prototypes for LCLS-II and future FELs," Presented at FEL2014, Basel, August 2014.

Conclusions

- Superconducting undulators produce higher magnetic fields than other undulator technologies. As a result, higher photon fluxes could be generated.
- Building an SCU is a challenging task. Solutions do exist and have been successfully demonstrated in the SCU0 at the APS.
- A longer magnetic structure will be used in SCU1 that is currently being built.
- New MBA lattices bring challenges as well as opportunities. A round electron beam of the MBA lattice makes possible helical devices including a truly universal superconducting undulator.
- SCU technology could be beneficial for both light sources and FELs.