diamond

Vacuum Design of the Diamond Light Source Double-Double Bend Achromat (DDBA) Project

Matthew Cox
Head of Vacuum Group
Diamond Light Source, UK

matthew.cox@diamond.ac.uk
www.diamond.ac.uk

Diamond Light Source

- UK National Synchrotron Light Source, located near Oxford
- Operating since 2007
- 3 GeV 561.6 m 24 cell electron storage ring
- 300 (500) mA
- DBA lattice - 2.7 nm.rad emittance
- 32 beamlines in operation, construction or design

Why DDBA?

Need for additional insertion devices → Double Double Bend Achromat (DDBA) concept: Replace one or two "DBA" cells with a new "DDBA cell" creating a new mid-cell straight section for an Insertion Device, thus converting a BM beamline into an ID beamline.

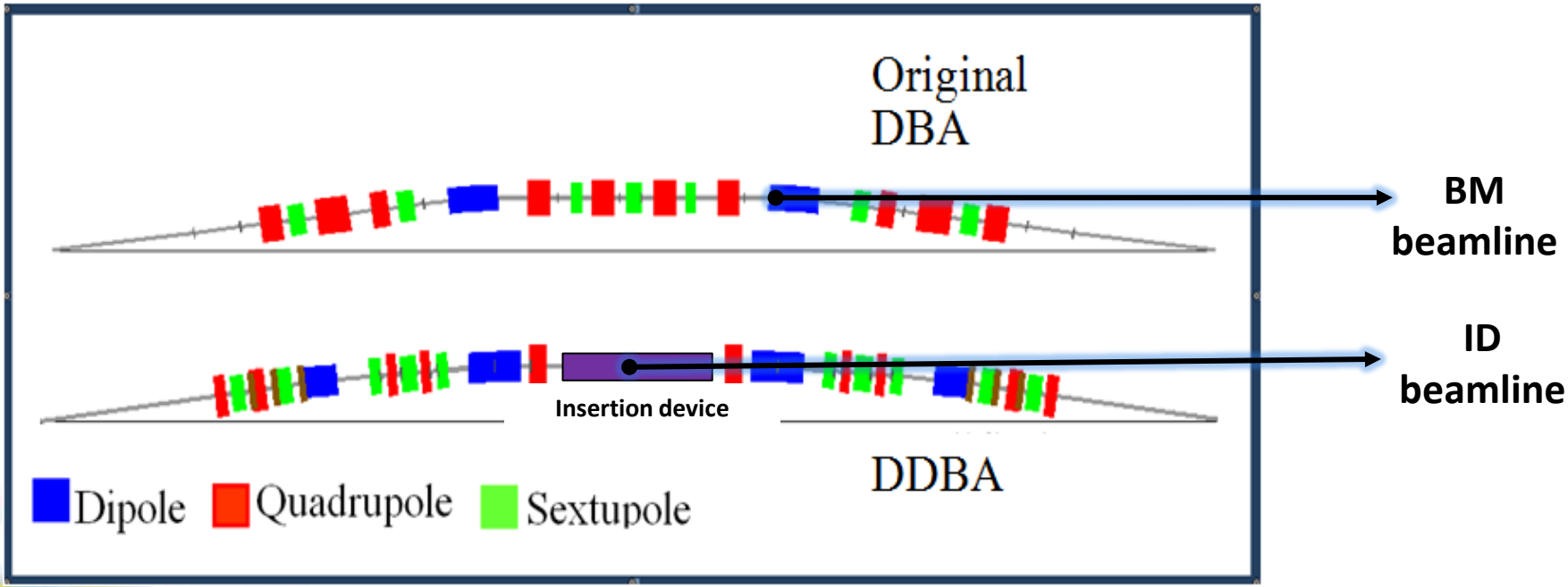

+ Development of technology needed for a possible future major upgrade, Diamond-II

Timescales

Overall

- Install one cell of DDBA in late Summer 2016 in an 8-week shutdown
- Plus a possible second cell in 2018

Vacuum vessels

- Contract placed Aug 2014
- Final Design Review Jan 2015
- Deliveries Sept 2015

Magnets

- Contract placed June 2014
- Final Design Review Nov 2014
- Deliveries Oct 2015

Magnets

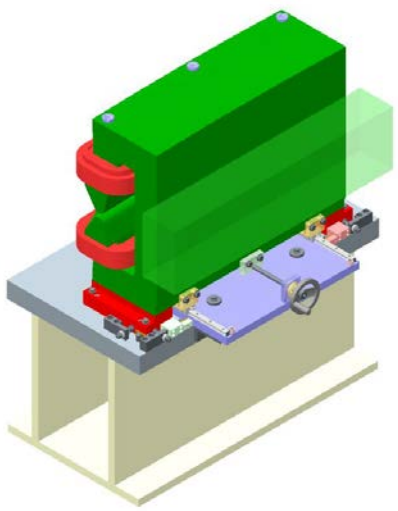

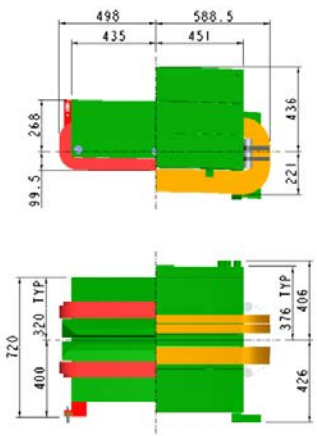

Combined function dipole 0.8T
and quadrupole -14 T/m
Pole gap 30mm

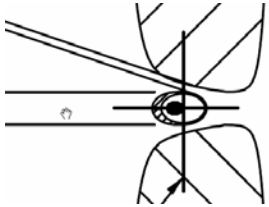

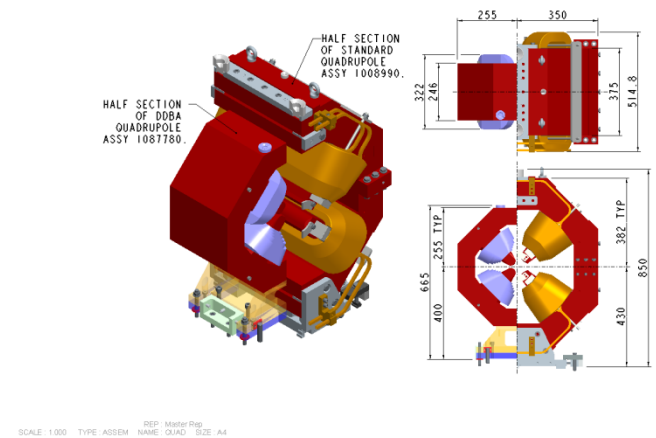

Quadrupole 70T/m
Inscribed radius 15mm

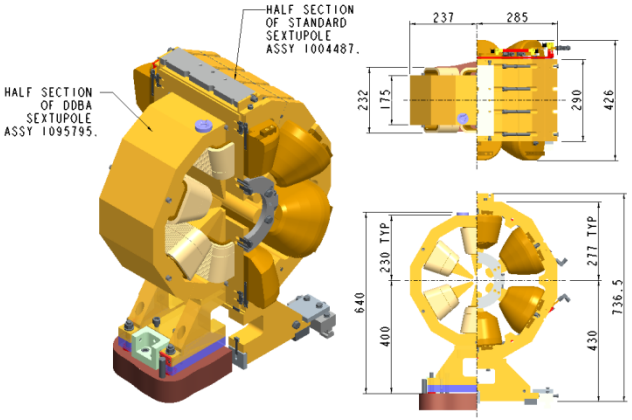

Sextupole 2000T/m^2
Plus AC corrector coil
windings
Inscribed radius 15mm

J. Kay
MEDSI 2014

Vacuum requirements

- CO equivalent $p \leq 10^{-9}$ mbar with stored beam (Z^2 weighted sum of partial pressures)
- Beam compatible: Impedance, Beam stay clear, RF heating, DC/AC magnets, SR heat loads ...
- No pressure bursts or particles to trip beam
- Installation in a working machine + beam conditioning $\leq$ 8 weeks downtime

Decisions taken

- Vacuum vessels typically 18 x 27 mm ellipse
- Distributed and lumped photon absorbers
- No NEG coatings
  - Initially planning full NEG coating approach (best vacuum performance)
  - Redesign without NEG coating (one / two cells - cost, timescales, R&D effort , risk ...)
  - Discrete ion pumps (3) and NEG cartridge pumps (7)
- Vessel materials
  - Copper alloy - high power densities
  - Stainless steel – lower power densities, corrector magnets, bellows, BPM units
  - Elliptical tubes in SS-316L and Cu-OFS delivered
- Build sequence
  - Complete girders built up and baked outside the storage ring and installed without venting or re-baking
  - Possibility of in-situ bakeout with magnet tops removed for recovery

Existing (DBA) Arc Layout

Straight section
18 x 5.3m
6 x 8.3m

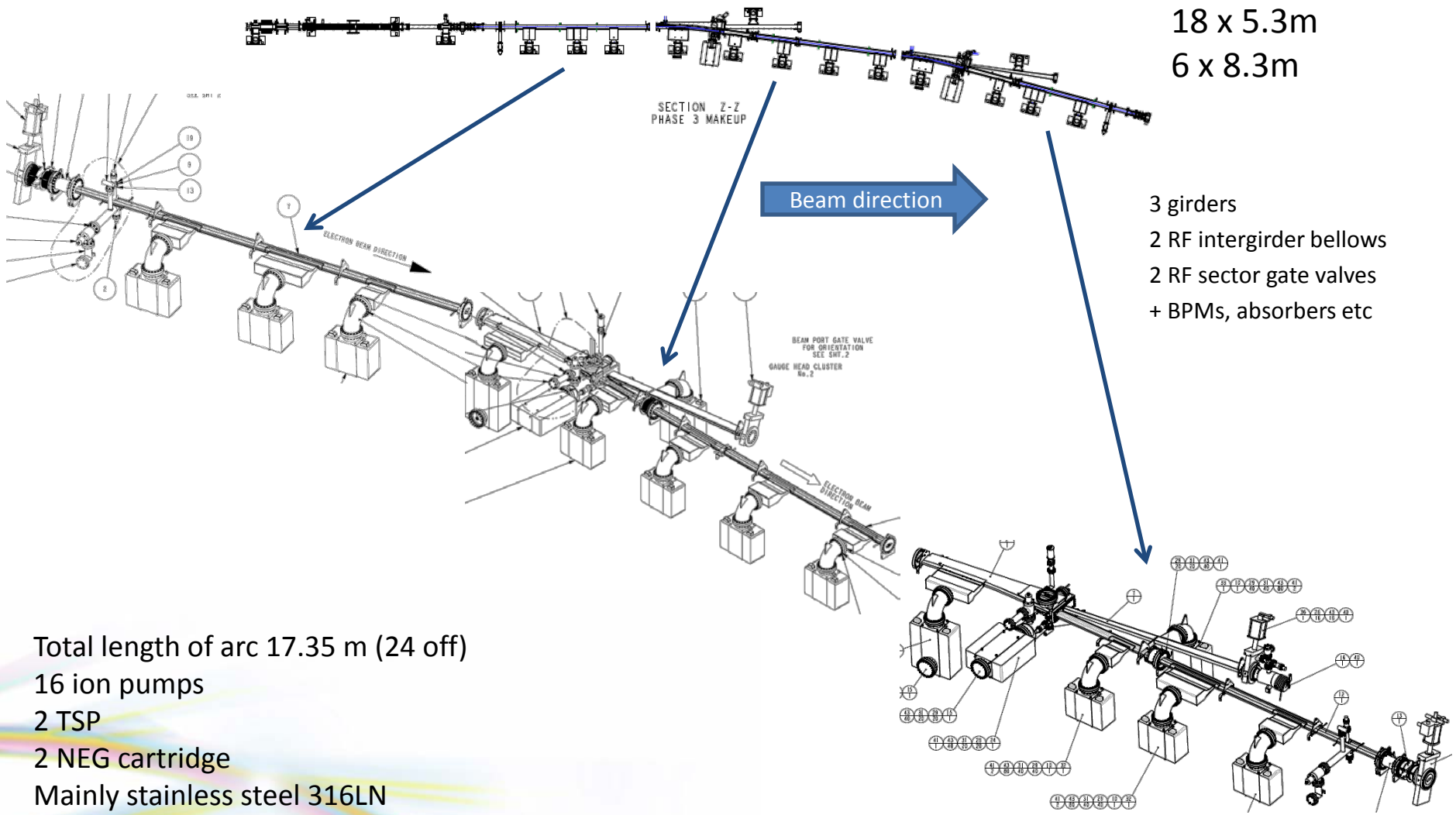

3 girders
2 RF intergirder bellows
2 RF sector gate valves
+ BPMs, absorbers etc

Total length of arc 17.35 m (24 off)
16 ion pumps
2 TSP
2 NEG cartridge
Mainly stainless steel 316LN
4 IMGs
2 RGAs

New DDBA Arc Layout

Photon beam extraction at crotch 1 and 3 only

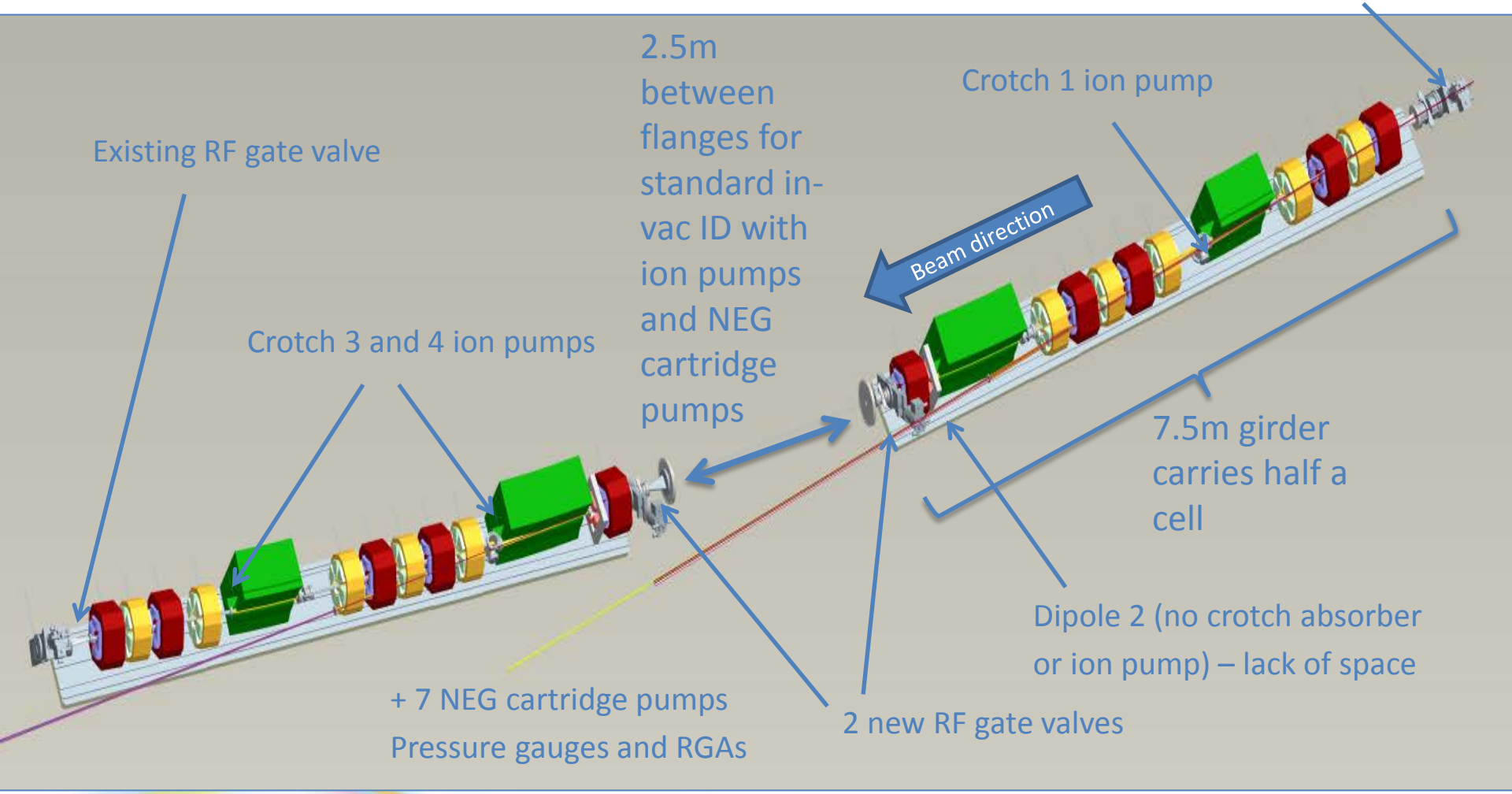

Some Simulation / Modelling Tools

Engineering FEA	Mechanical	ANSYS
	Thermal	ANSYS
SR Ray tracing	2D semi manual	AutoCAD
	3D	In-house code in development
Vacuum pressure modelling	Analytical	In-house code (Pressure Profile)
	Monte-Carlo Test Particle	In-house code (MCTPVac)
		MolFlow+ (Synrad+ ?)
	Angular coefficients	Comsol Multiphysics (also ray tracing?)
	• No codes ideal • Ray tracing / pressure modelling cycle is labour intensive • Lack of reliable vacuum material data (PSD vs dose, x-ray energy, incidence angle scattering/reflection etc) • Few fundamental studies of beam conditioning surface processes	

NEG cartridge pump interface studies

- Elliptical tube 27 x 18 internal x 1 mm WT
- 8 pumping slots 3 mm wide x 33.5 mm long
- Compromise between vacuum pumping and beam impedance
- NEG cartridge SAES Getters Capacitorr D400-2
- Does not pump CH_4 or inert gases

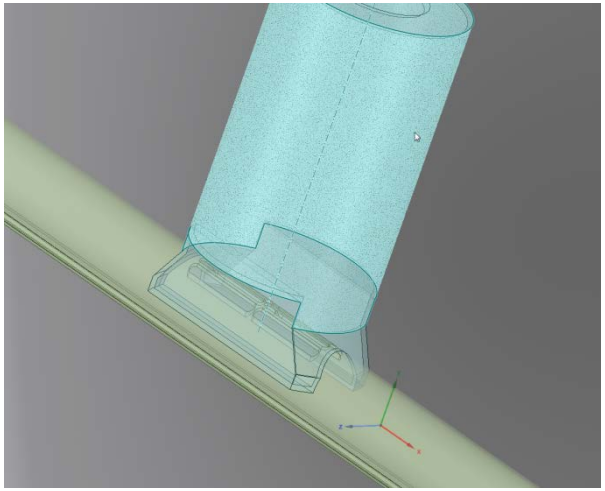

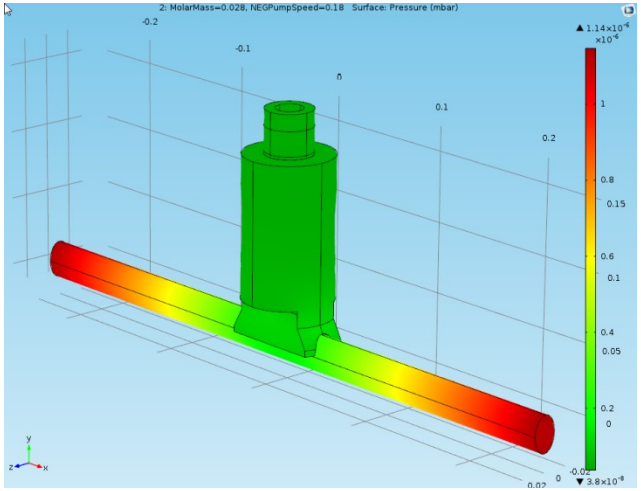

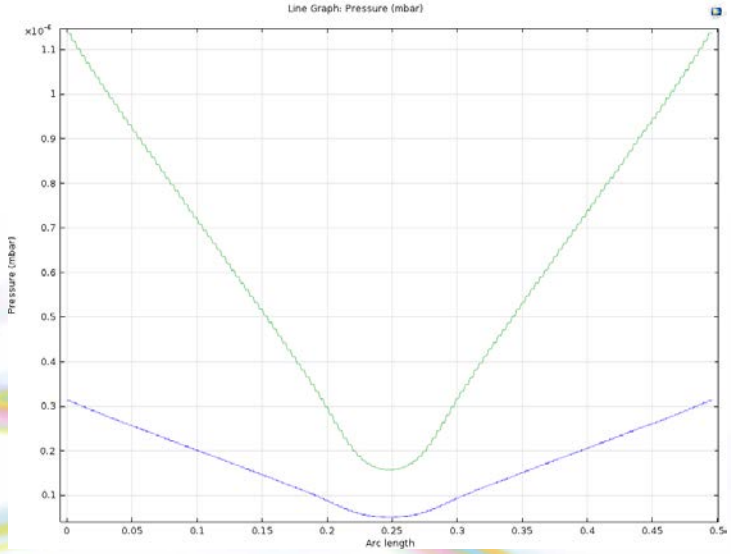

Comsol fmf results	H_2	CO
Naked NEG cartridge pump speed	400 l/s	180 l/s
Gas flow in	1E-5 mbar l/s	1E-5 mbar l/s
P in pump body	2.21E-8 mbar	4.88E-8 mbar
Effective pump speed within pump body	452 l/s	205 l/s
P at pump port	5.32E-8 mbar	1.65e-7 mbar
Effective pump speed at beam tube	188 l/s	61 l/s

Calc pressure profile 100Ah no NEG coating

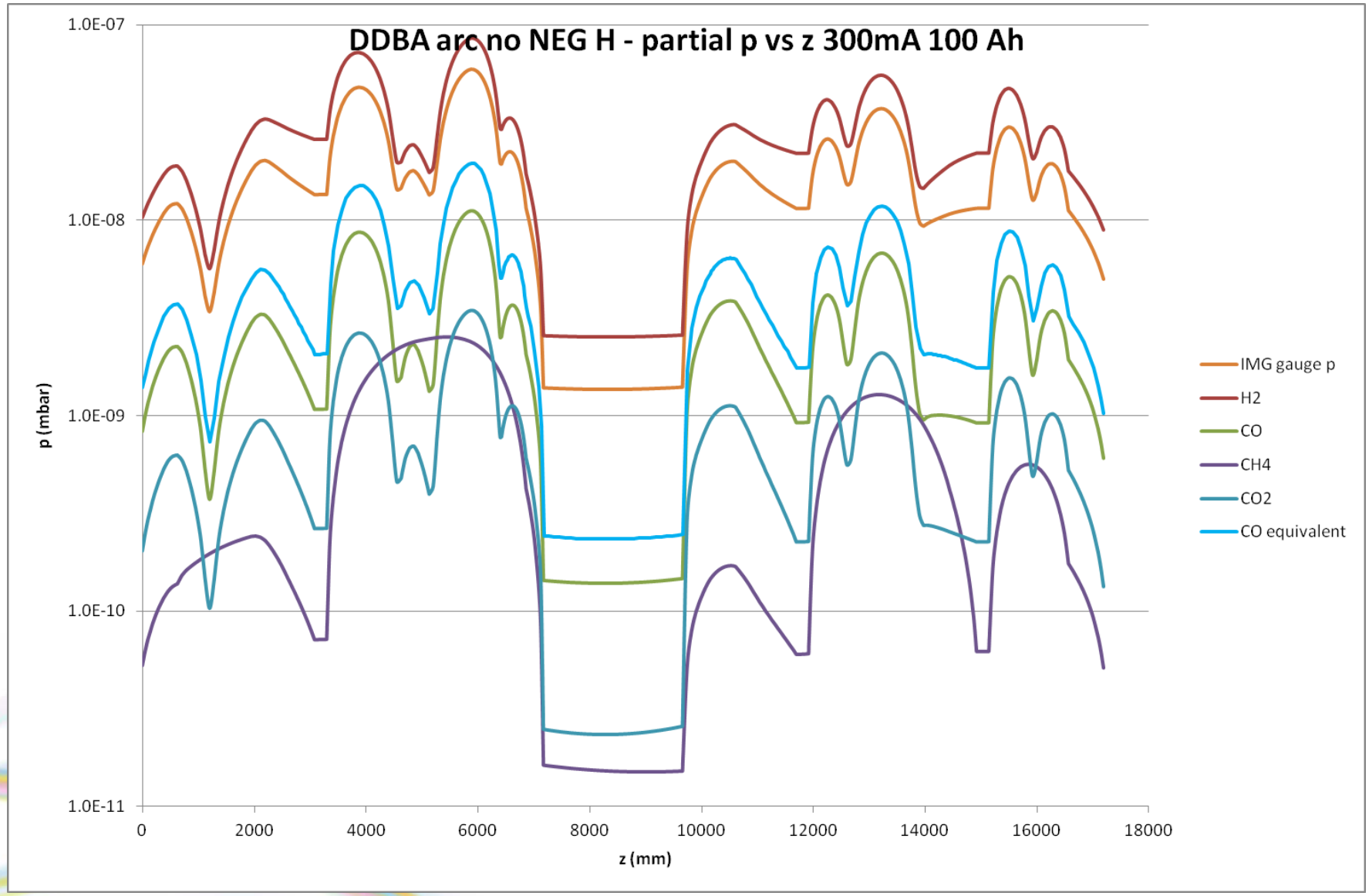

Calc pressure profile 1000Ah no NEG coating

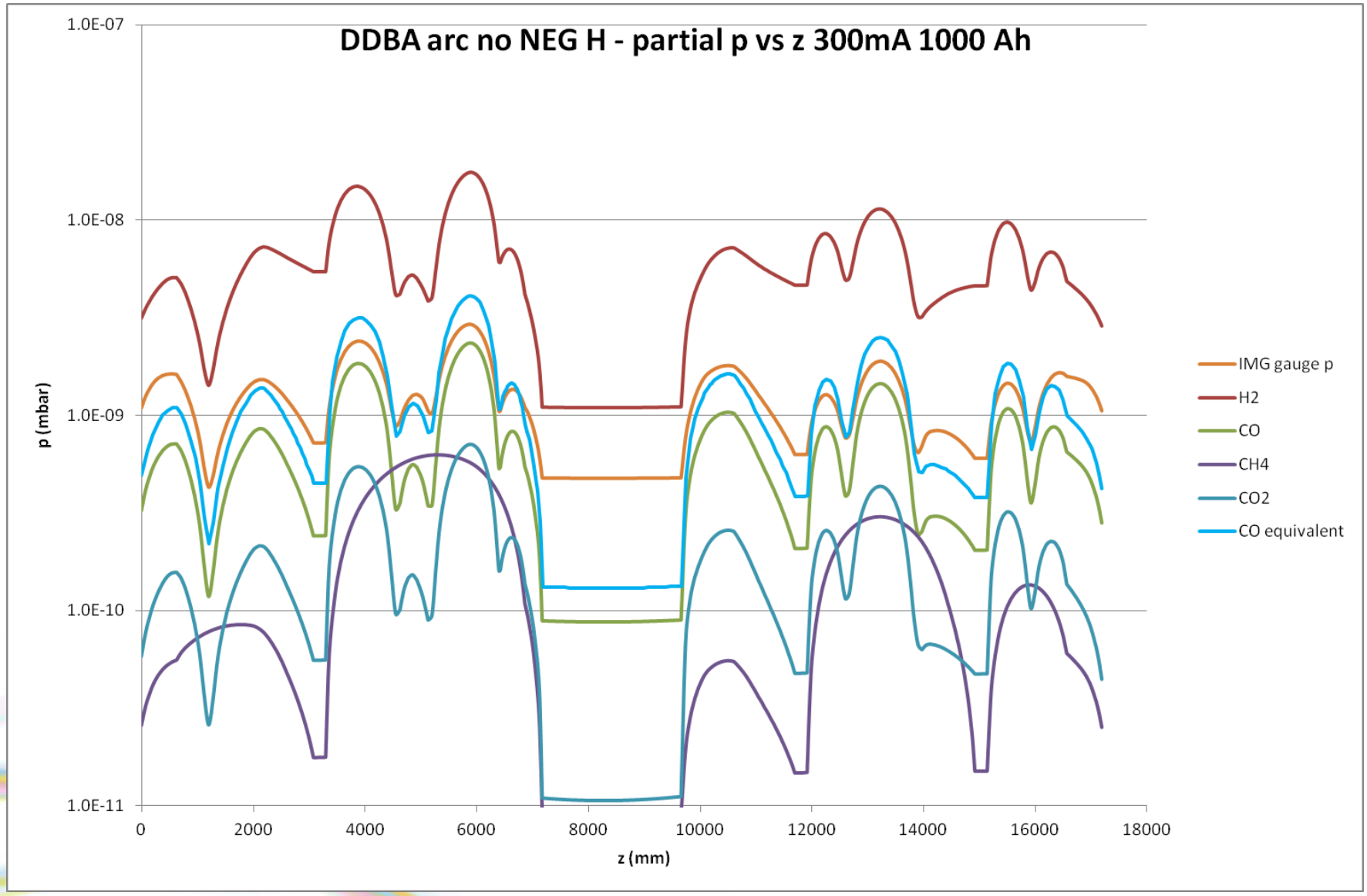

Calc beam conditioning no NEG coating

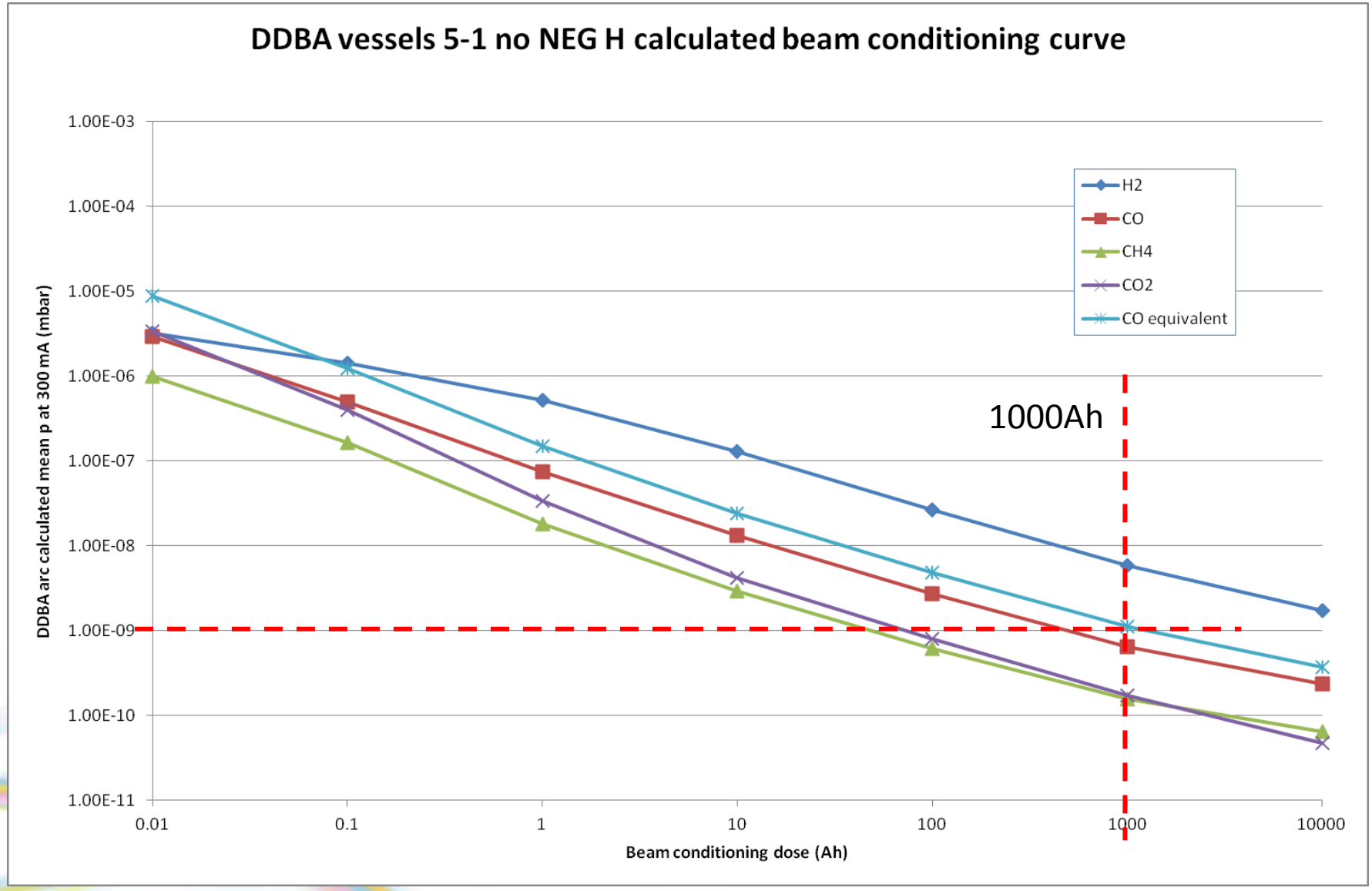

I_{beam} = 300mA

Calc beam conditioning NEG coating

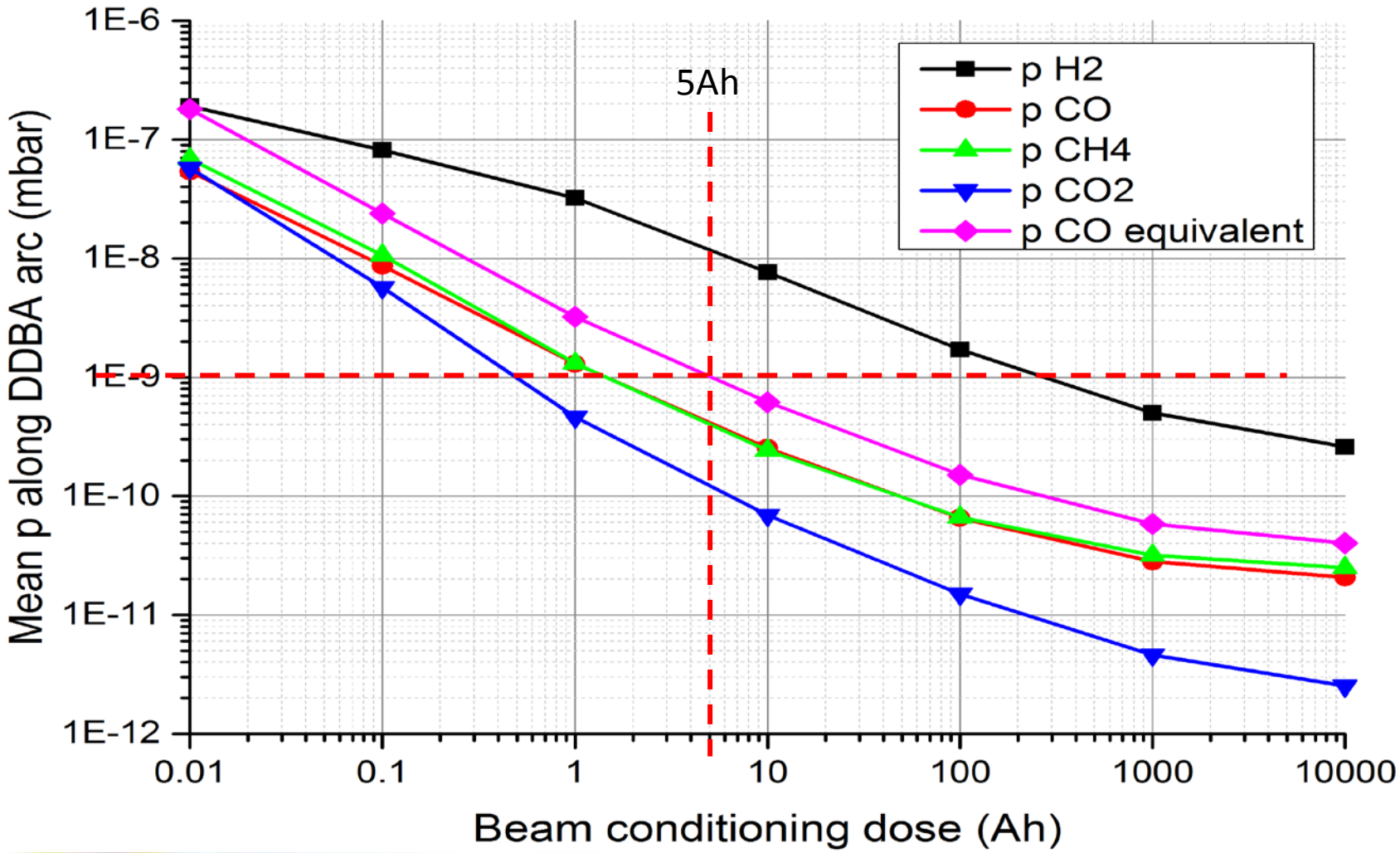

I_{beam} = 300mA

Vacuum vessels (WIP)

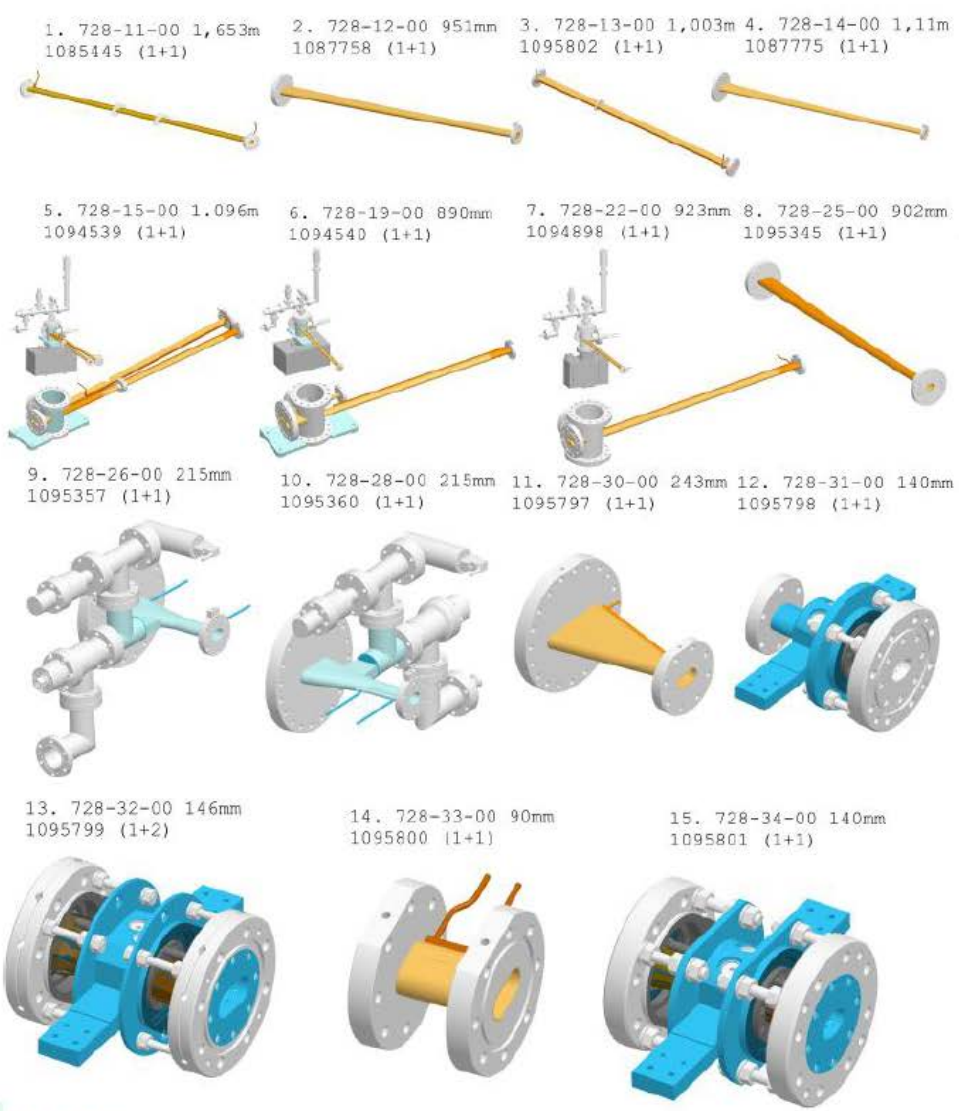

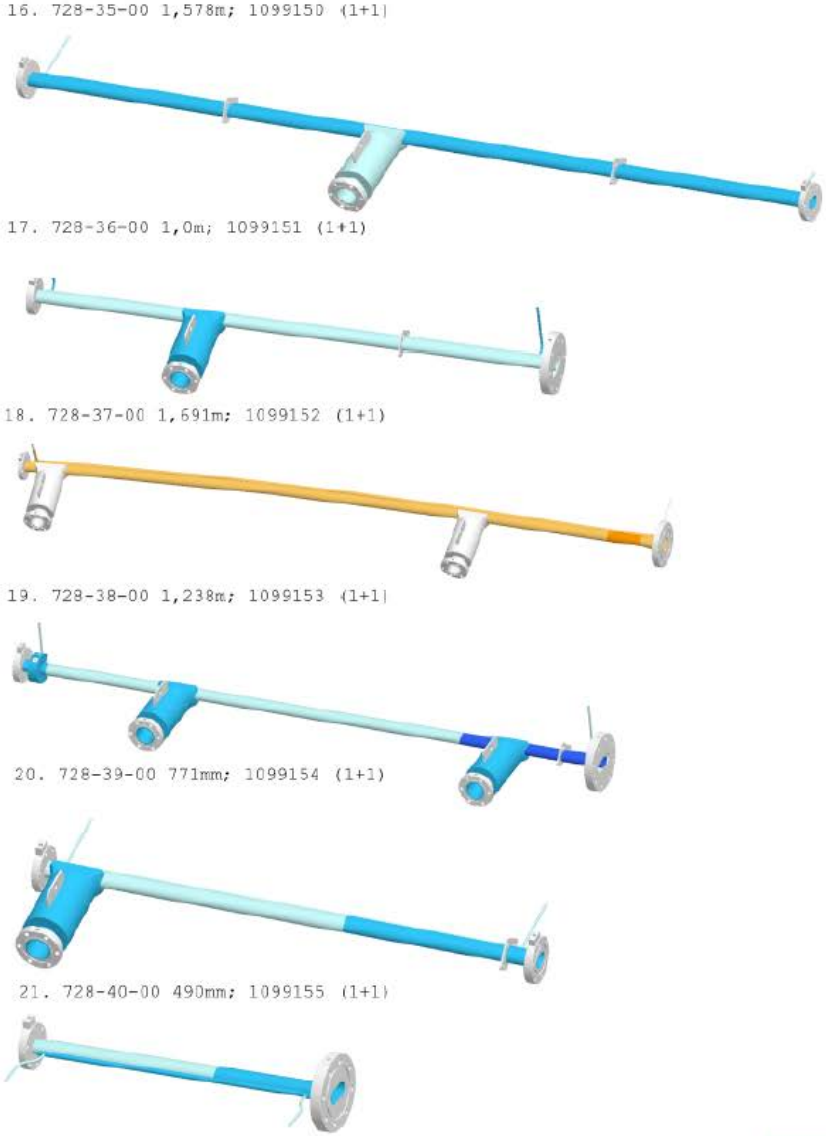

29.09.2014

Dipole 1,3,4 vessels (WIP)

Copper
Antechamber to allow SR - BM (+ ID for dipole 1 and 3) to exit to downstream crotch
No water cooling needed

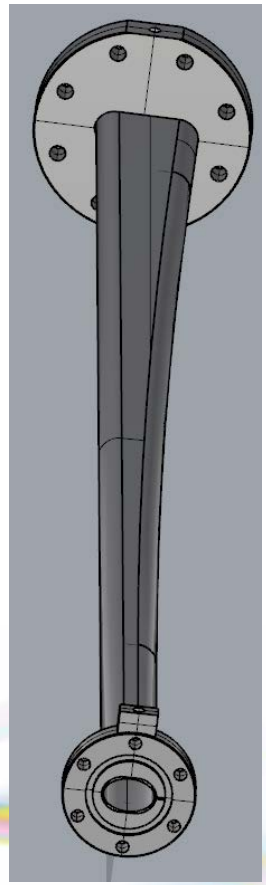

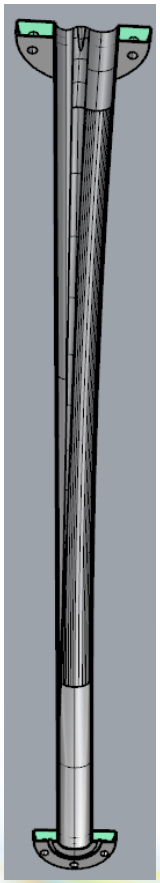

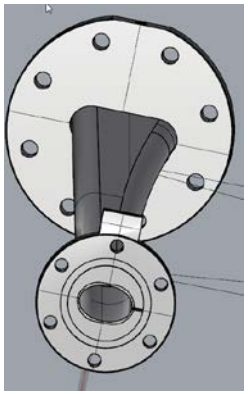

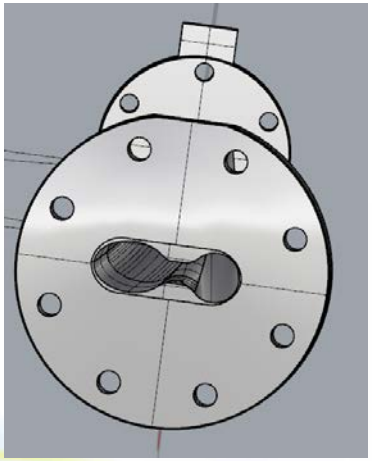

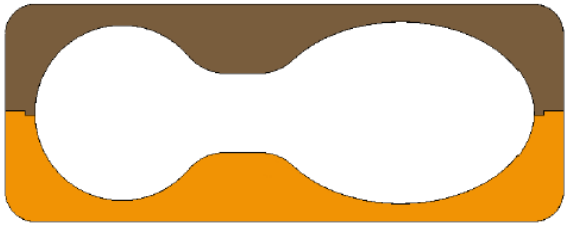

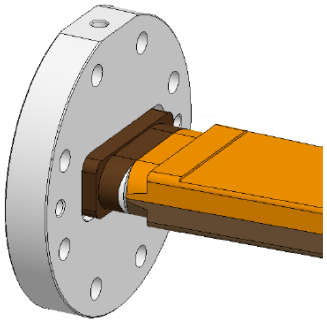

Manufacturing idea to reduce distortion:
Machine 2 halves
E-beam weld together
Vacuum braze adapter into flange
E-beam weld vessel to flange adapter

Crotch 1,3,4 assembly (WIP)

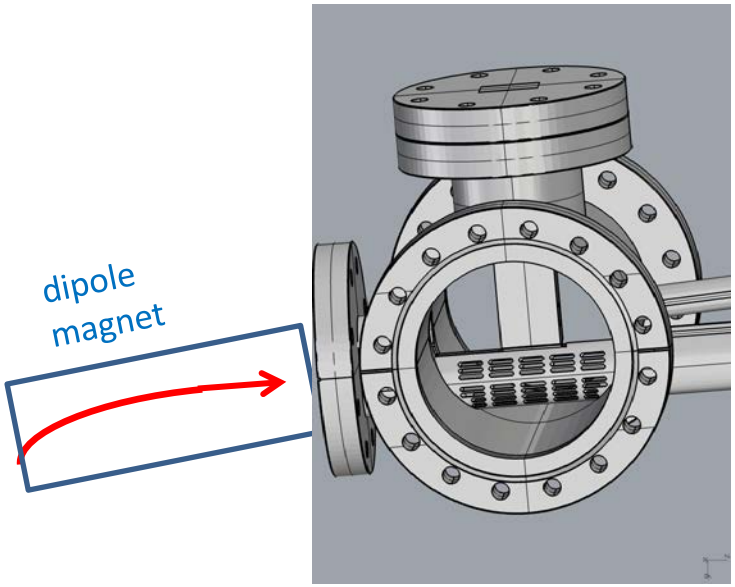

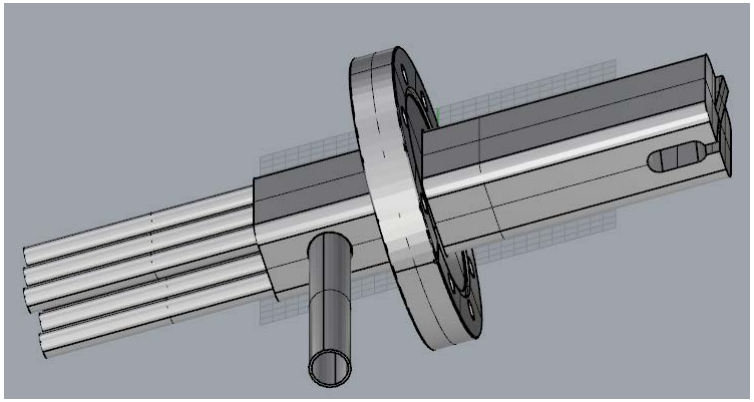

Crotch absorber
Copper, vacuum brazed (similar to Diamond existing)
Crotch 4 no beam through hole

Manufacturing idea to reduce distortion
Machine central part
Vacuum braze inlet adapter / flange
Vacuum braze exit tube assemblies
TIG weld remaining tubes/flanges
TIG weld 3 main parts together

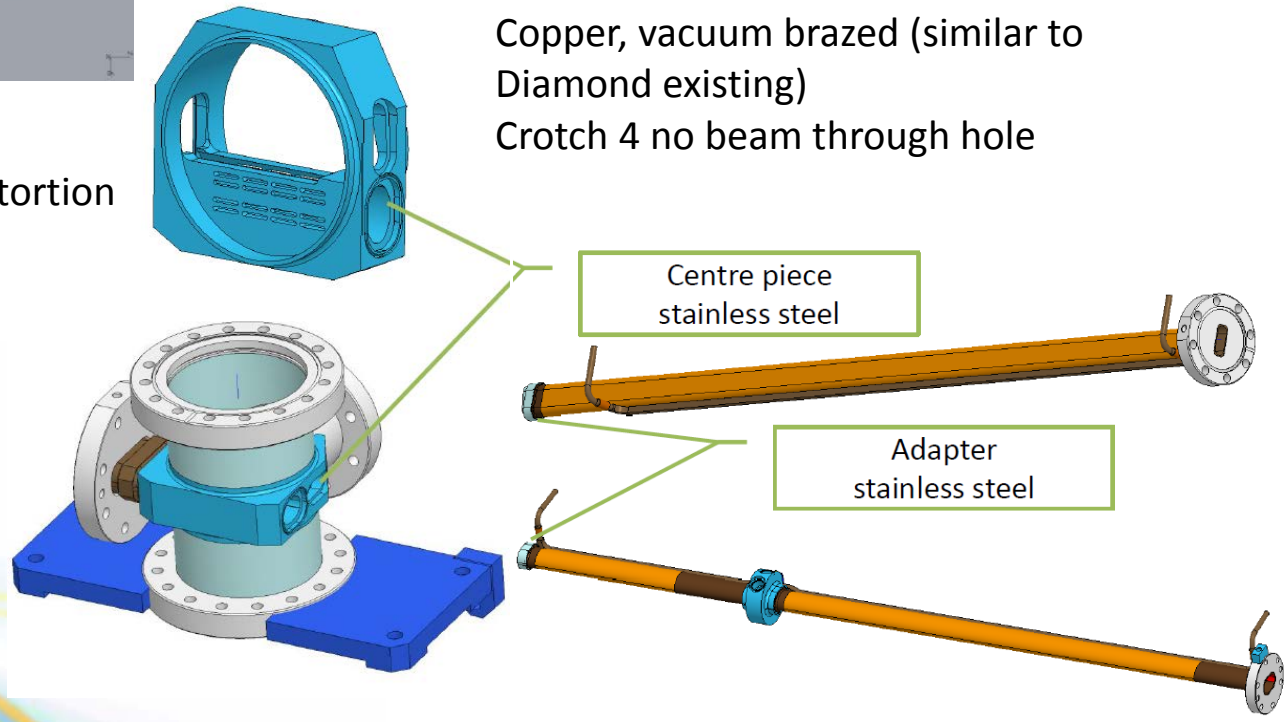

Dipole 2 vessel and straight vessels (WIP)

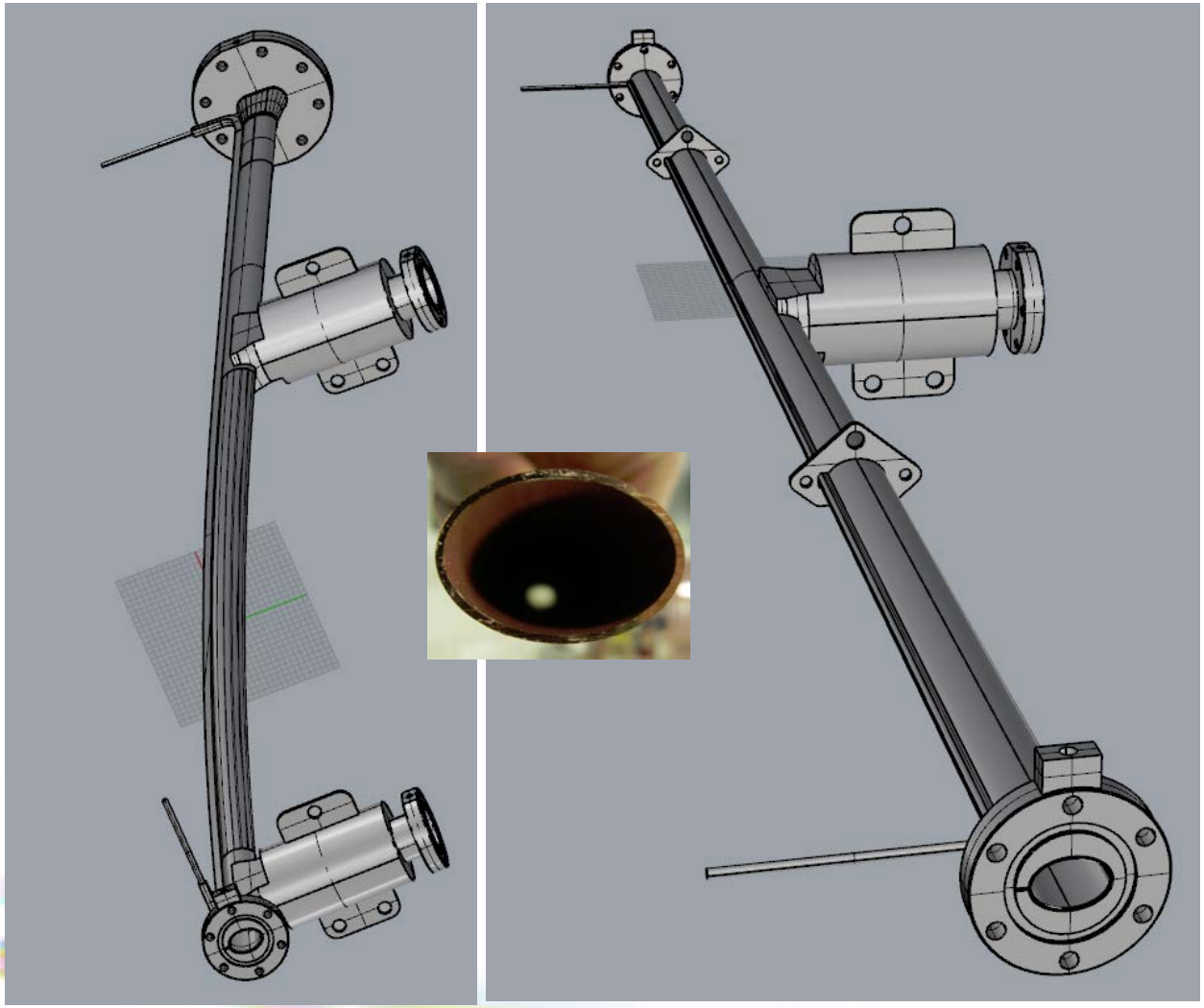

- Copper / stainless steel elliptical tube
- E-beam welded external water cooling channel
- NEG cartridge pump ports
- Internal cooled bumps to shield flange joints from SR

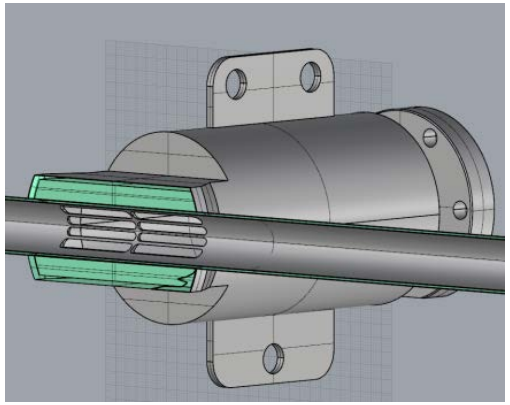

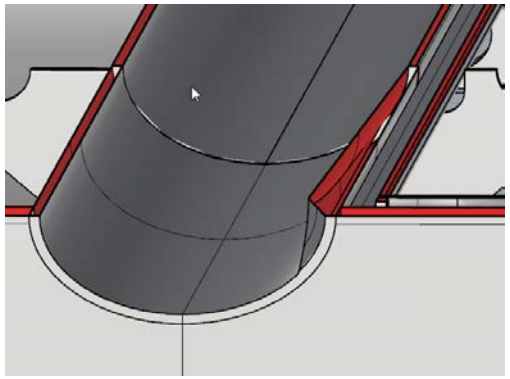

RF Bellows (WIP)

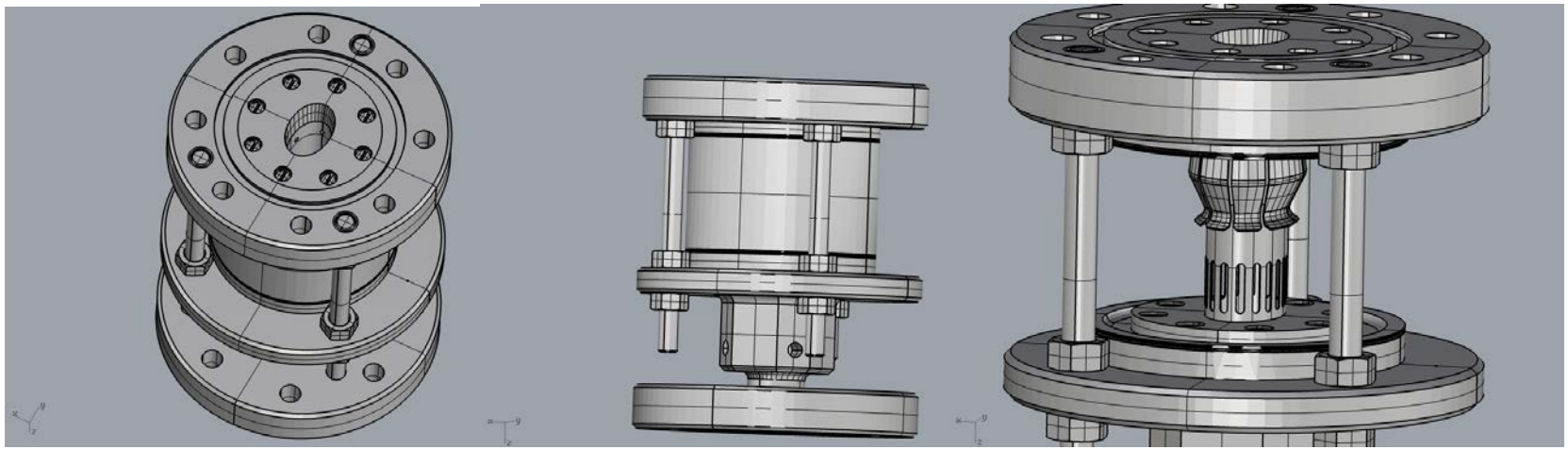

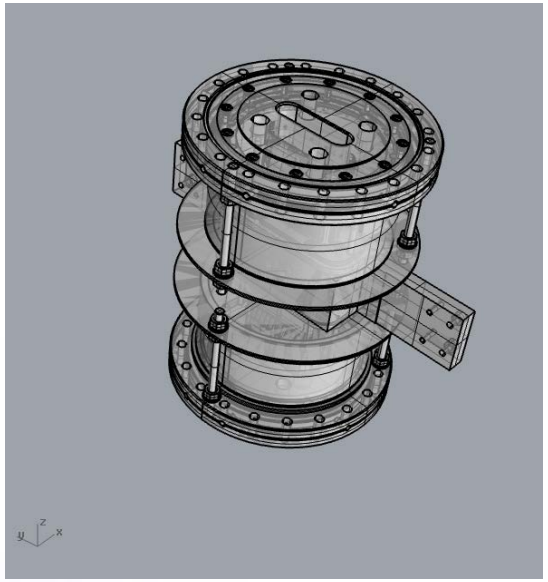

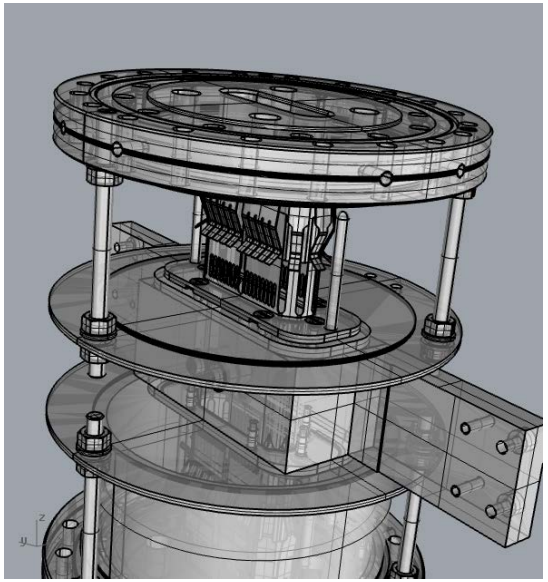

Similar to existing designs at Diamond ... with scaling
Details and materials TBD

BPMs (WIP)

Improved design compared with previous BPM buttons at DIAMOND to reduce RF heating

Existing 10.7mm DLS button

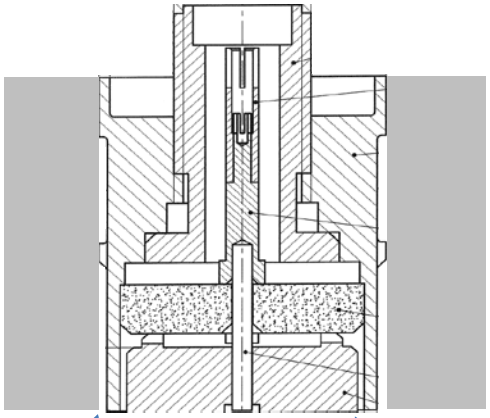

Outer gap between shroud and vessel

Inner gap around button

6mm button – new ESRF type

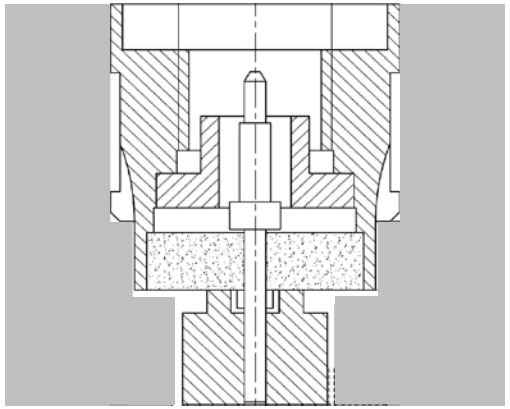

Only one gap between button and vessel

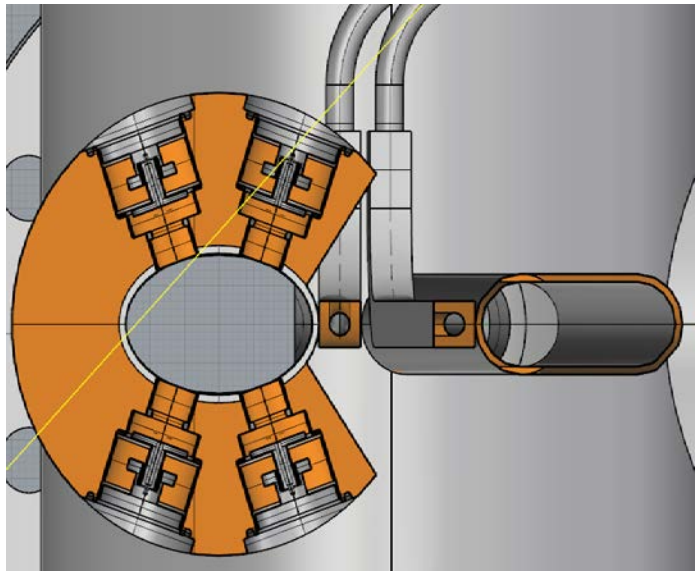

Crotch 1 vessel BPM station
Cut away to avoid water cooling and x-ray leg

RF Compatible Flanges (WIP)

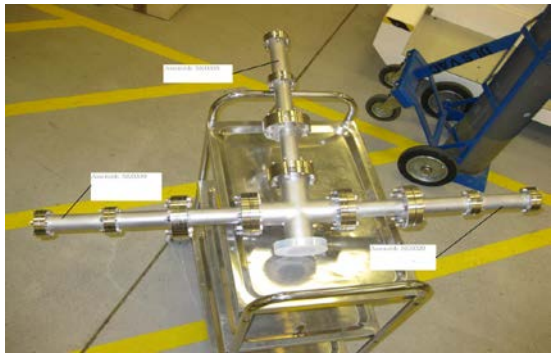

Test setup

DN63CF

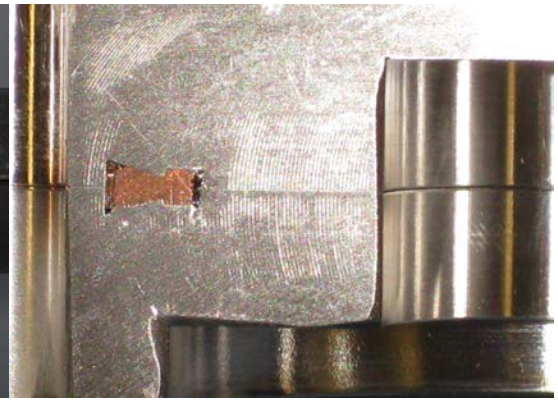

DN40CF

Helicoflex DN63

Requirements

- Low RF impedance (zero gap)
- Lateral alignment <100µm
- Reliable seal
- Tolerant to thermal cycling

Tested alignment, leak rate, thermal cycling:

- CF flange with spigot
- Helicoflex® "Standard"
- Helicoflex® "Delta"

Difficult to get zero gap with DN63CF. Wanted to avoid RF springs.

Helicoflex® Standard seal selected

Pros - reliable seal, low gap
Cons - cost, lead time, single source (but second source in sight)

Lateral alignment features in development

On-girder bakeout in magnet lower halves (WIP)

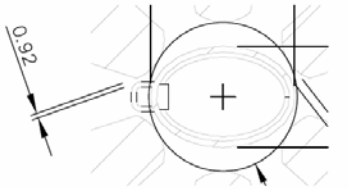

SEXTUPOLE POLE TIP CLEARANCE WITH COOLING CHANNEL

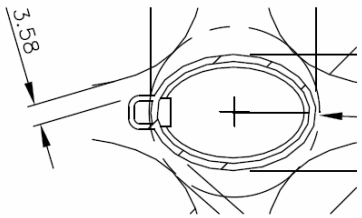

QUADRUPOLE POLE TIP CLEARANCE WITH COOLING CHANNEL

SEXTUPOLE

POLE 1	4.75mm
POLE 2	1.88mm
POLE 3	1.88mm
POLE 4	4.75mm
POLE 5	1.88mm
POLE 6	1.88mm

QUADRUPOLE

POLE 1	2.71mm
POLE 2	2.71mm
POLE 3	2.71mm
POLE 4	2.71mm

DIPOLE

POLE 1	3.10 mm
POLE 2	3.10 mm

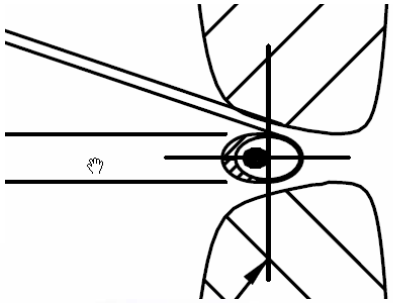

Requirements

- 200°C typical
- Temperature uniformity ±20°C (less critical than NEG coated vessels)
- If permanent -- radiation resistant
- If temporary -- easy to fit and remove

Current plan

- Kapton film heaters (clamped or wound) to vessels in magnet pole areas, remain in place
- Low emissivity overlayer, e.g. Aluminised Kapton
- Conventional heater tapes and insulation elsewhere, removable
- LV < 50V off ground

Lab trials in progress

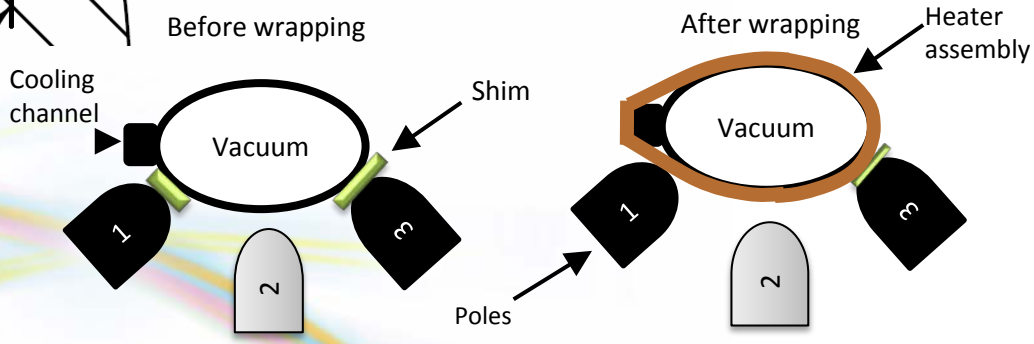

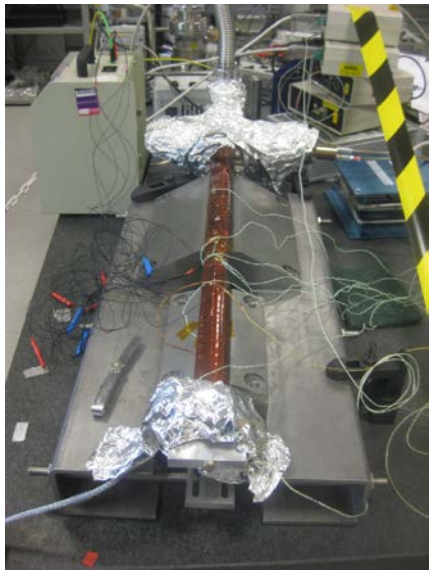

Build and installation strategy

- Fully tested and qualified vessels (250°C bakeout) delivered from supplier(s)
- Magnets aligned on girders and magnet tops removed
- Vessels assembled on to girders and magnet bottoms with vacuum equipment
- On-girder pump down, bakeout, magnet tops re-fitted
- Installation in the storage ring tunnel under vacuum without venting and without re-baking
- Connect up to adjacent vacuum sections and front end (re-bake these sections if necessary)
- Open gate valves, inject beam and carry out beam vacuum conditioning
- Possibility to re-bake in-situ if required (May need to remove magnet tops).

Thanks to ....

Diamond Technical Groups:

- Vacuum
- Engineering
- Accelerator Physics
- Controls
- Diagnostics
- Power Supplies