BAPS design and R&D

Qing Qin for the accelerator team of BAPS

Institute of High Energy Physics, CAS

中国科学院高能物理研究所
Institute of High Energy Physics

Outline

- General description
- Accelerator physics design
- Technical systems for R&D
- Summary

1. General Description

BEPC

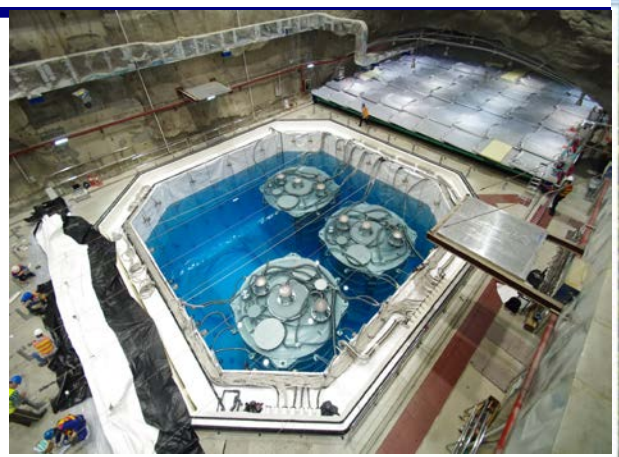

Daya Bay

CSNS

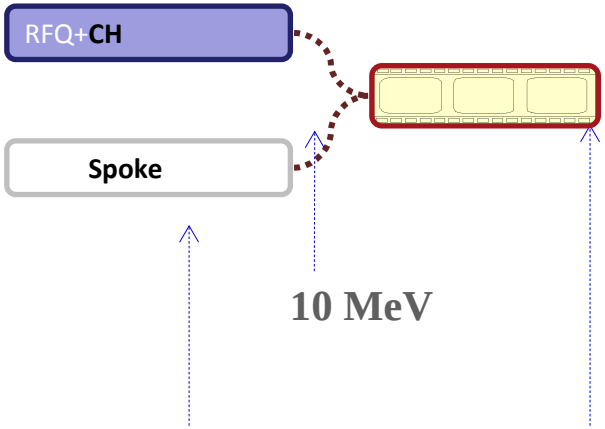

ADS

Yangbajing

BAPS

Beijing Electron Positron Collider (BEPC)
(1988 – 2005)

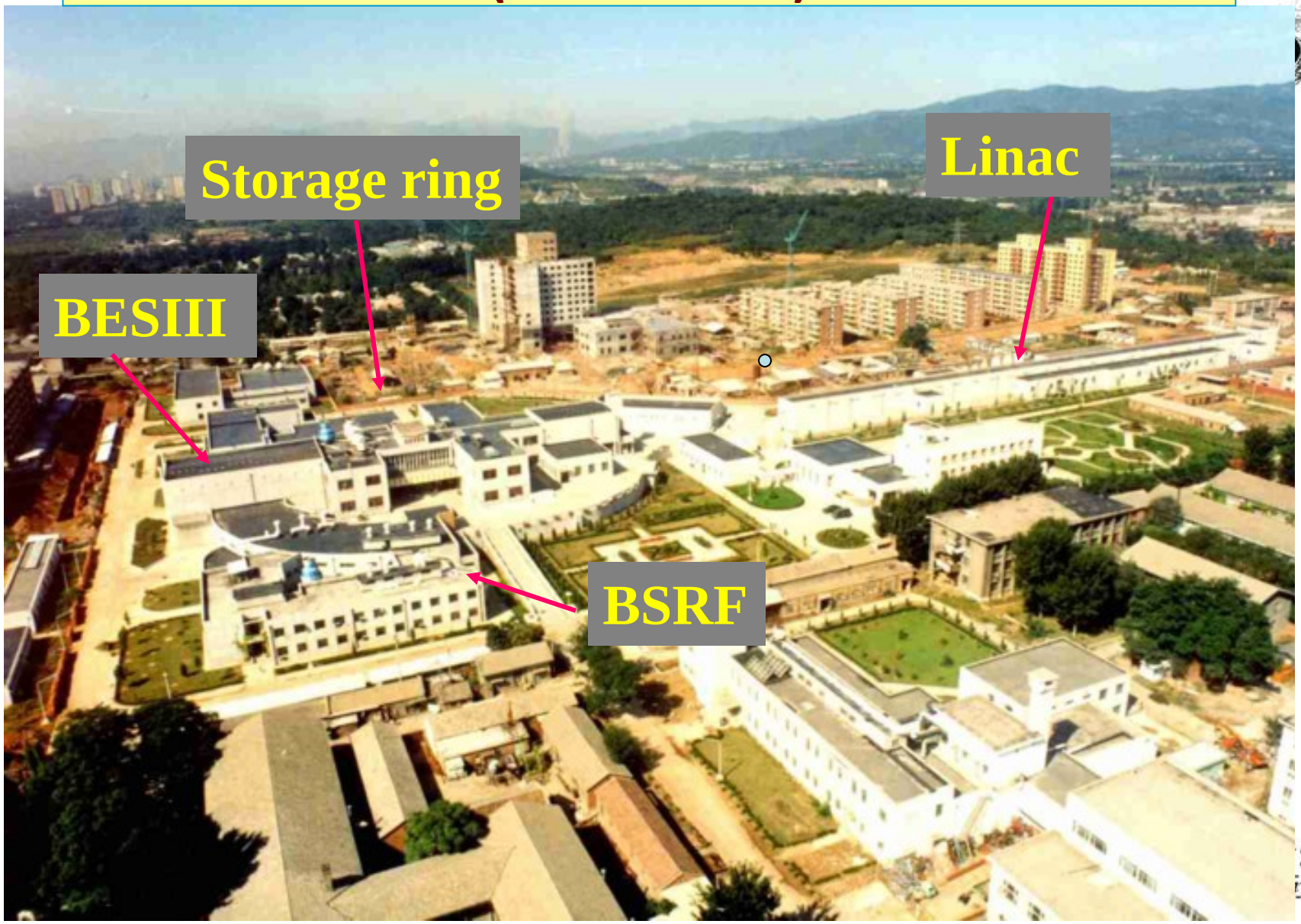

BEPCII & BSRF

BEPCII — An upgrade project of BEPC

— A double-ring factory-like machine

— Deliver beams to both HEP & SR

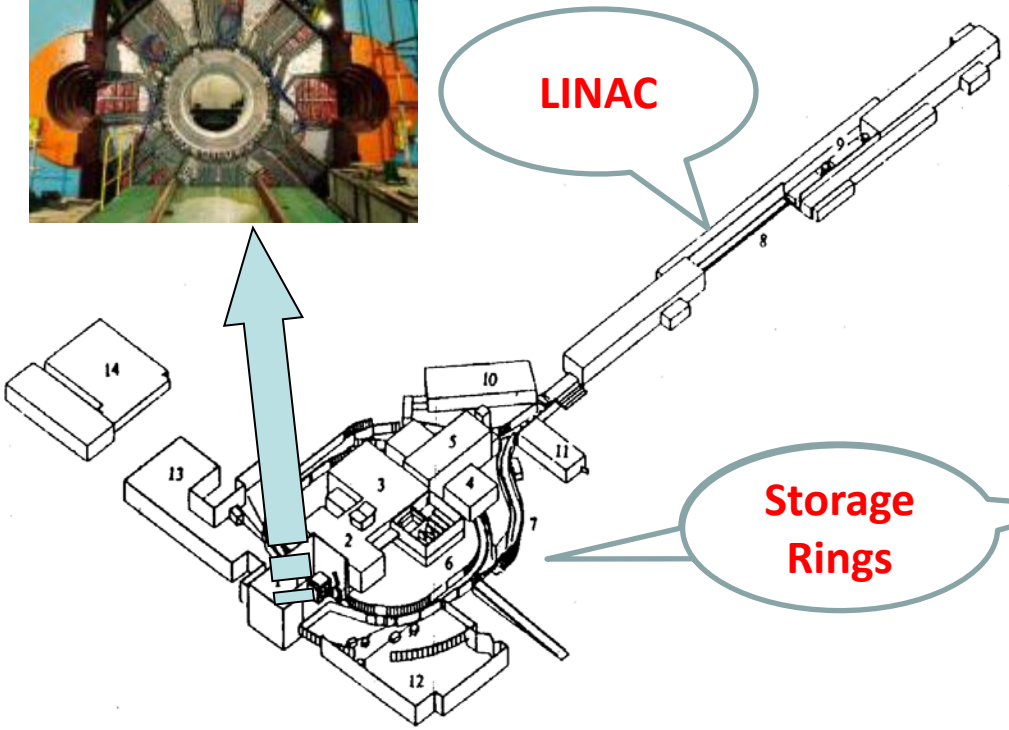

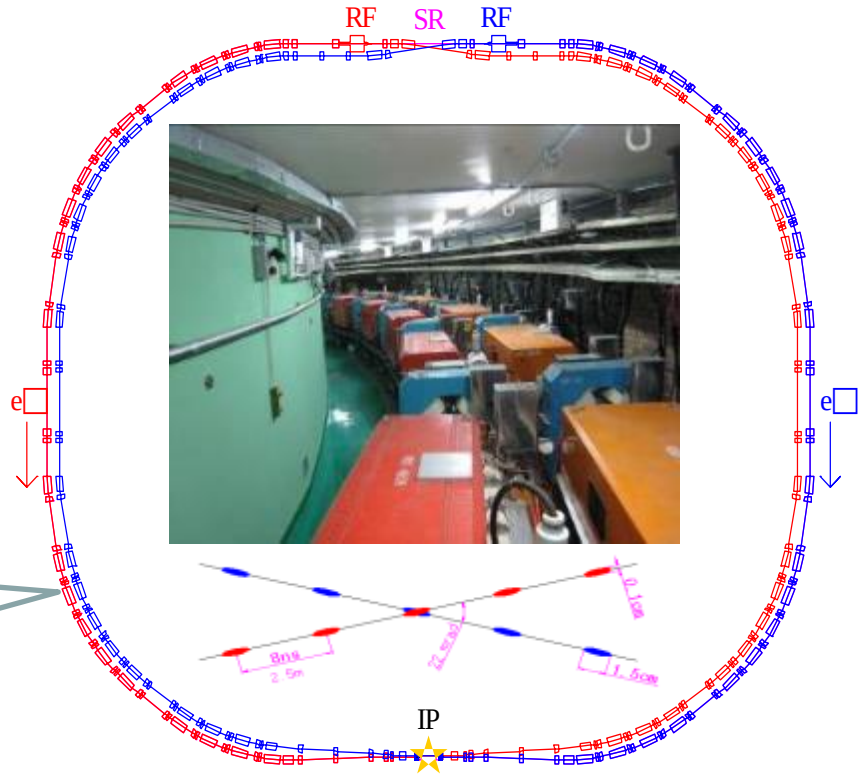

3-ring structure

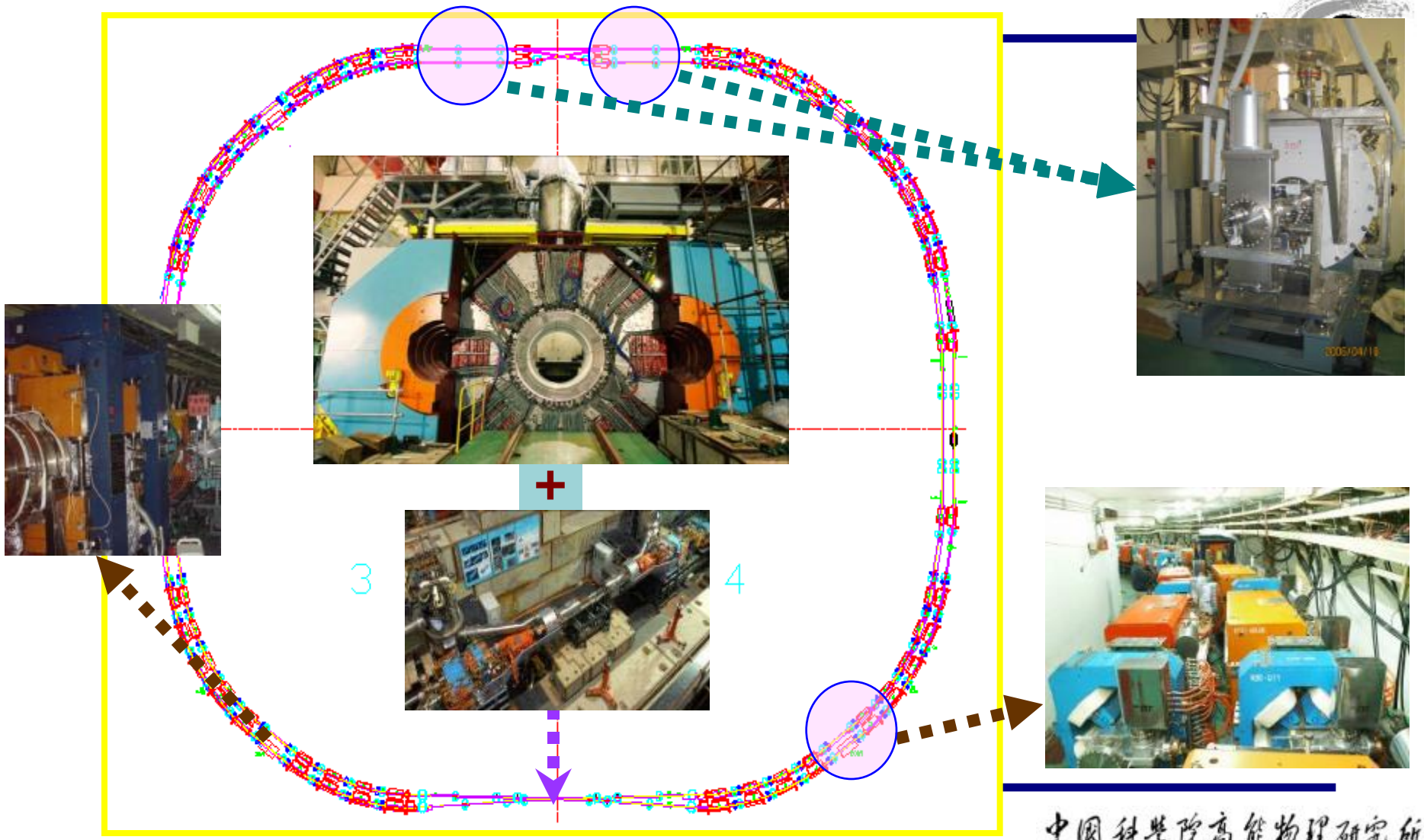

BSRF — upgraded with BEPC, 1st generation light source

3 exp. halls

14 beam lines

15 stations

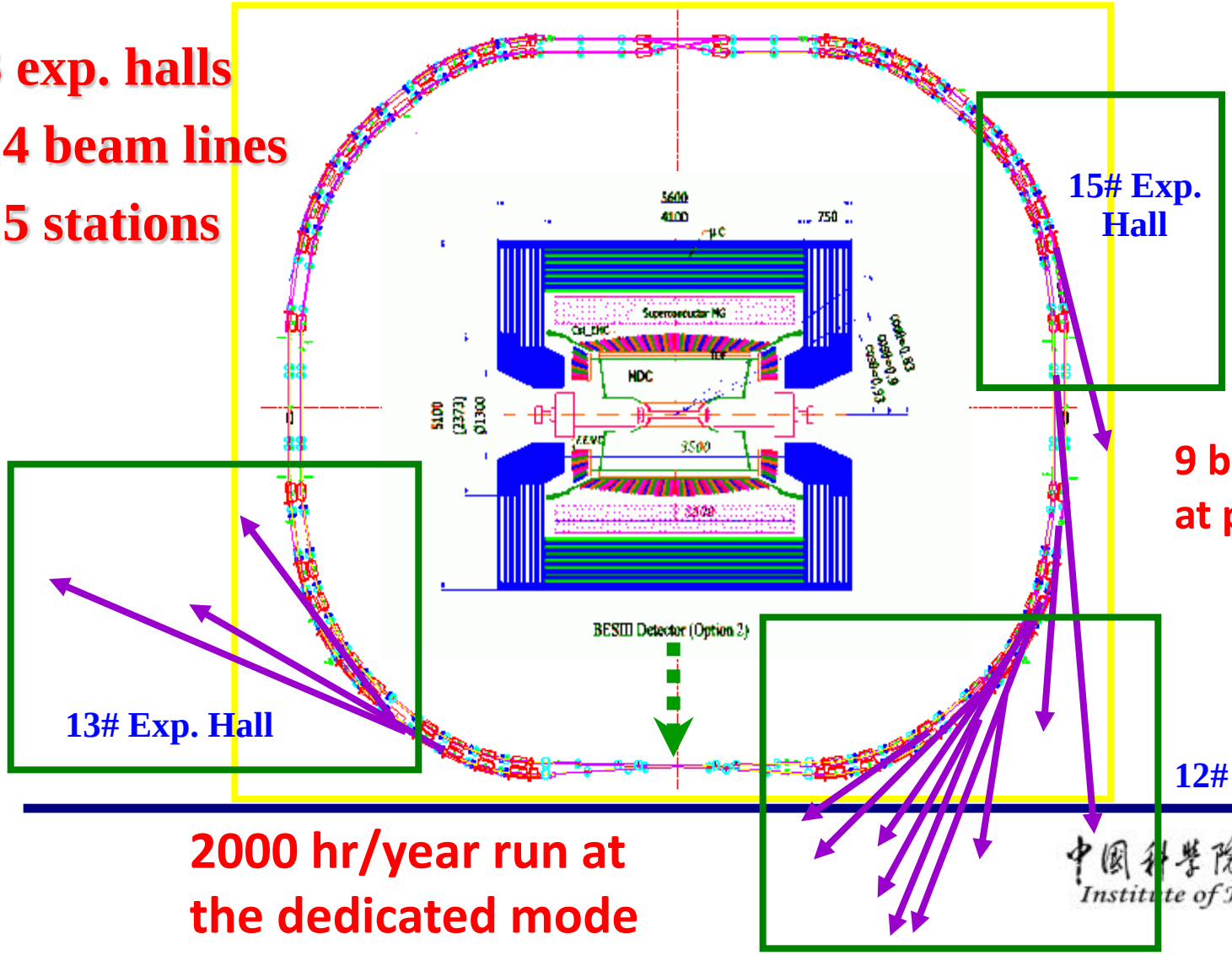

9 beam lines run at parasitic mode

2000 hr/year run at the dedicated mode

中国科学院高能物理研究所
Institute of High Energy Physics

Design Parameters of Storage Rings (Dedicated SR Mode)

Energy	GeV	2.5
Circumference	m	241.13
Beam current	A	0.25
Bunch number		100 – 200
Bunch current	mA	1.2 – 2.5
Bunch spacing	m	1.2
Bunch length	cm	1.3
RF frequency	MHz	499.80
Harmonic number		402
Emittance (x/y)	nm•rad	100/1
No. of wiggler		5
Beam lifetime	hrs	10@2.5GeV, w/ 5 wig.

Dedicated synchrotron radiation mode

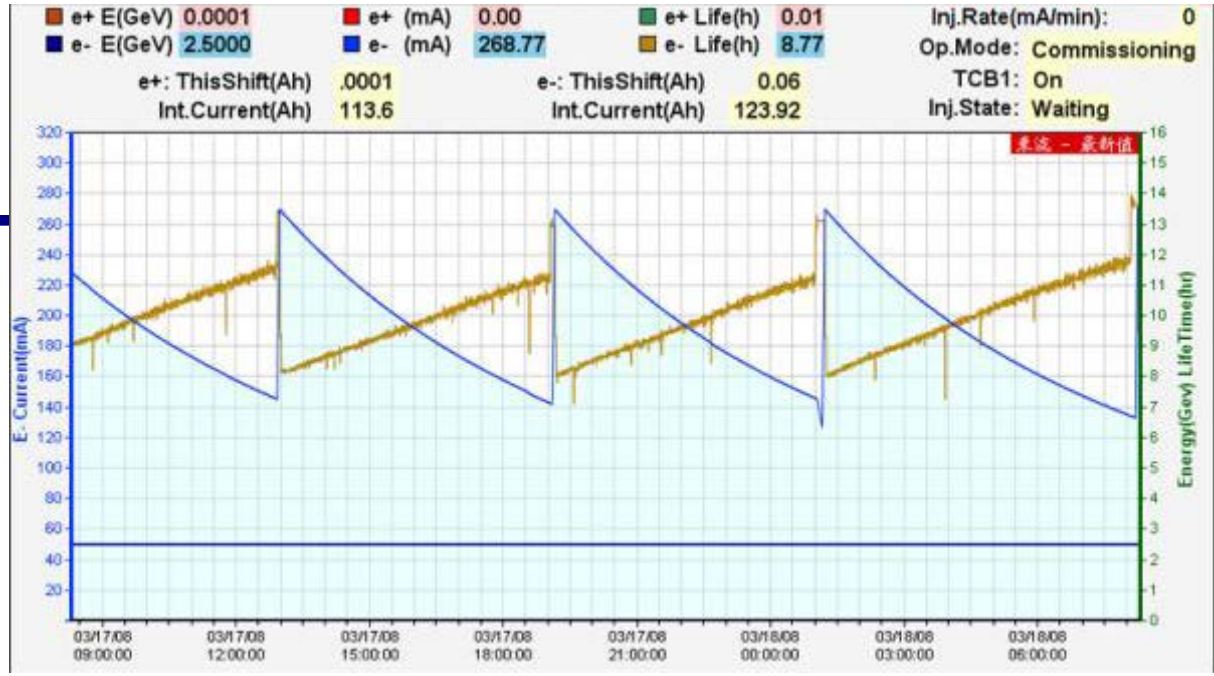

Parasitic synchrotron radiation mode/ collision mode with 2 wigglers on

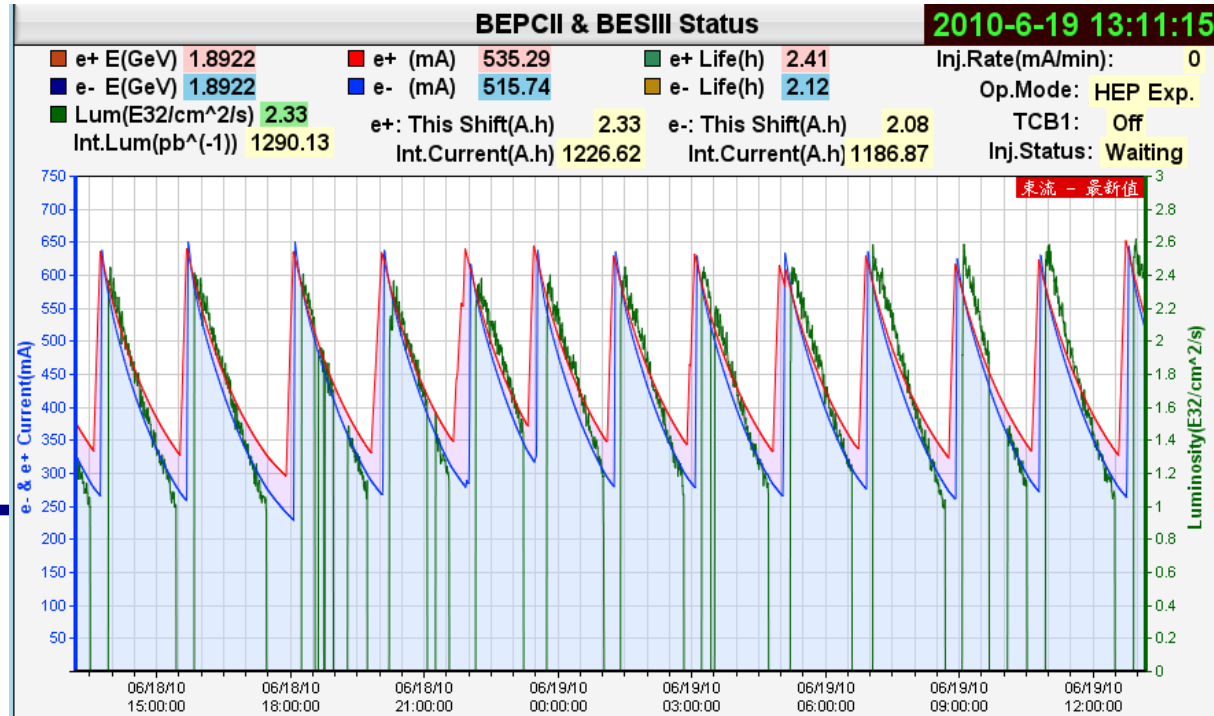

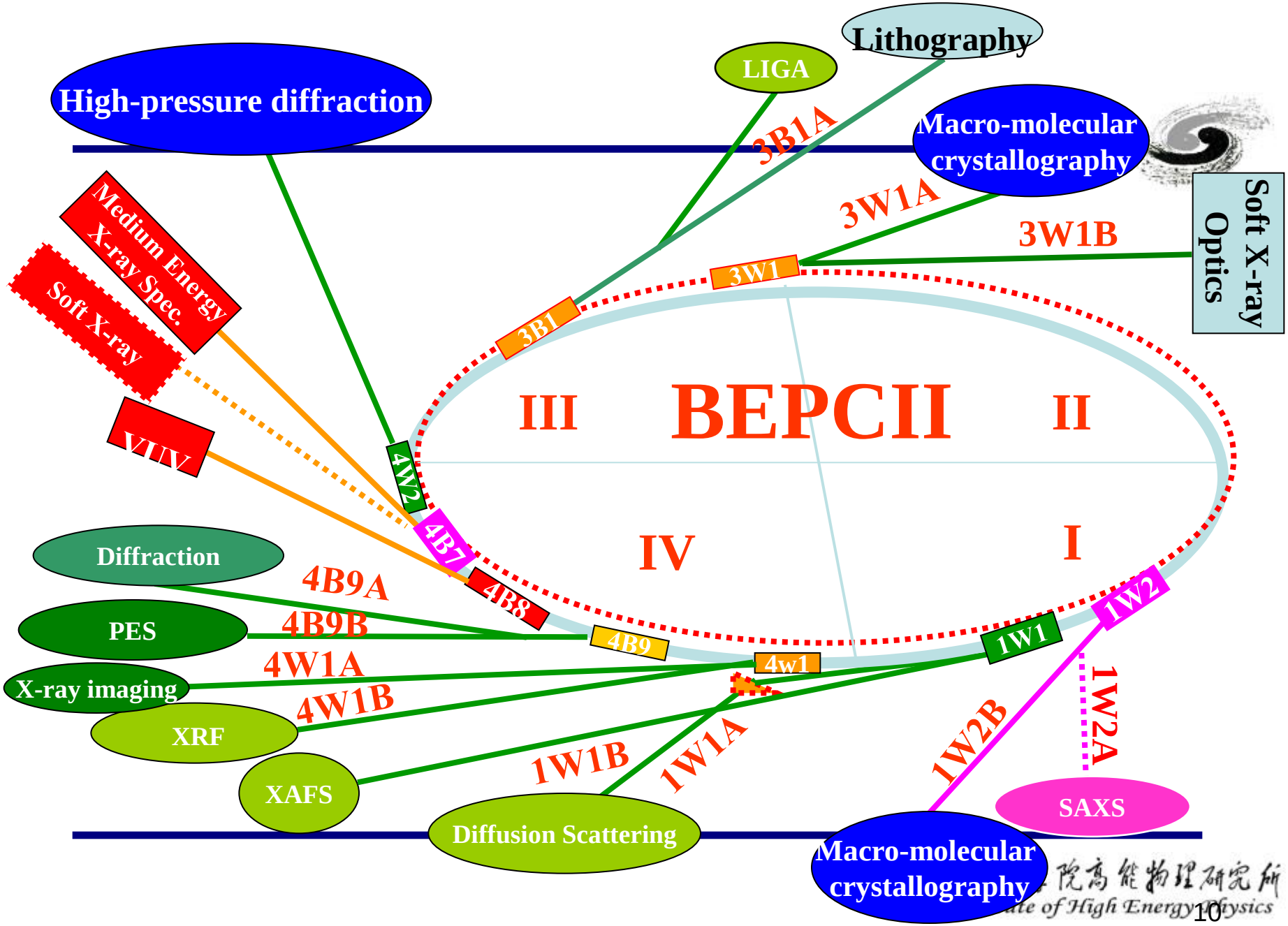
High-pressure diffraction
LIGA
Lithography
Macro-molecular crystallography
3B1A
3W1A
3W1B
Soft X-ray Optics
Medium Energy X-ray Spec.
Soft X-ray
VUV
3W1
3B1
III
BEPCII
II
IV
I
4W2
4B7
4B8
4B9
4w1
1W1
1W2
Diffraction
PES
X-ray imaging
XRF
XAFS
4B9A
4B9B
4W1A
4W1B
1W1B
1W1A
1W2B
1W2A
SAXS
Diffusion Scattering
Macro-molecular crystallography

Proposals Distribution — Users Distribution

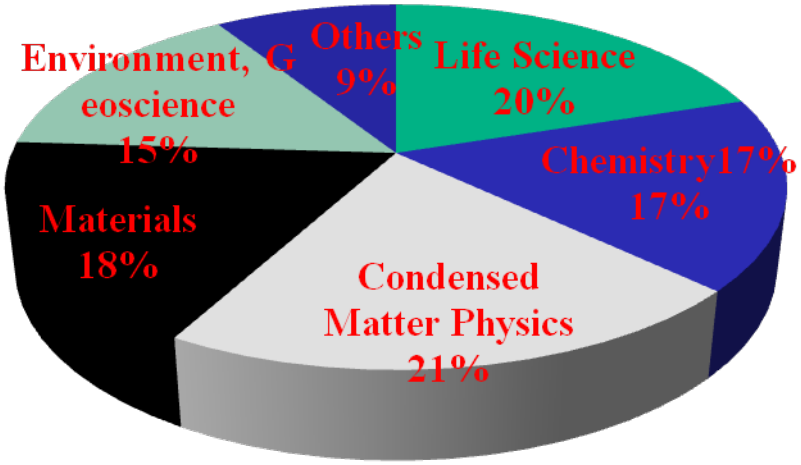

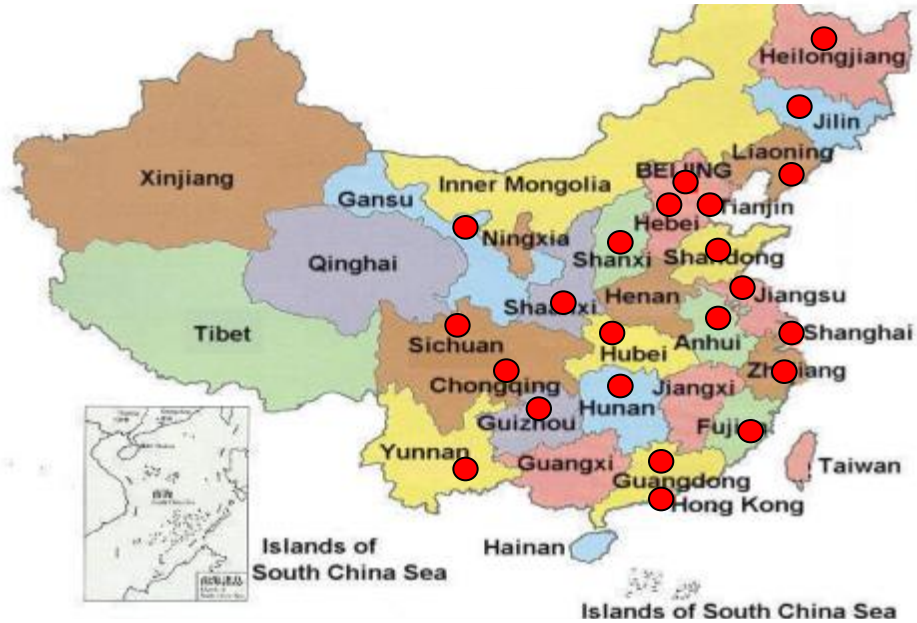

- **Beam time**
  - **For basic scientific researches**
  - **For national and social needs (health, environment, etc.)**

Average about 1000 users, and 150 publications/year

Distribution of light sources in China

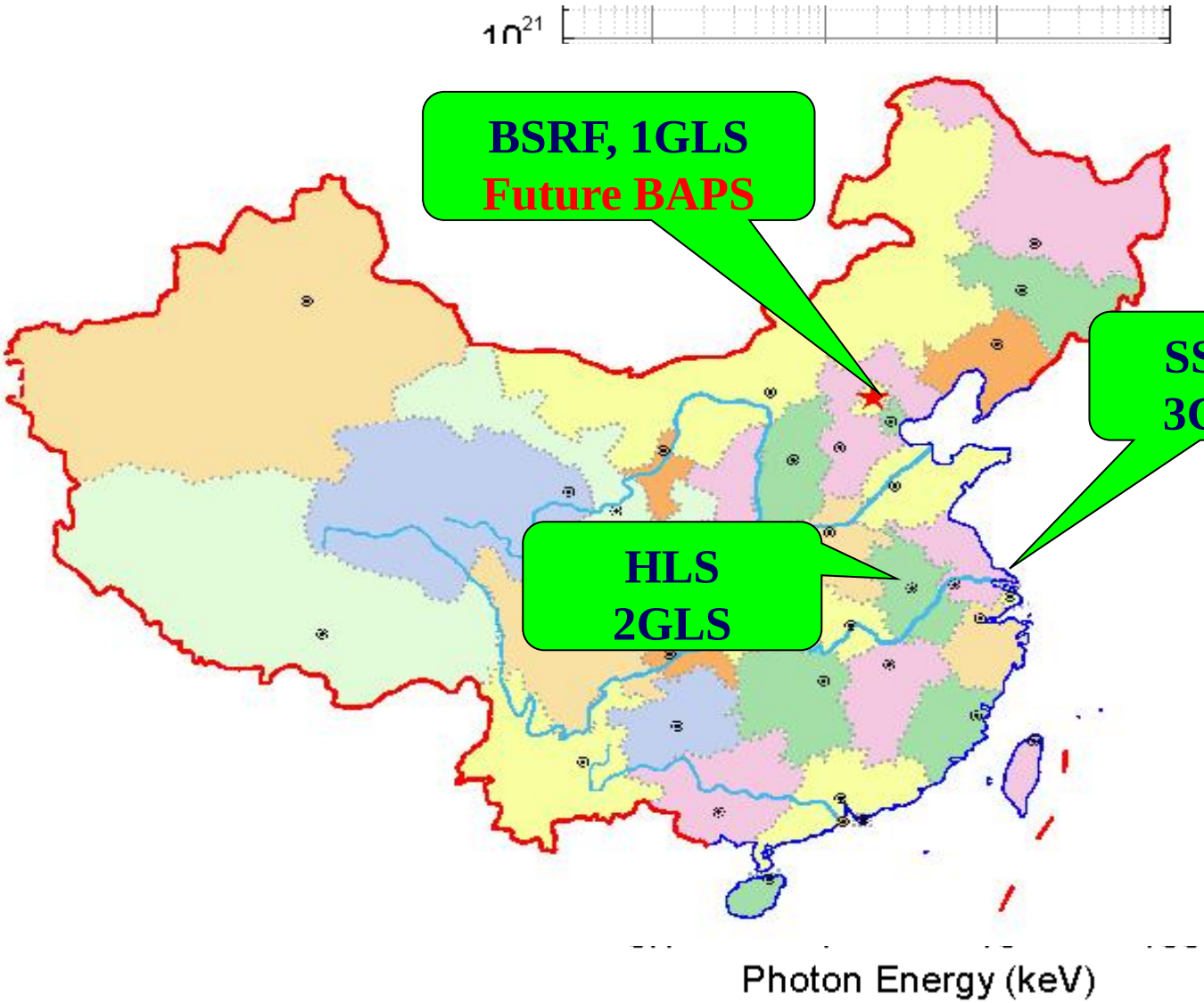

Shanghai Synchrotron Radiation Facility:
3rd generation light source,
3.5 GeV, 432 m, ~4 nm.rad

More brilliant light source at higher energy?

BAPS …

Scientific requirements for BAPS

- **Excellent performance**
  - ✓ **Brightness：10^{21}**
  - ✓ **Hard X-ray：300keV**
  - ✓ **Short pulse：7 ps**
- **More ability on the support of scientific platform**

Promotion on

- ✓ **nm level high brightness focusing spot**
- ✓ **enrgy resolution at sub-meV**
- ✓ **Time resolution at ps**
- ✓ **Capacity on penetrating power**
- ✓ **Combination on multi-purpose**

Schematic layout of Beijing Advanced Photon Source

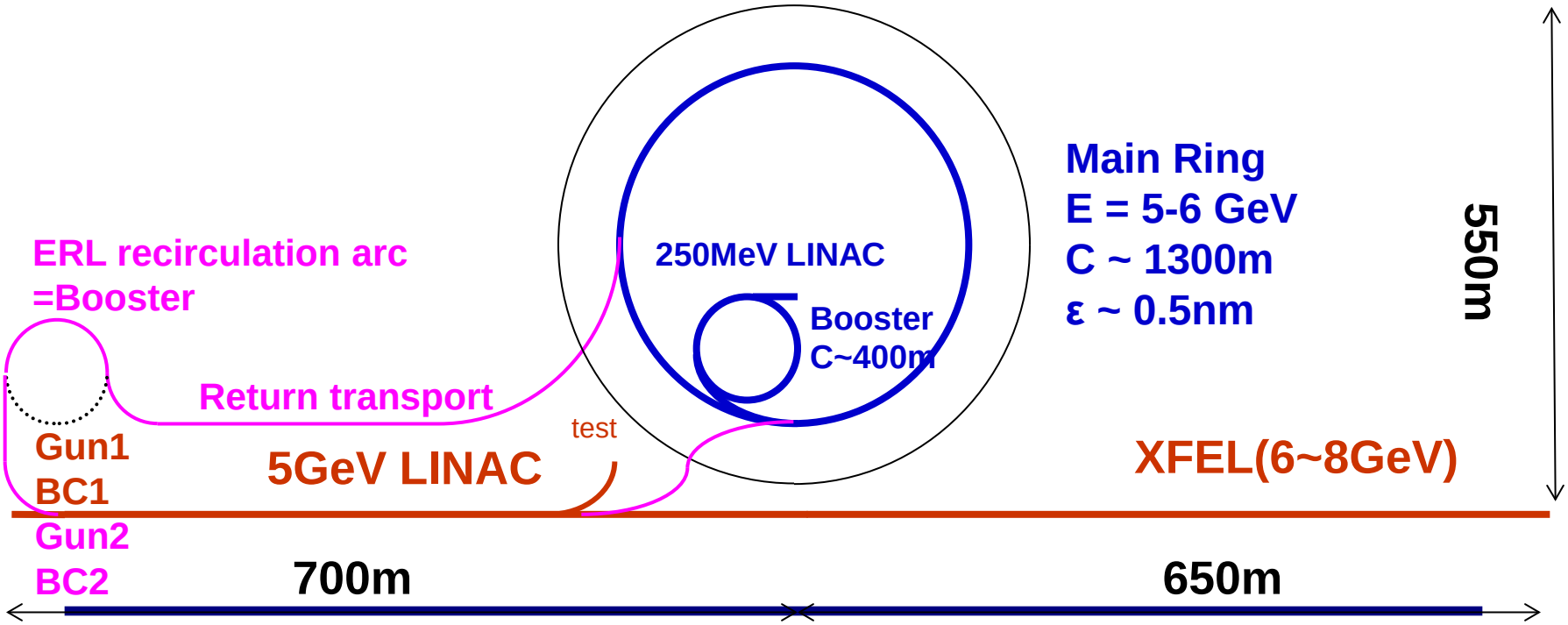

中国科学院高能物理研究所
Institute of High Energy Physics

Site

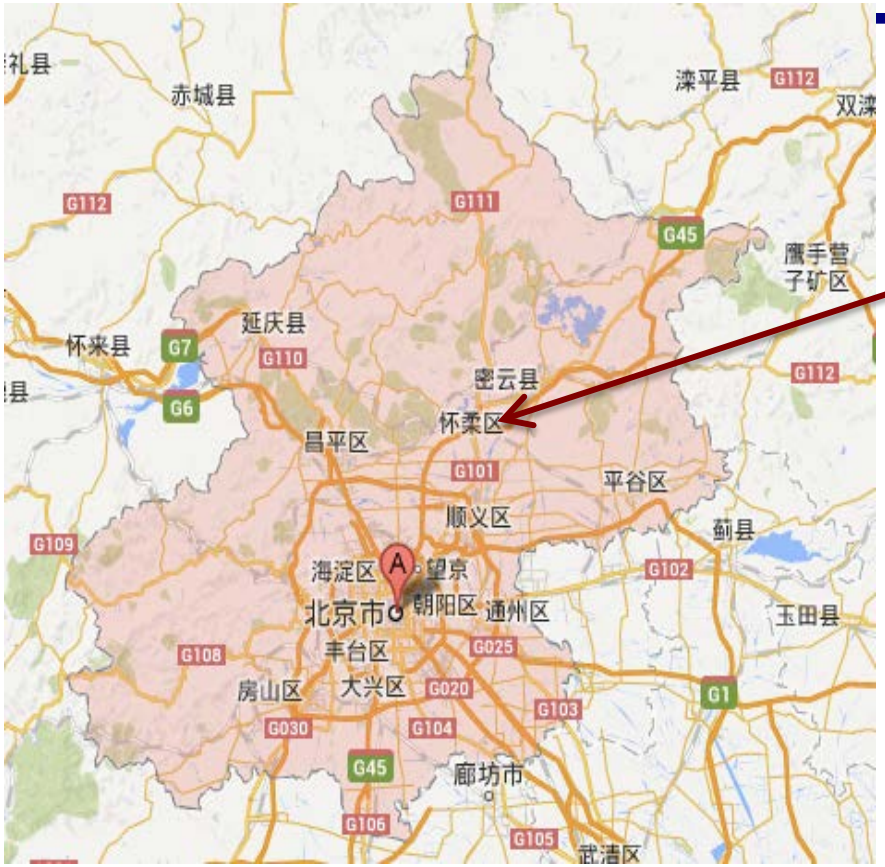
赤城县
滦平县
G112
双滦
G111
G45
鹰手营
子矿区
延庆县
怀来县
G7
G110
G6
密云县
怀柔区
昌平区
G101
平谷区
顺义区
蓟县
G109
海淀区
望京
北京市
朝阳区
通州区
G102
玉田县
G108
丰台区
G025
房山区
大兴区
G020
G1
G103
G030
G104
G45
廊坊市
G106
G105
武清区

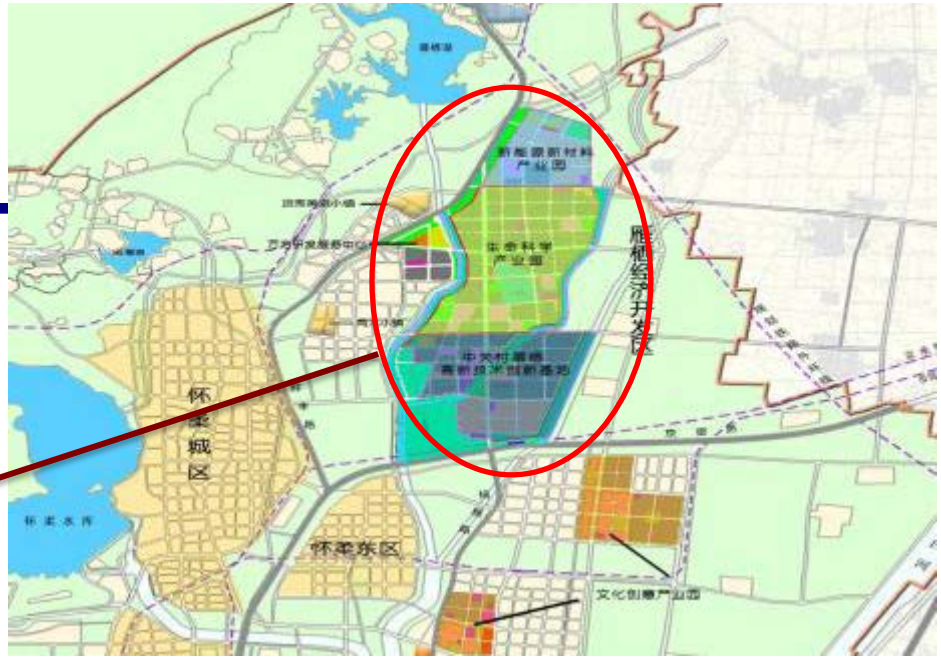
怀柔城区
怀柔水库
怀柔东区
文化创意产业园

Beijing Advanced Photon Source (BAPS)

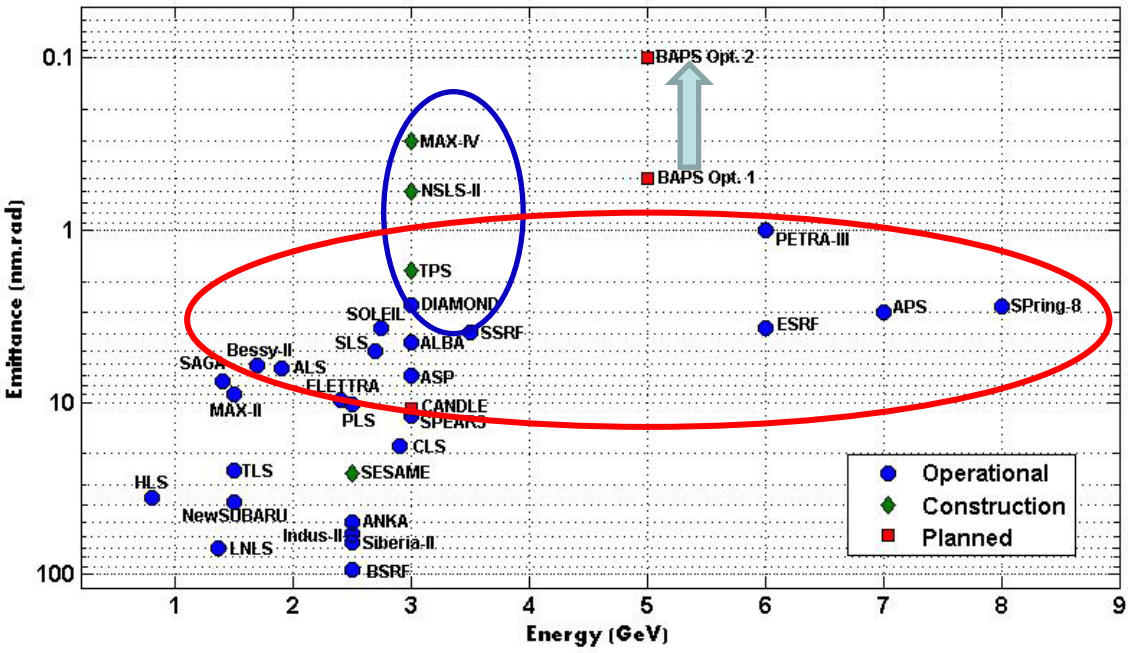

5 – 6 GeV, ~1300 m,
~ 0.46 nm.rad, 0.15 nm.rad w/DW
200 ~ 300 mA,
Brightness: > 10^{21} /s/mm^2/mrad^2/0.1%BW
Feasible upgrade to ERL or USR

1 – Linac
2 – Booster
3 – Storage ring
4 – Beam lines
5 – Experimental stations

Lattice evolution:

- **48 DBA, 1200 m, 1.5 nm.rad, 0.5 nm.rad w/DW**
- **36 7BA, 1370 m, 51 pm.rad, 10 pm.rad w/DW + round beam production**
- **40 TBA, 1280 m, 0.46 nm.rad, 0.15 nm.rad w/ID and DW**
- **7BA, ~1300 m, 0.088 – 0.048 nm.rad**

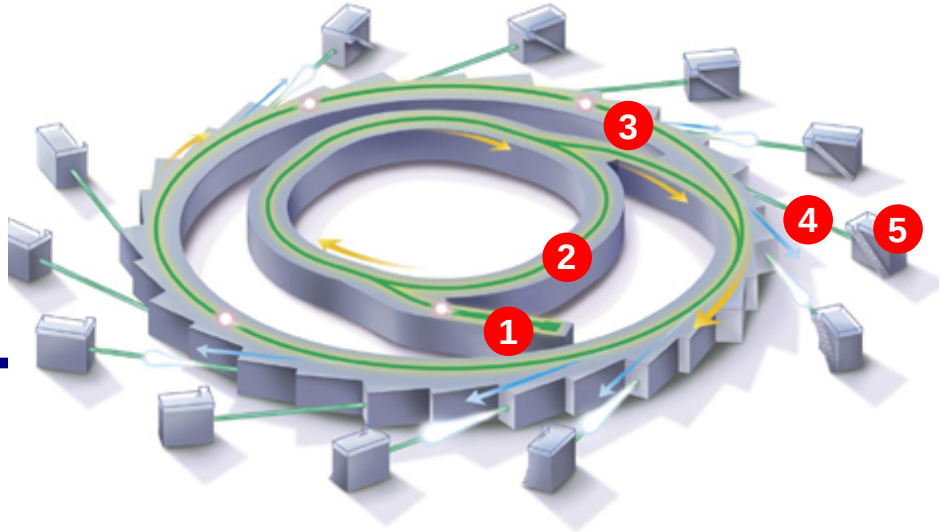

R&D project of BAPS (accelerator)

- Conceptual Design of BAPS, storage ring design
- Extreme high precision measurement (<1μm), control and feedback of beam orbit
- High precision magnets (quad), combined quad-sext magnet, and high precision power supply
- Design and manufacture of key devices (BPM, feedback, synchrotron light monitor, etc.)
- High performance insertion devices (SC wiggler, low-temp. undulator)
- Mechanics (girder, survey, etc.)
- RF system with solid state power supply and cavity
- Mock up of the girder, tunnel, etc.

R&D project of BAPS (beam line)

- Extremely high performance monochromators
- High precision X-Ray mirror mechanism and metrology
- X-Ray nano-focusing optics and nano-probe positioning and scanning technology
- Inelastic X-ray scatting spectrometer
- Femtosecond time resolution X-ray pump-probe technology
- High performance X-ray detector
- In-suit measurement under extreme condition
- Integration and simulation of engineering materials

Progress on BAPS R&D project

- In 2010, BAPS R&D project was proposed to the National Development and Reform Committee for the next 5-year Plan. It was approved by Scientific Review Committee. Waiting to be approved by National Council.
- On 18 March, 2011, CAS and Beijing government signed an agreement to establish jointly the Beijing Multi-disciplinary Research Center (later BASIC), in Huairou.
- In Sept. 2011, a Xiangshan Science Conference has been held on the demands in China for high energy Synchrotron source. Users expressed strong interests in BAPS。
- The geographic survey and vibration measurements had been carried out preliminary in 2012 and 2013.
- Formal proposal on BAPS R&D project submitted March 2014.

2. Accelerator Physics Design

- Lattice evolution (5 GeV)

	48–DBA	32–7BA	40–TBA
Circumference (m)	1208	1262	1284
Bare lattice emit. (pm)	1440	75	460
Emit. w/D.W. or Sol. (pm)	500/5 (H/V)	10/10 (H/V)	150/150 (H/V)
Beam current (mA)	200 – 300	200	200 – 300
Straight section (N * L)	44*6.4 + 4*14.6	16*12 + 16*8	20*9.6 + 20*6.6
Critical energy (keV)	13.4	7.56	10.66/5.33
Energy loss per turn (MeV)	2.67 (dipole)	1.51 (dipole)	1.6 (dipole)
Brightness (Phs/s/mm^2/mrad^2/0.1%BW)	～$1*10^{21}$	～$2*10^{22}$	～$3*10^{21}$

Two scenarios of 7BA lattice (6 GeV)

- **MAX IV – type**

Beam current I_0	200	mA
Bunch number n_B	2000	
Circumference	**1294.2**	**m**
Horizontal damping partition number $J_x/J_y/J_z$	2.05/1./0.95	
Natural emittance	**88 (61)**	**pm**
Working point (x/y/z)	93.14/49.40/0.0058	
Natural chromaticity (x/y)	-112/-107	
Number of 7BA achromats	**44**	
Number of high-beta **10-m** injection sections	2	
Beta functions in high-beta injection section (x/y)	90/30	m
Number of low-beta **5-m** ID sections	42	
Beta functions in low-beta straight section (x/y)	10/3	m
Damping time (x/y/z)	11.2/23.0/24.3	ms
Energy loss per turn, U_0	2.25	MeV
Energy spread σ_δ	0.001	
Momentum compaction	5.9×10^{-5}	
RF voltage, V_{rf}	**10**	**MV**
RF frequency, f_{rf}	500.36	MHz
Harmonic number	2160	
Natural bunch length σ_z	2.2	mm

Linear lattice design

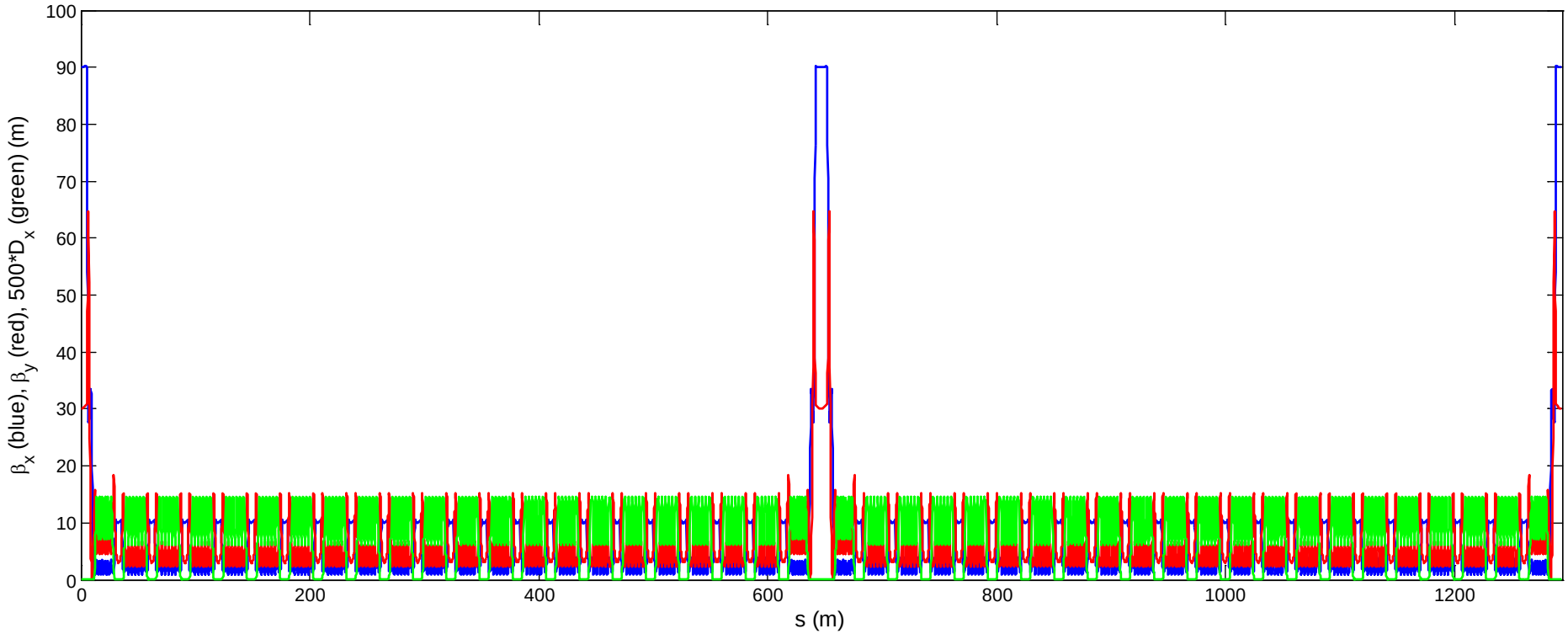

- 40 standard 7BAs + 4 non-standard 7BAs (for injection)
- Similar to PEP-X design (Cai, et al., PRST-AB 2012, 054002), each standard 7BA, phase advance is about ($4\pi+\pi/4$, $2\pi+\pi/4$), thus every 8 such 7BAs form a quasi-3rd order achromat (to cancel the nonlinearities as much as possible).
- For each non-standard 7BA, high-beta, 10-m long straight section is designed for injection, the phase advance is matched to (4π, 2π) to restore the symmetry of the beam optics.

Standard 7BA

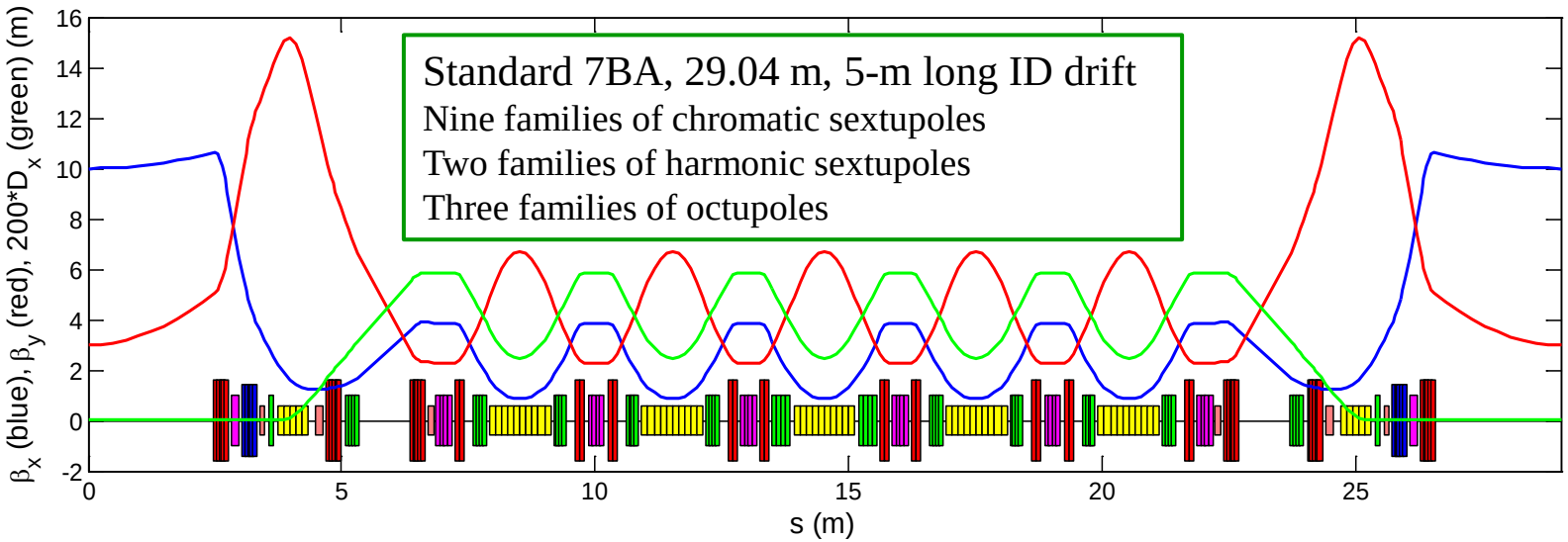

- **Unit cell, compact design, horizontal defocusing gradient combined in dipole, total length = 3 m.**
- **Magnet aperture (radius = 12.5 mm), vacuum chamber inner radius = 11 mm.**
- **Reserved space for correctors (between SD and QF).**
- **QF gradient: < 80 T/m, QD gradient in dipole: < 20 T/m, sext. gradient: < 11400 T/m^2, oct. gradient: < 10^6 T/m^3**

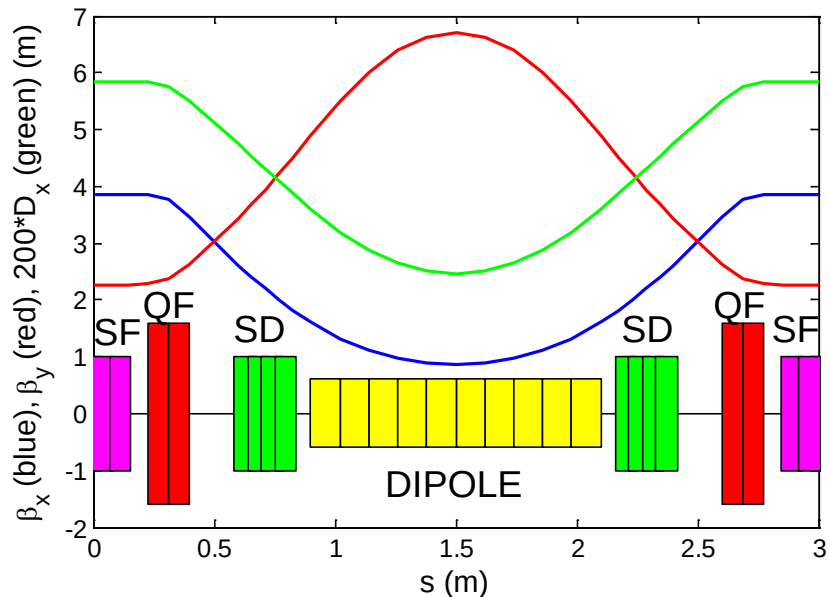

Non-standard 7BAs

Two non-standard 7BAs, 10-m long drift for injection, phase advances are 8π & 4π

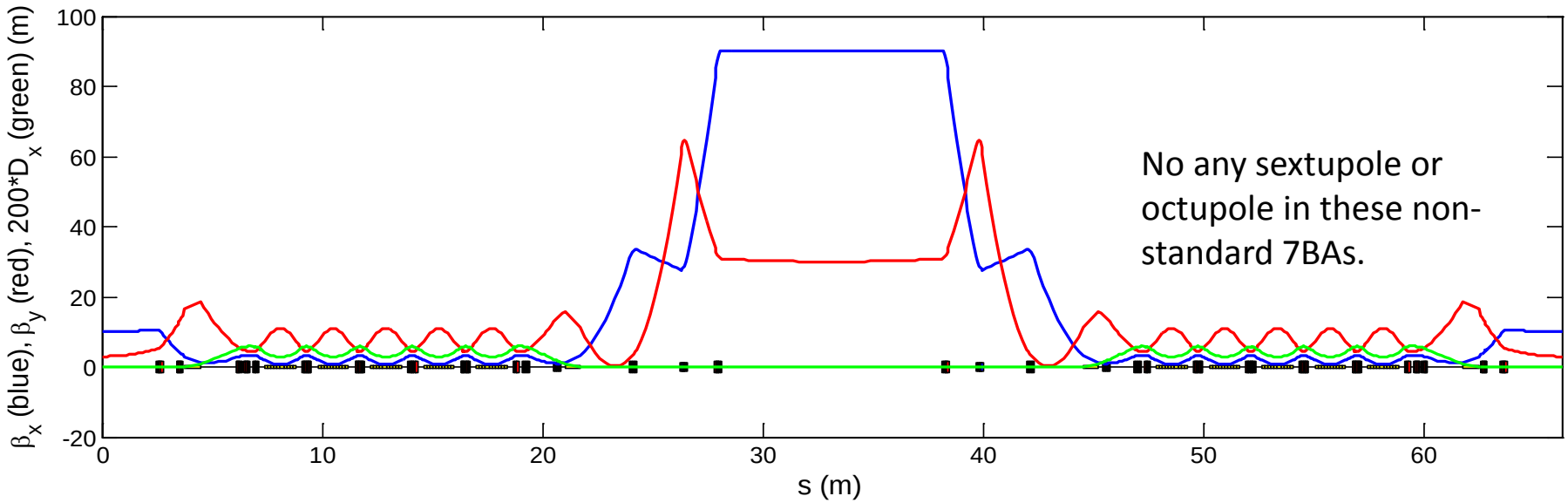

- **High beta functions result in relatively large dynamic aperture, promising both off-axis and on-axis injection.**
- **However, the phase advance will deviates from 2*nπ* for off-momentum particles, leading to difficulty in optimizing the momentum acceptance.**

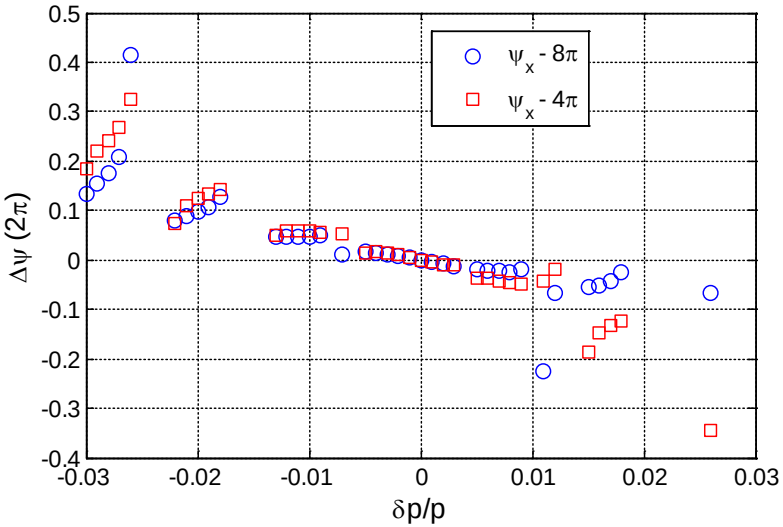

Nonlinear optimization

- Strong nonlinearities caused by the chromatic sextupoles make it hard to obtain a large dynamic aperture and a large momentum acceptance at the same time.
- The deviation of the phase advance of the injection section from $2n\pi$ adds the difficulty of the optimization.
- Three modes (only different in sextupole and octupole strengths) are explored, and are used to inject and store the beam, respectively.
  - Mode 1, horizontal dynamic aperture (DA) > ±11 mm, momentum acceptance (MA) ~1%
  - Mode 2, horizontal dynamic aperture (DA) ~±10 mm, momentum acceptance (MA) ~1.8%
  - Mode 3, horizontal dynamic aperture (DA) ~±5 mm, momentum acceptance (MA) ~3%

- **Mode 1**

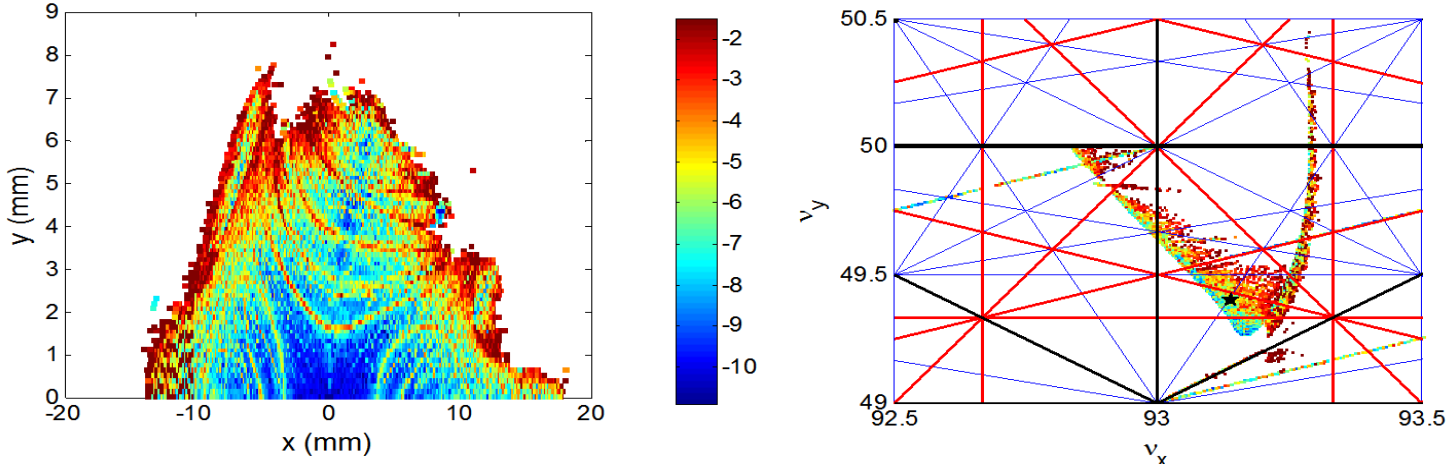

- **Mode 2**

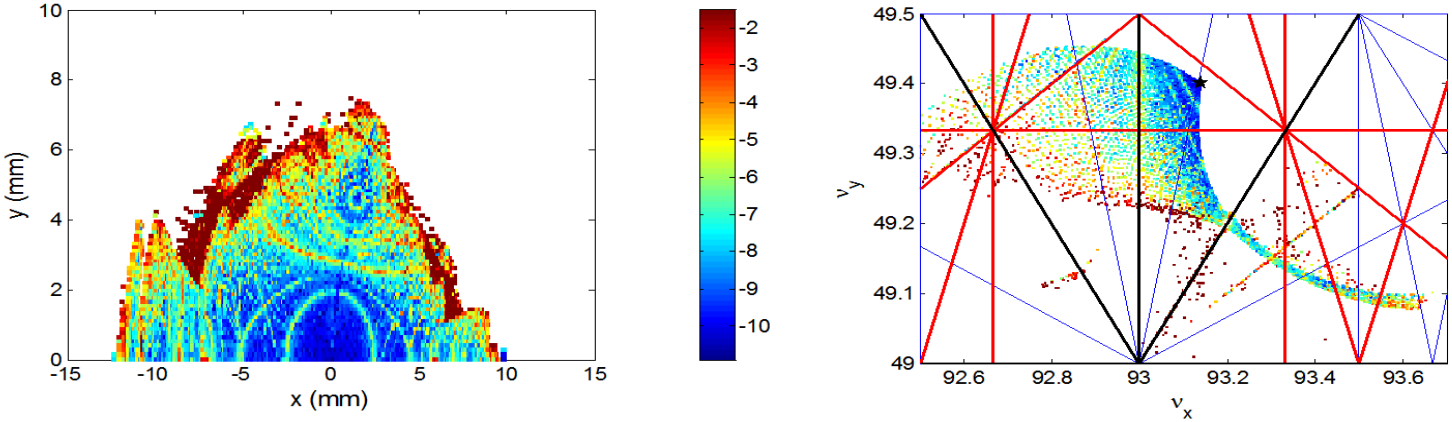

- **Mode 3**

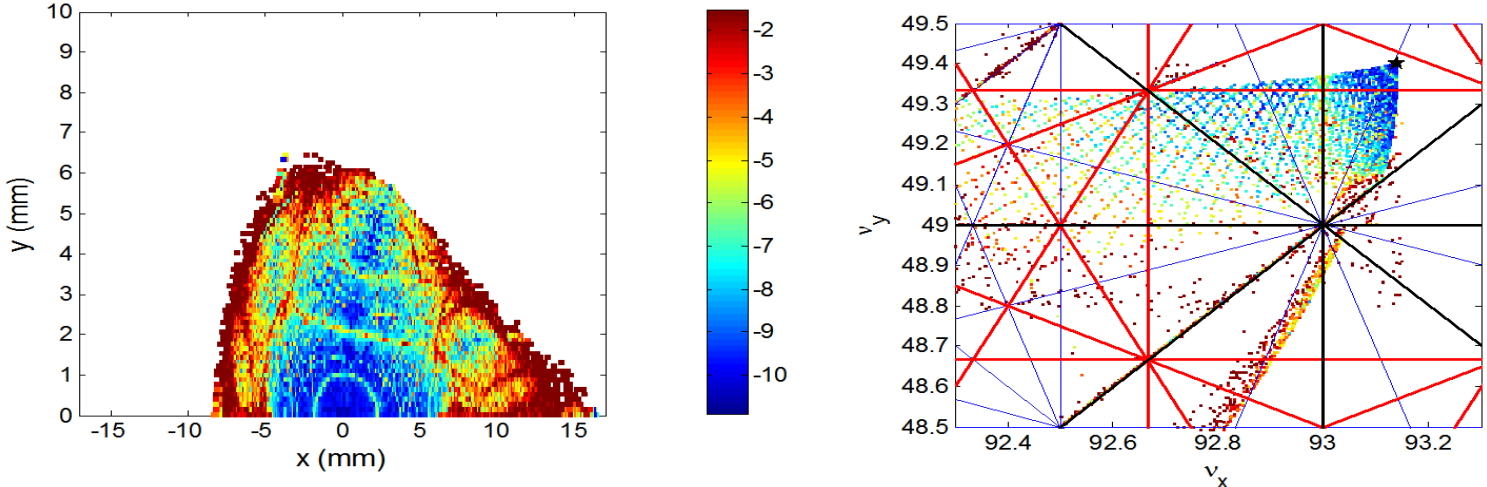

- **ESRF-type**

Beam energy E_0	6	GeV
Beam current I_0	200	mA
Circumference	**1296.14**	**m**
Horizontal damping partition number $J_x/J_y/J_z$	2.05/1./0.95	
Natural emittance	**48.3**	**pm**
Working point (x/y/z)	113.14/41.18/0.003	
Natural chromaticity (x/y)	-143.6/-167.4	
Number of 7BA achromats	**48**	
Number of low-beta **6-m** ID sections	48	
Beta functions in low-beta straight section (x/y)	7.9/2.8	m
Damping times (x/y/z)	15.9/26.6.0/21.7	ms
Energy loss per turn, U_0	1.95	MeV
Energy spread σ_δ	0.00091	
Momentum compaction	3.8×10^{-5}	
RF voltage, V_{rf}	**4.5**	**MV**
RF frequency, f_{rf}	499.6	MHz
Harmonic number	2160	
Natural bunch length σ_z	2.4	mm

High Energy Photon Source(HEPS) "ATOM" Version: 0.00/00 Mon 15 Sep 2014 18:50:36

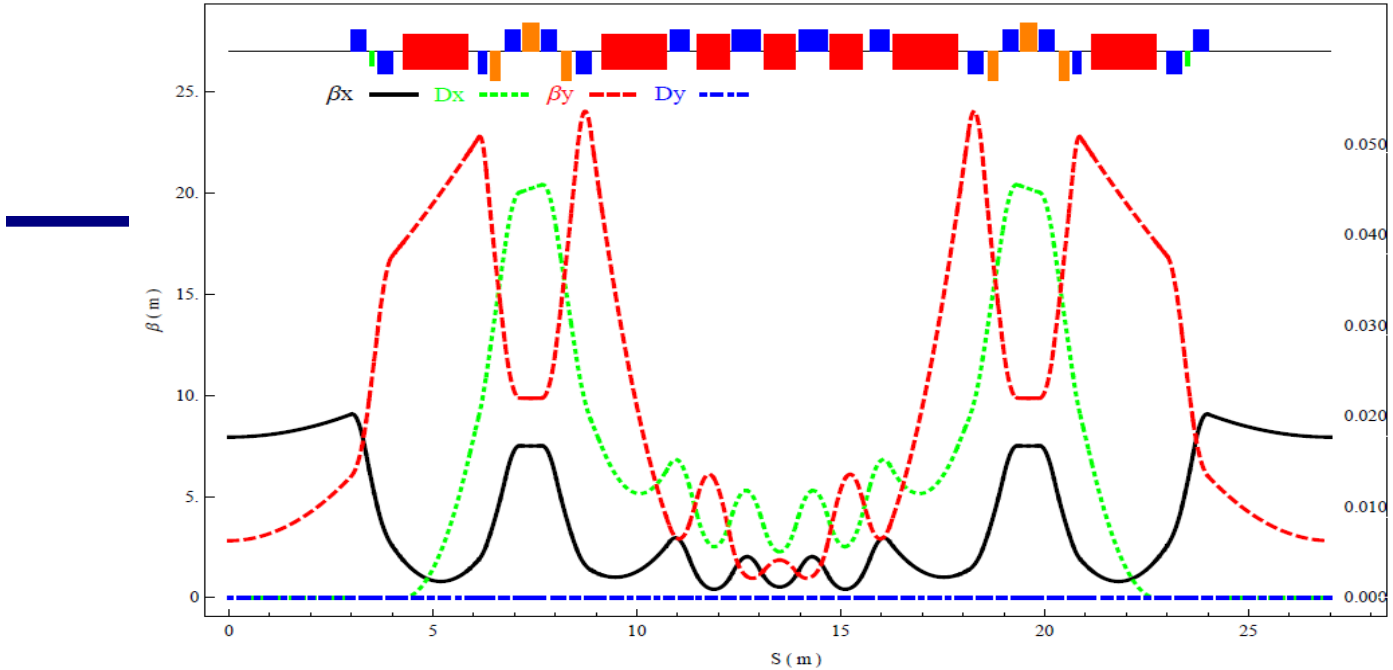

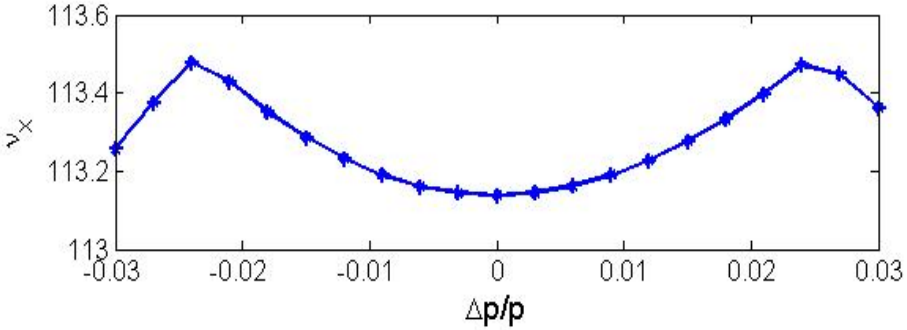

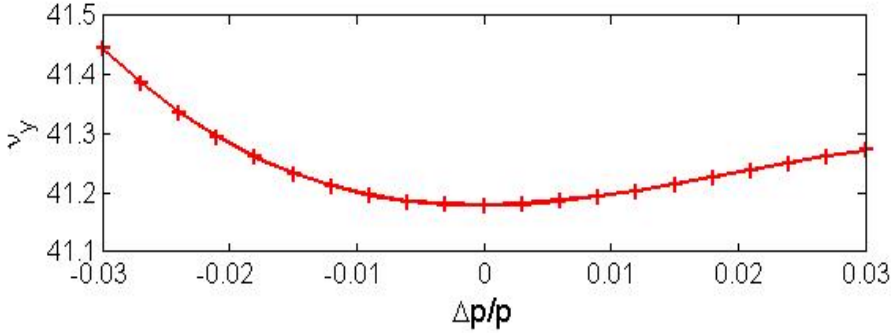

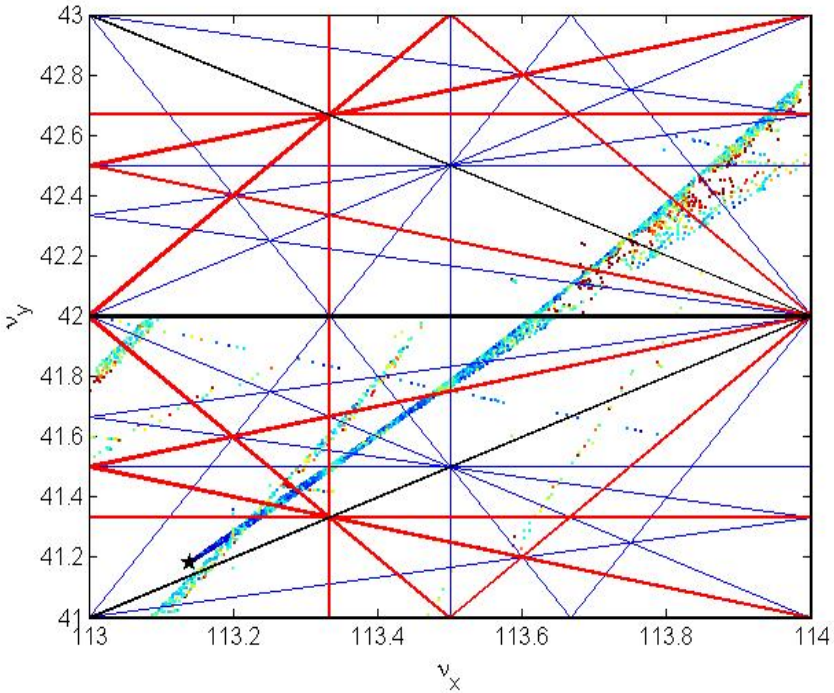

Dynamic Aperture (1000turns)

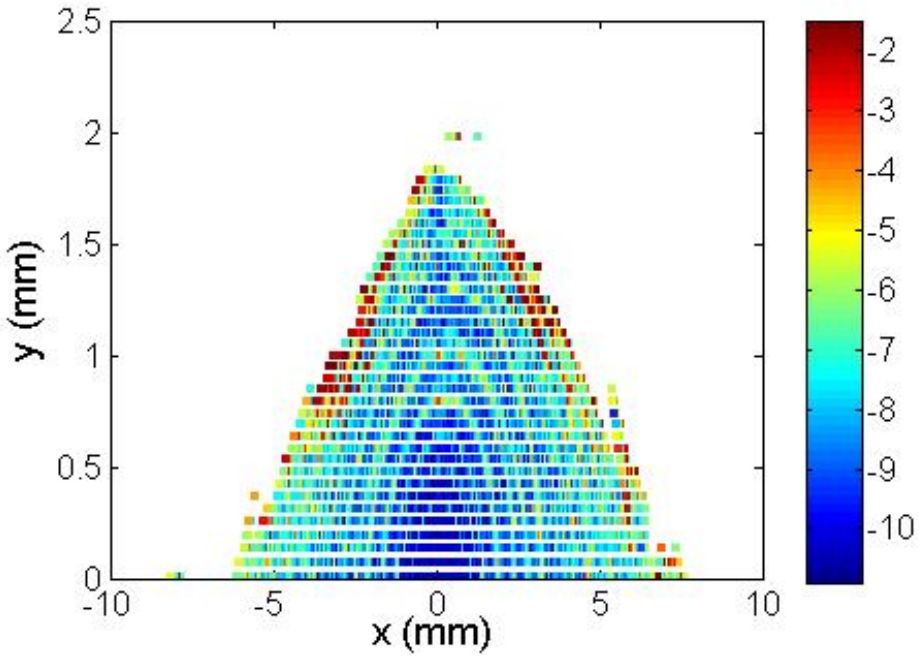

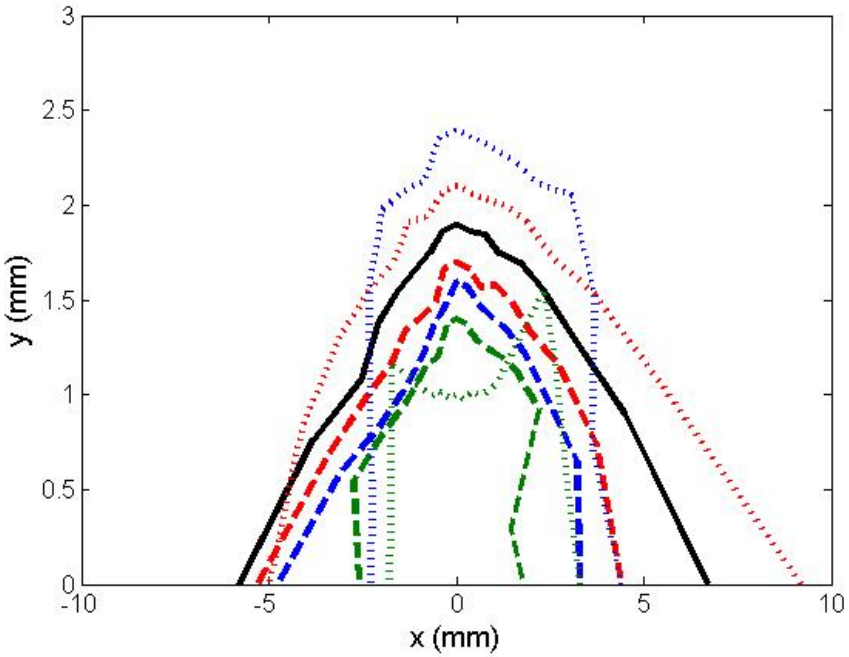

Black:	0		
Reddot:	-1%	Reddash:	1%
Bluedot:	-2%	Bluedash:	2%
Greendot:	-3%	Greendash:	3%

SWAPOUT INJECTION

1. Inject linac beam @250MeV
2. Ramp to 5/6GeV
3. Kick out the bunches, and inject to booster
4. Wait 3 damping time of booster
5. Inject booster beam to main ring

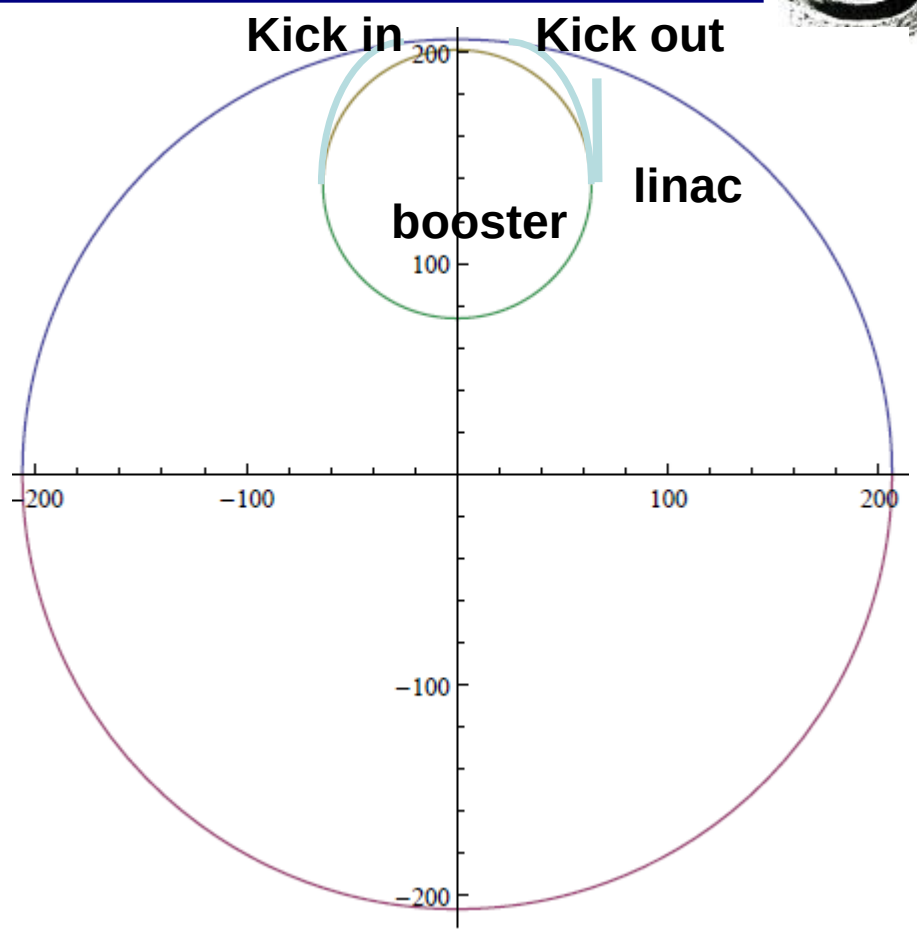

3. Technical systems for R&D

- Magnet (high gradient quad, combined function magnets)
- Power supplies
- Injection system
- Beam instrumentation
- Mechanics and alignment
- Insertion device
- RF system
- Test environment

• Magnet

- **High gradient quad and high gradient dipole/quad combined function magnet**
  - **2D design finished**
  - **Pure iron is used as the yoke and pole material.**
  - **FeCo or FeCoV alloy will be considered to reduce the power consumption.**

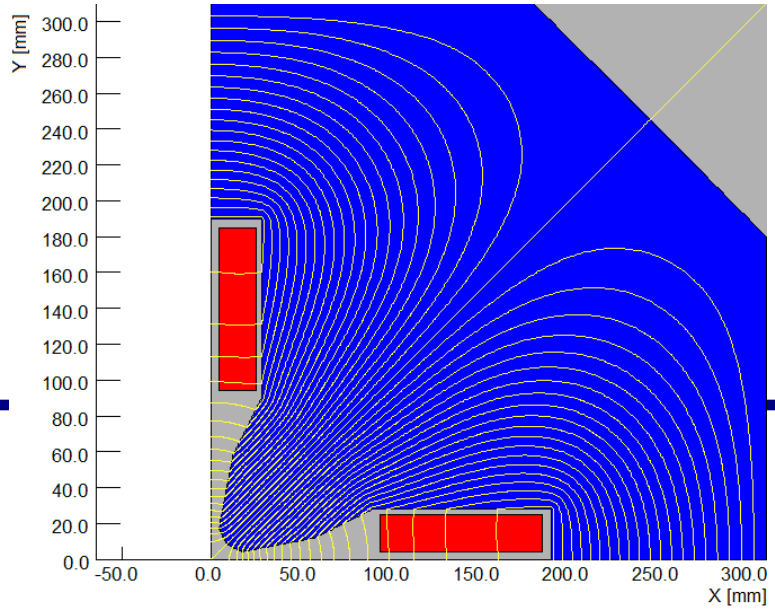

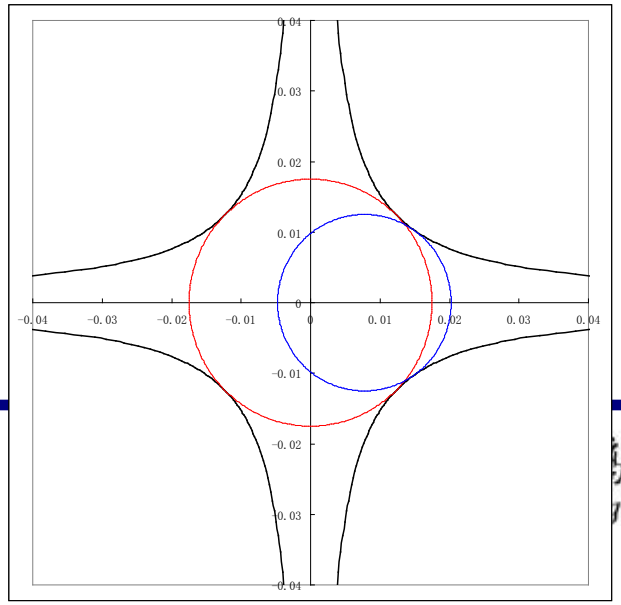

高能物理研究所
gh Energy Physics

- **Design parameters of the high gradient magnets**

	High gradient quadrupole	High gradient dipole/quadrupole combined function magnet
Magnetic length [mm]	690	760
Aperture [mm]	25	35
Dipole [T]	—	0.488
Quadrupole [T/m]	100	62.9
Good field region [mm]	±5	±5
High order field [B_n/B_2]	1×10^{-4}	1×10^{-4}
Material	Pure iron	
Ampere turns [AT]	8963	8982
Power consumption [kW]	13.2	14.7

• Power supply

• 10ppm ultra-high stable power supply

- Stability requirements: an order of magnitude higher than BEPCII power supplies.
- For fully-digital power supply, application of highly precious and stable ADC is most important.
- Research on the water-cooling, air-cooling and power room temperature control to ensure 10ppm stability.

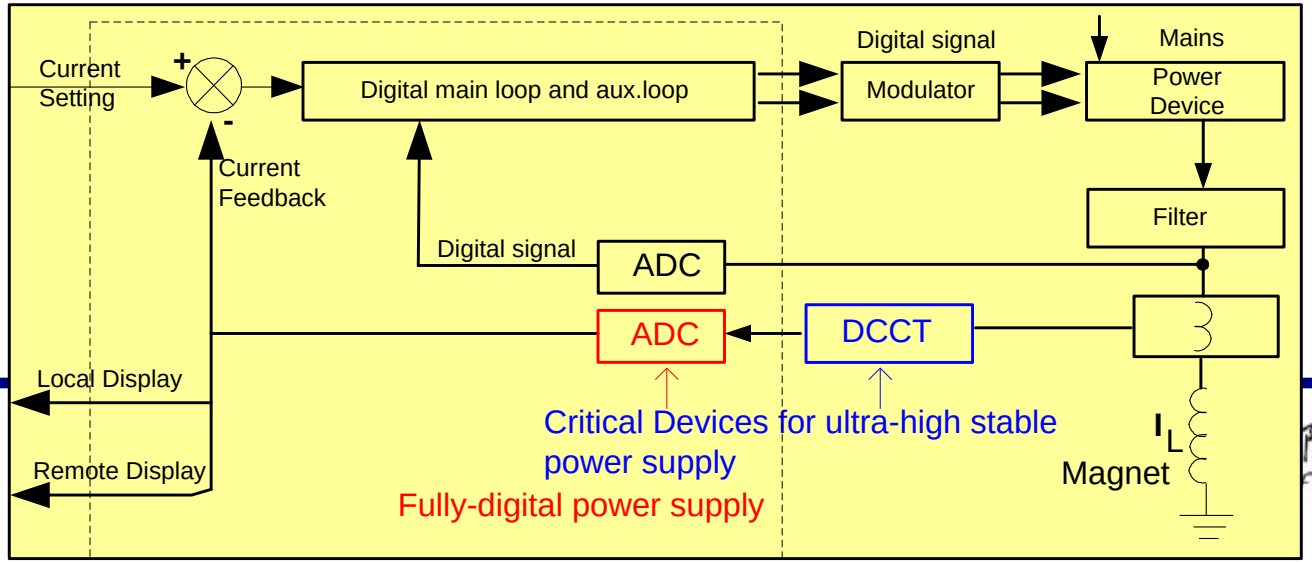

院高能物理研究所
High Energy Physics

2Hz dynamic output power supply

- **Tracking error control: 0.1% current tracking error**
  - Special design for digital control strategy
    - ***repetitive controller: not only the present but also the former error will act on the plant. The error is active repeatedly, after a few cycles, the tracking error will be greatly improved.***
  - Special considerations on mains topology for stabilization and EMI

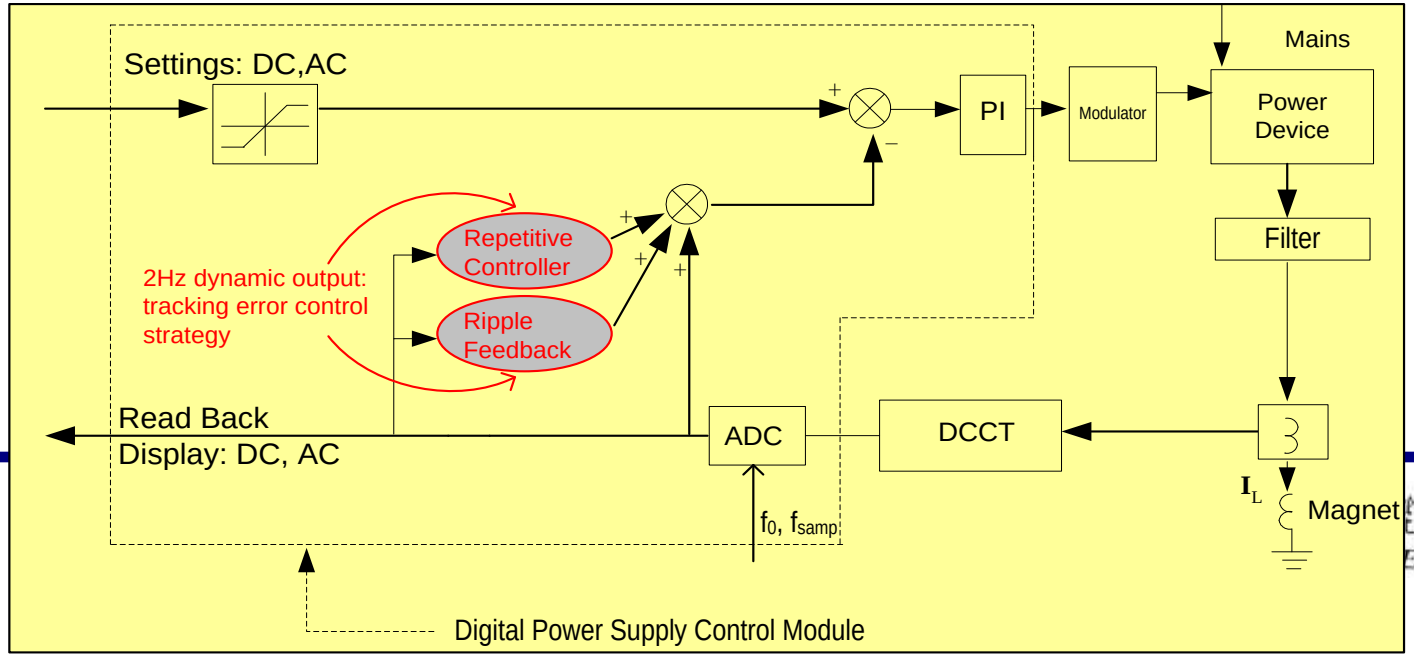

Energy Physics

2Hz dynamic output power supply

- **A prototype: 180A/30V**
  - With the self-designed digital controller
  - Adding the repetitive controller:
    - 100 + 50 sin(wt)
    - output shows: tracking error better than 0.5 ‰

Fast power supply for corretor

- **Fast correction magnet power supply**
  - Remote interface has become a part of digital power supply control module.
  - The current setting should be updated greater than 100KHz.
  - Fast link interface (fiber link, 50Mbps) will be developed for BAPS digital power supply.

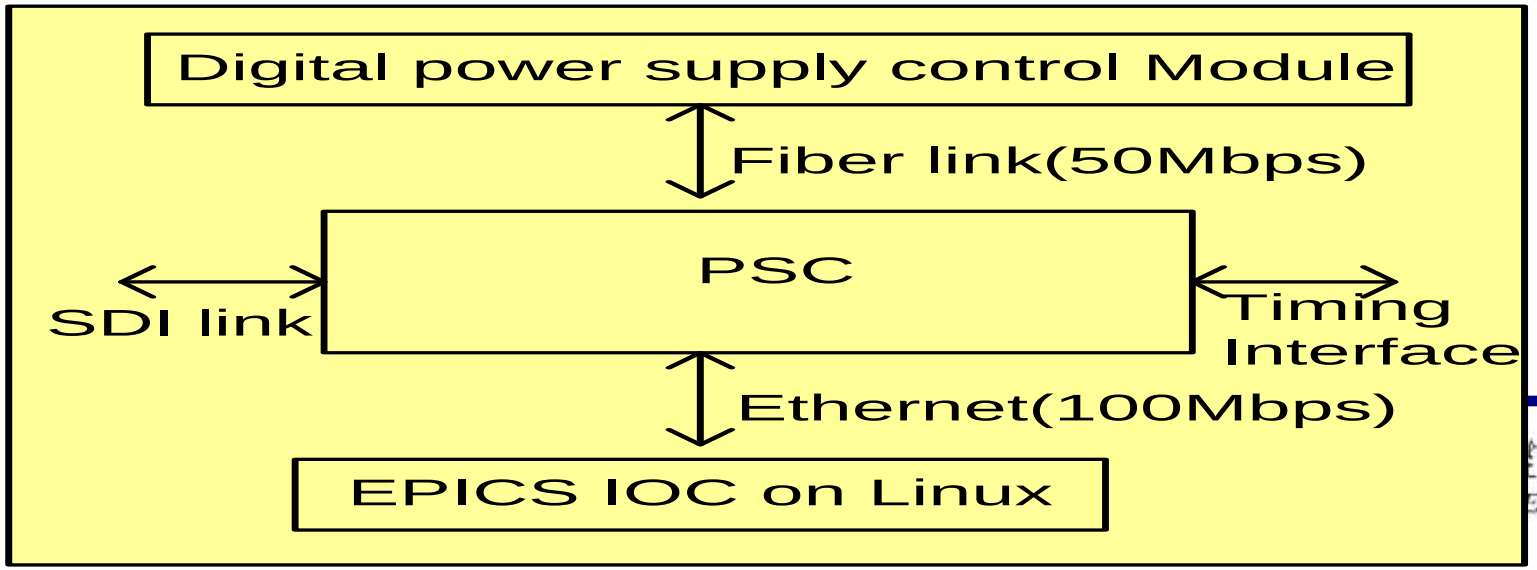

Compact Digital Power Supplies

- **Compact and cost effective design**
  - **For ultra low power correction power converters:**
    - **digital controller occupying a lot of space**
    - **the costs are too high**
  - **use a compact design as the following shows:**
    - **compact and modular design**
    - **one controller for 3 sets power converters**
    - **AC/DC converters providing dc-link power should be common for several PS**

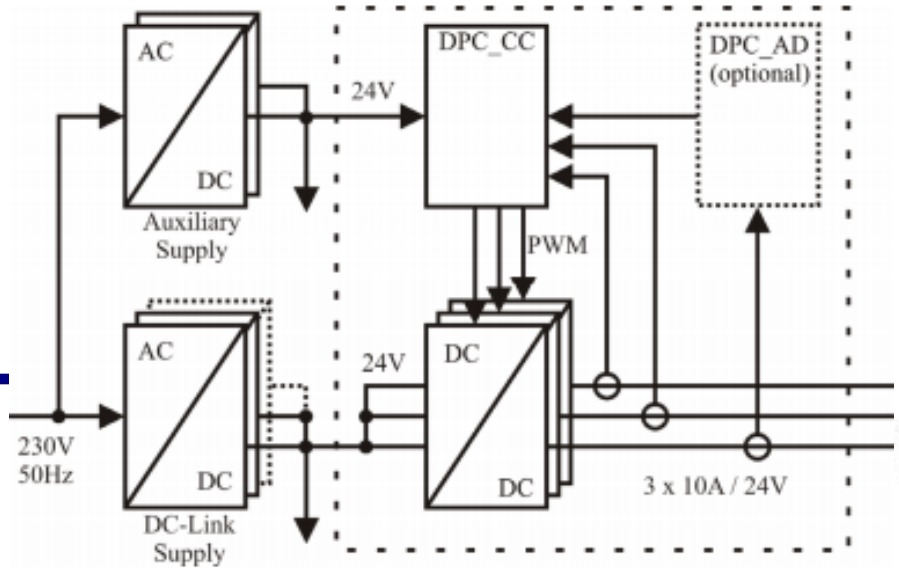

Injection

- **Top-up Injection Schemes**

Potential top-up injection schemes for low emittance ring:

- **Off-axial injection (need larger DA)**
  - **Pulsed bump injection**
  - **Pulsed multi-pole injection**
- **On-axial injection (need faster kicker)**
  - **Swap-out injection (transverse, Tw<2τ)**
  - **Accumulate injection (longitudinal, Tw<τ)**

(Tw-Pulse width of kicker, τ- time spacing between bunches)

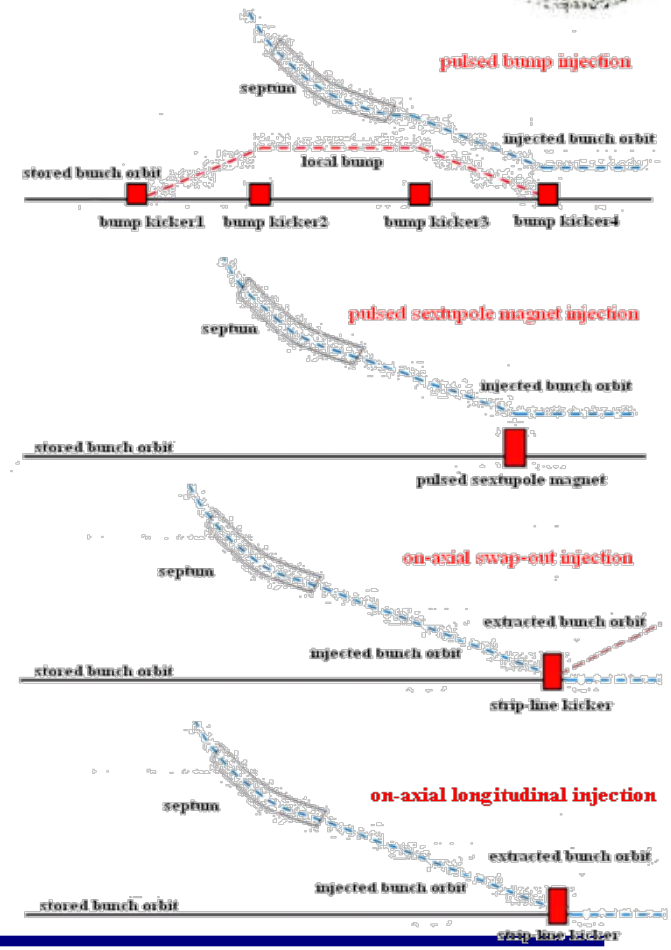

BAPS Top-up Injection System

On-axial swap-out injection system:

- Injection/ejection direction: Horizontal
- Bunch is swapped-out within a single 10.5m long straight section.
- Fast kickers： strip-line kicker； Septa： Lambertson magnet

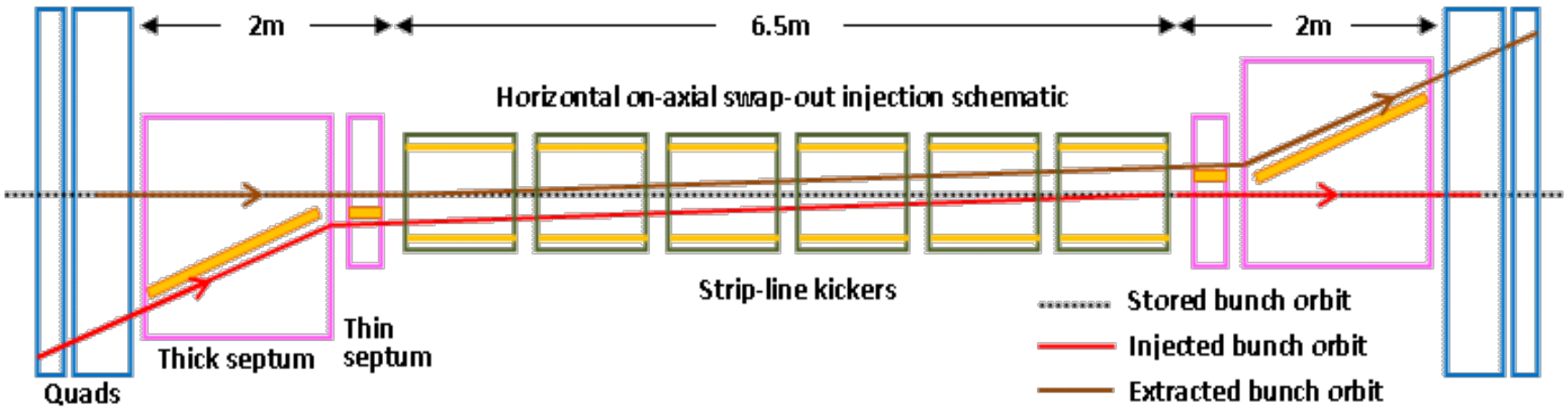

Horizontal On-axial Swap-out Injection Scheme

Requirements on Injection System

Distance between injected bunch and stored bunch orbit=5mm and distance between the septa on the both ends of straight section= 6.5m

- **kick angle: θ > 0.8mrad -> θ ≥ 3mrad**
- **Distance between electrodes > 8~10mm, provide aperture clearance to injected beam**
- **Both end of kickers are allowed horizontal position offset 1 ~2mm**

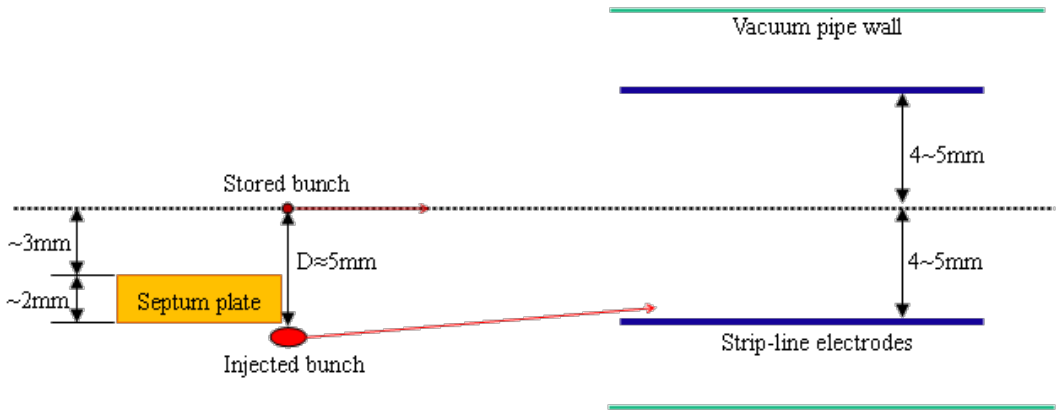

Strength Requirement for Strip-line Kicker

- **Injection beam Energy: *E*=5GeV, kick Angle *θ*=3mrad, distance between electrodes : *d*=10mm, Geometrical factor of electrode: *g*=1**

  =>*U*l* > 75kV·m

- **Six strip-line kickers: 6×*l*=6×0.75m => *U* > ±8.4kV (Bipolar pulser)**

$$F_{E+B} = 2\frac{Uq}{d} \qquad \theta = \theta_E + \theta_B = 2\theta_E = 2g\frac{eU}{E}\frac{l}{d}$$

$$g = \tanh(\frac{\pi w}{2d}) \qquad \tanh(x) = \frac{e^{2x}-1}{e^{2x}+1}$$

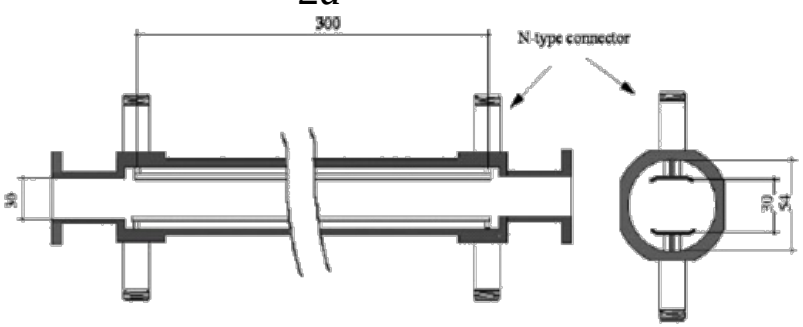

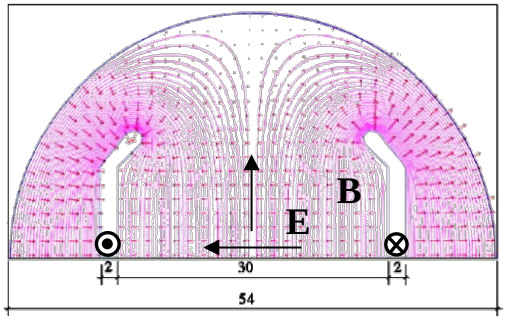

Typical Strip-line Kicker and EM Filed Distribution

Design Parameter of kicker system

Need further detailed design consideration

Parameters	Unit	HEPS	APS-U
Injected/ejected beam energy	GeV	5~6	6
Minimum spacing of stored bunches	ns	10	11.36
Length of straight section for injection/ejection	m	10.5	5.8×2
Integrate kick angle	mrad	3	2.88
Injection /ejection direction	-	Horizontal	Vertical
Effective length of strip-line kicker	m	0.75	0.72
Distance of strip-line electrodes	mm	10	9
Strip-line kicker quantity	-	6	4
Pulsed voltage of bipolar pulser	kV	±8.4	±15
Rise time of pulser（10%-90%）	ns	4	4.5
Flat-top of pulser	ns	5	5.9
Fall time of pulser（90%-10%）	ns	4	4.5

Fast Pulsed Power Supply R&D

Potential solutions is to be considered:

- RF-MOSFET based pulse power superposition technology
  - Inductive Adder
  - Transmission Line Transformer Adder
  - Marx Generator
  - Hybrid Adder
- DSRD(Drift Step Recovery Diode) based PFL(Pulse Form Line) modulator

Inductive Adder R&D experience

The prototype was special designed for ILC DR strip-line kicker in IHEP, 2011.

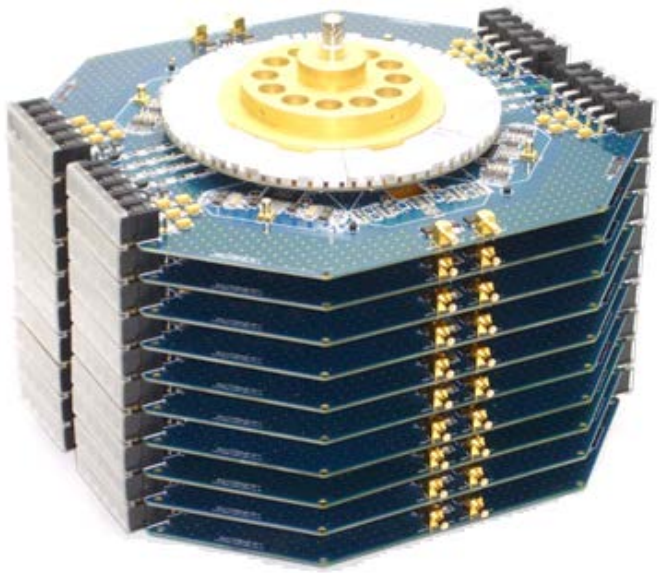

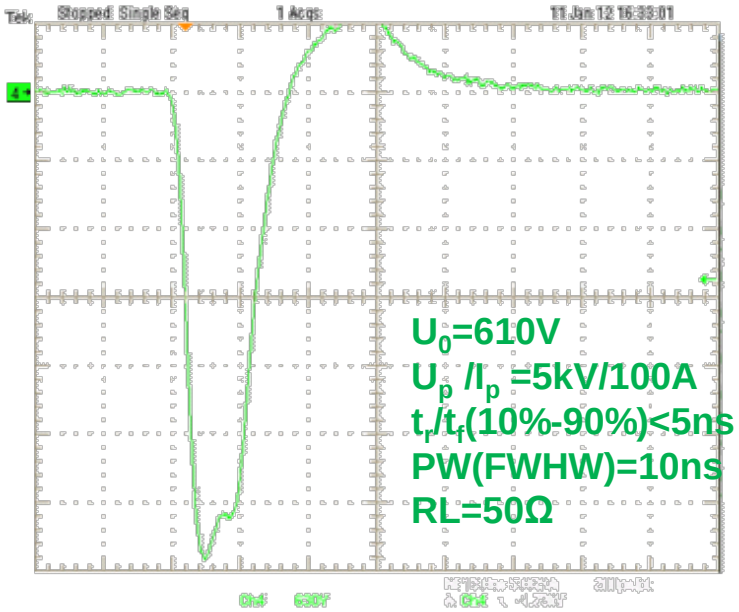

10-stage inductive adder assembly and test result

Inductive Adder for HEPS strip-line kicker

HEPS fast kicker pulser (V_p=±10~15kV into 50Ω，T_r/T_f<5ns，T_{top}=5ns ）needs:

- **25~30 stage adder**
- **6 piece of DE375-102N12A (or IXZ4DF12N100) in parallel per stage**
- **150~180 piece of MOSFET and driver in total**

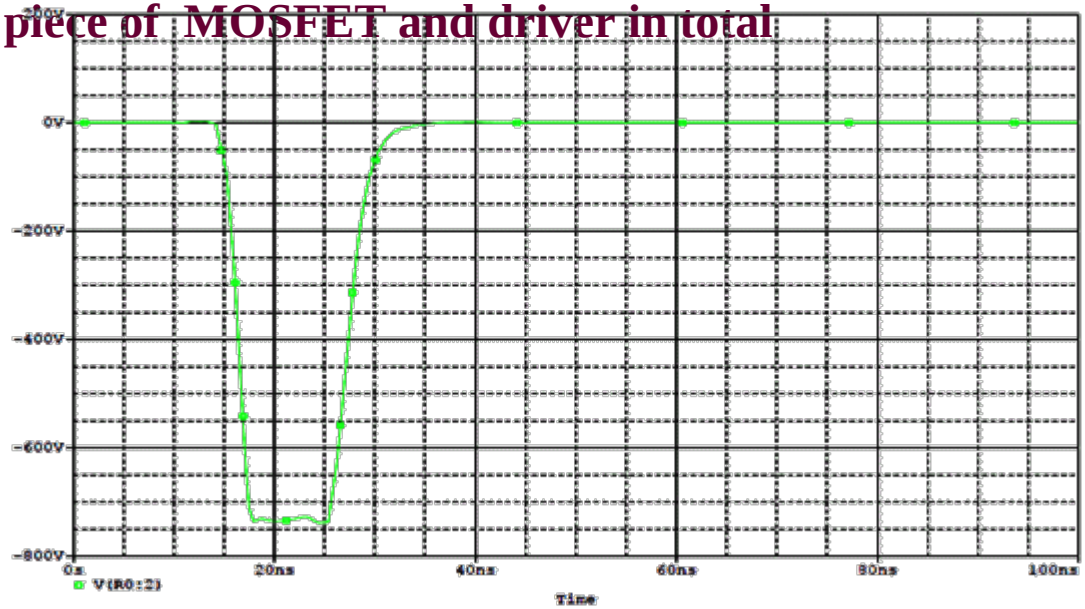

25-stage inductive adder with 6 DE375 in parallel each stage (simulated by Pspice)

中国科学院高能物理研究所
Institute of High Energy Physics

Beam instrumentation

- **Digital Beam Position Monitor electronics**
  - **RFFE (Radio frequency front end electronics)**
  - **Fast ADCs**
  - **High performance FPGA**

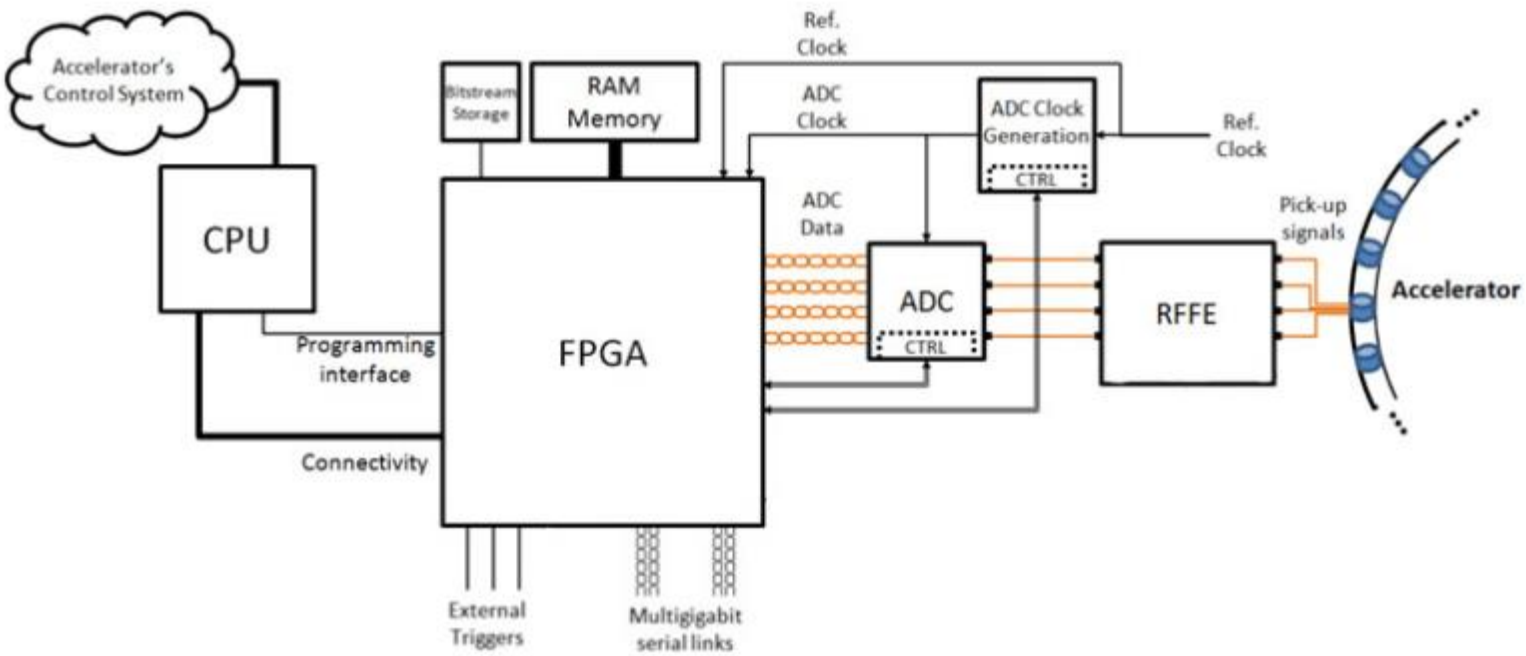

- Have developed software on the commercial data acquiring system in the lab.
- DAQ system in the lab have 4 tunnels, sampling frequency is 500MHz, and the resolution of ADC is 14 bit.

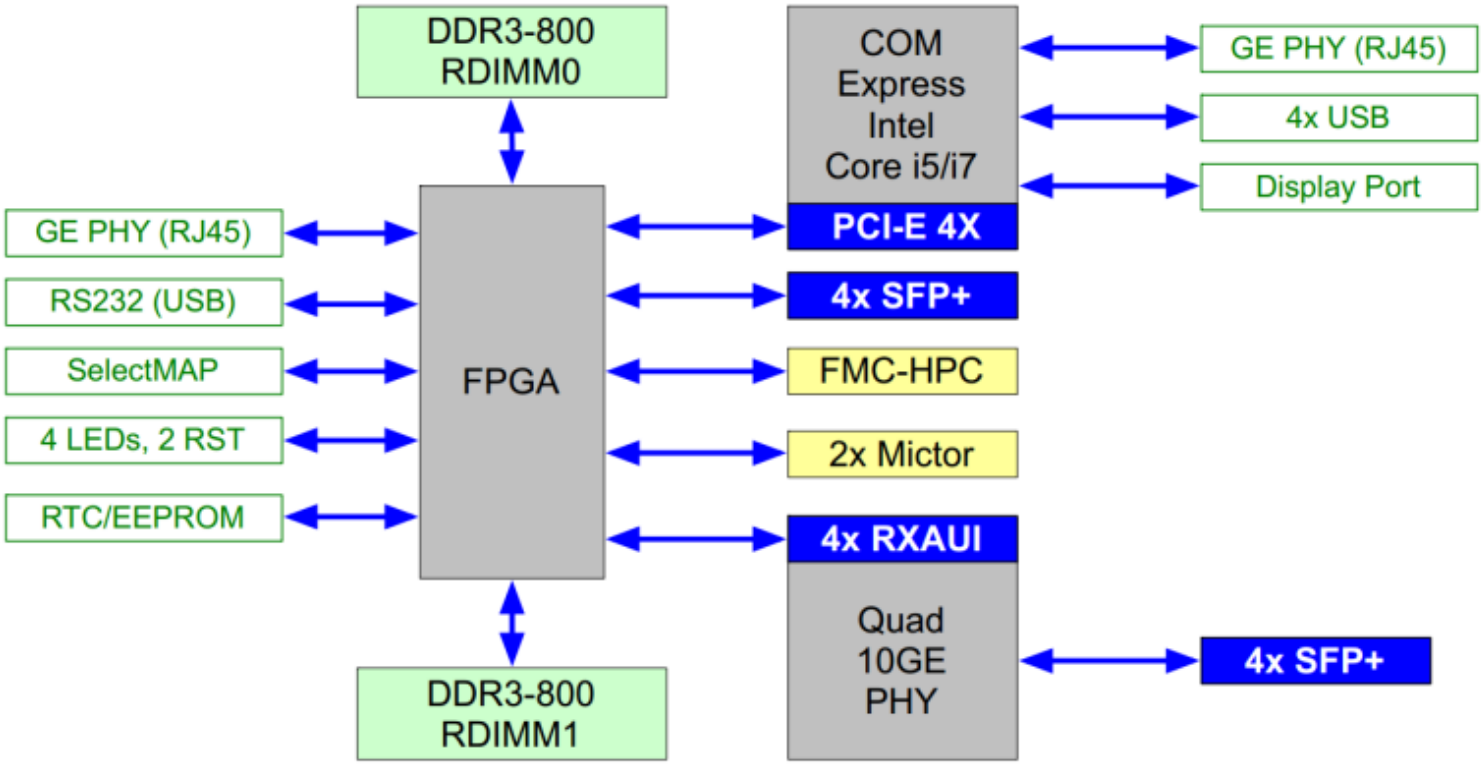

研究所
Physics

- **Hardware**
  - **Based on microTCA.4, which is specific to high energy physics, including RTM(Rear transition module) and AMC(advanced meggazineae card).**
  - **MicroTCA.4 is highly integrated and has advantages of flexibility and reliability, easy to development and cooperation with international labs and companies.**

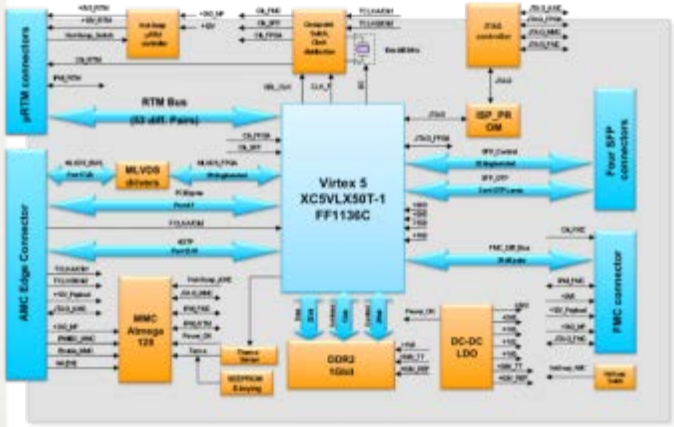

• X ray imaging system based on KB mirrors

Beam energy of x ray >10keV，characteristic energy：23keV；
Beam size at the exit of bendingmagnet：70（vertical）×20（horizontal）μm^2；
Al window size： diameter：2mm，thickness：1mm；
Divergence angle behind the Al window：0.35×0.35$mrad^2$；

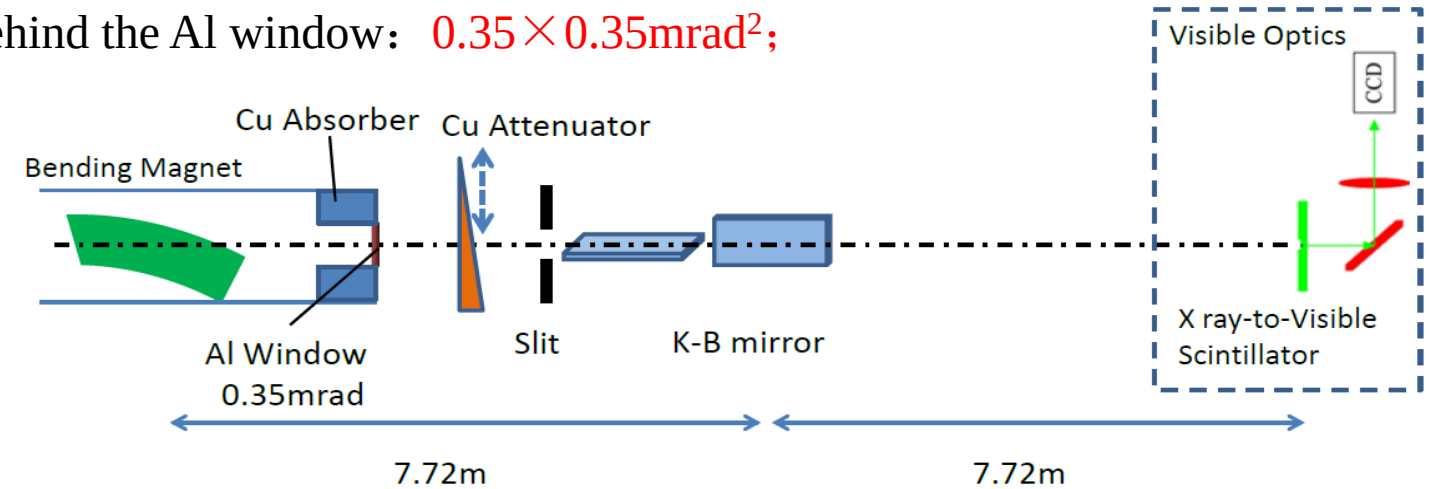

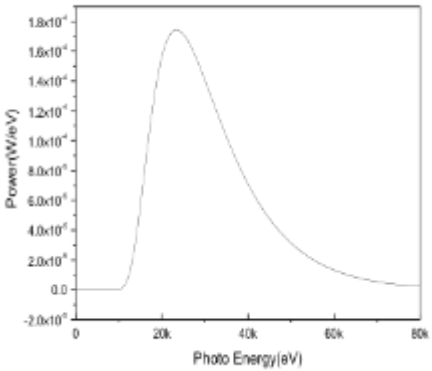

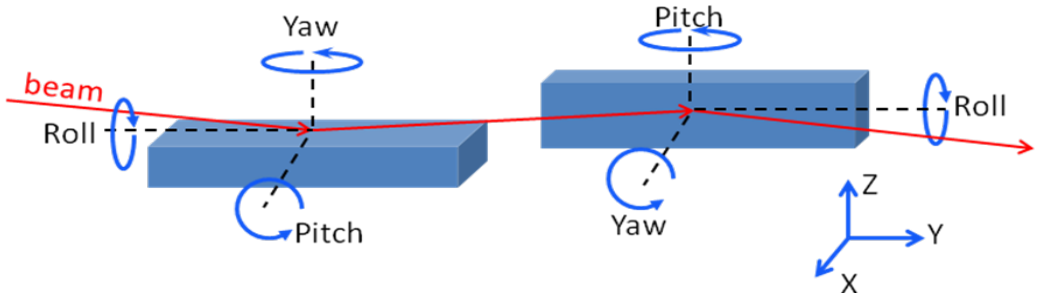

院高能物理研究所
of High Energy Physics

- **Mechanics and alignment**
  - **Vibrating-wire alignment technique --- to meet the tolerance ±0.03mm between magnet to magnet .**
  - **Precision-tuning magnet girder --- be manipulated through control system with the position monitored by sensors, to meet the tolerance ±0.05mm between girder to girder, and would be capable of beam-based alignment in the future.**

Tolerances	Magnet to Magnet	Girder to Girder
Horizontal	±0.03mm	±0.05mm
Vertical	±0.03mm	±0.05mm
Roll angle	±0.2mrad	±0.2mrad

Girder Requirements

Specifications		Design value	Acceptance value
Adjusting Range	Horizontal	±8 mm	±4 mm
	Vertical	10 mm	±10 mm
Adjusting Resolution		0.002mm	0.005mm
Eigen Frequency		>30Hz	>24 Hz

- **Finished**
  - **Design of supporting scheme and selection of adjusting mechanism.**
  - **Derivation of adjusting matrix.**
  - **Study on motion way and range of the adjusting mechanism.**
  - **Design of control process of the girder motion.**

Supporting scheme

- Four V-grooves set perpendicular two by two。

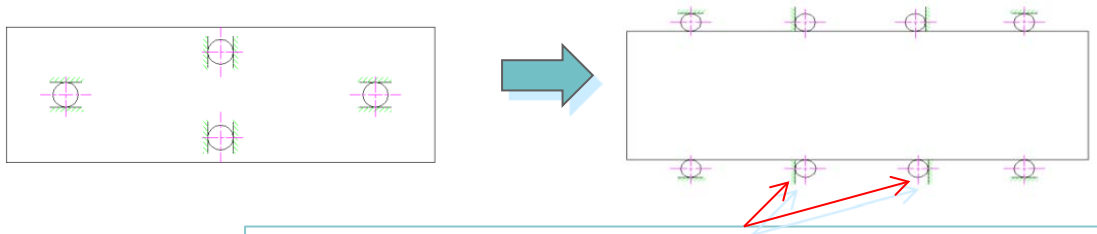

Two of eight contact points are for supplement.

Adjusting mechanism

- Motor driving Cam mover

Specifications	Values
Size(L X W)	3.8m X 0.8m
Cam Load	2.5T
Cam center offset	7mm
Adjusting range	X(-8.7mm~9.4mm)
	Y(-11.8mm~10.4mm)

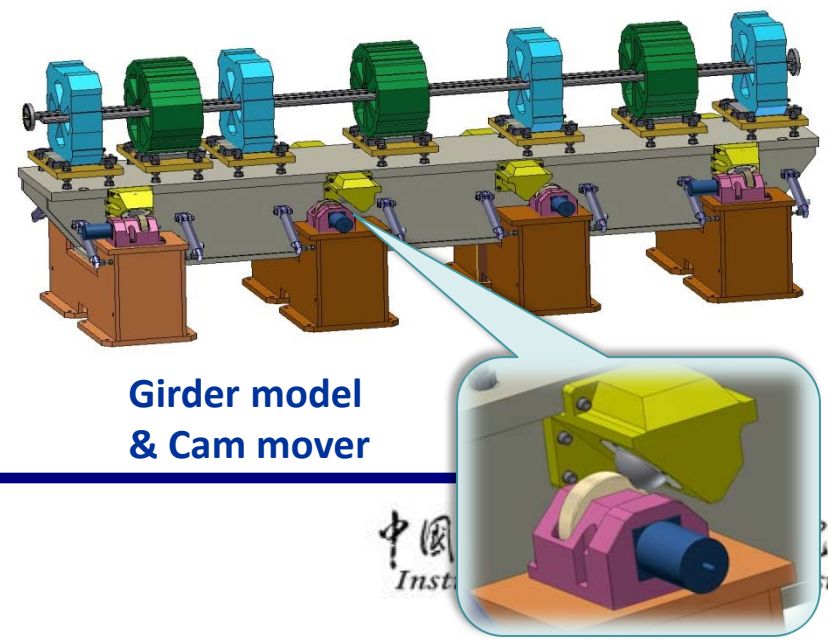

Girder model & Cam mover

- **Vibrating wire technique --- based on the measurement of magnetic axis to meet the tolerance ±0.03mm between magnet to magnet on one girder.**

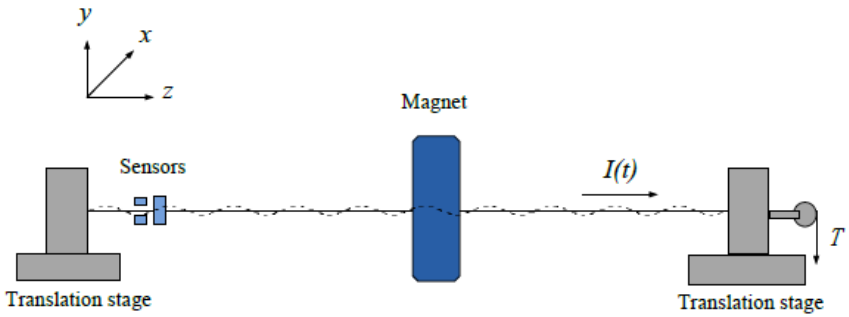

Scheme of vibrating wire experiments

- Finished
  - Derivation of basic theory
  - Design of test bench model
  - Design of data acquisition and control system
  - Design of sag measurement scheme
  - Calculation of vibrating amplitudes
  - Design of the sensor circuit and sensor calibration

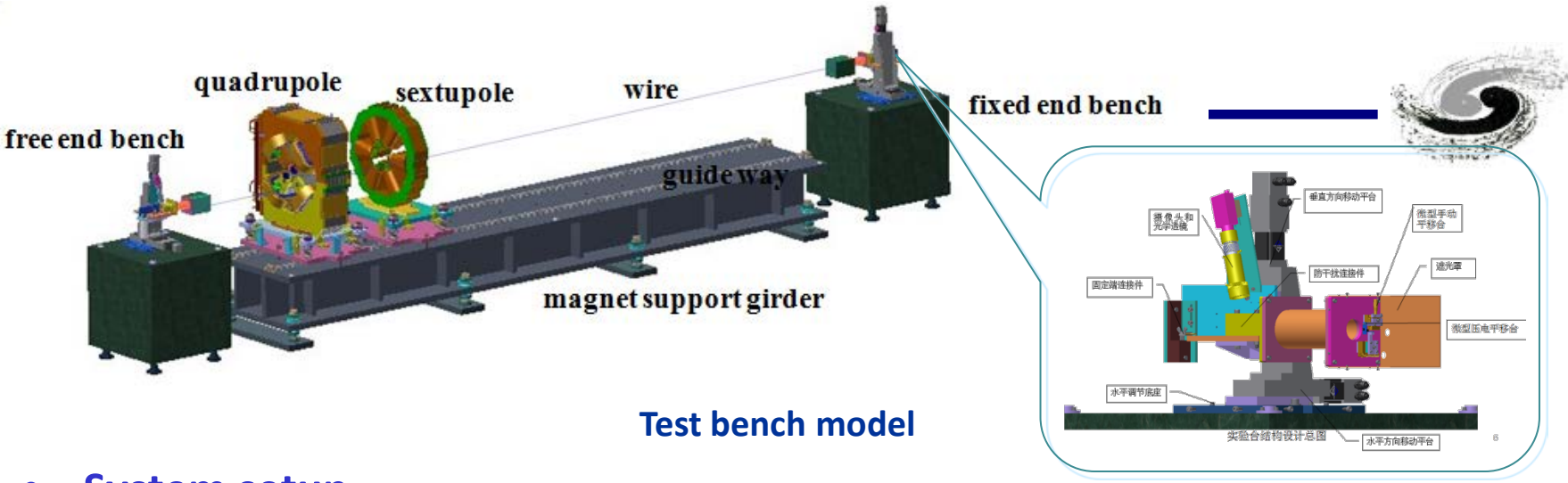

Test bench model

- System setup
  - Wire
  - magnets& girder
  - translation stages on both ends
  - sensors & monitor
  - data acquisition and control system.
- BEPCII magnets will be used.

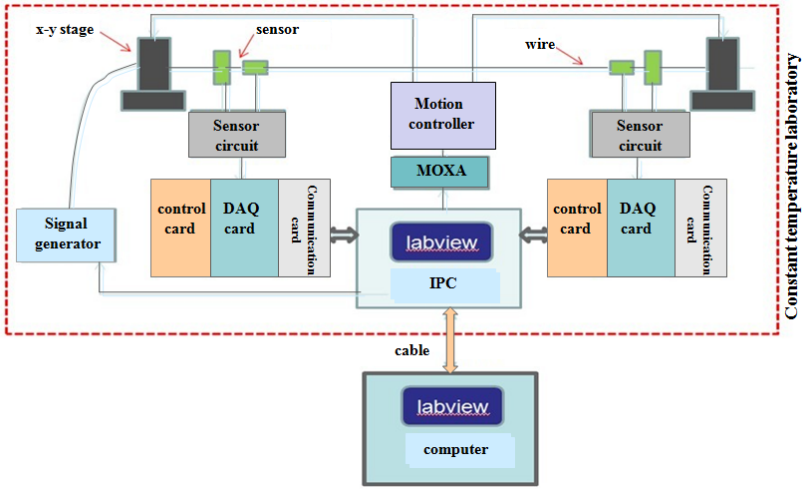

- Linear output range and sensitivity of sensors

Linear range: ~0.12mm
Sensitivity : 30mV/µm

shading voltage				
	Left linear region		Right linear region	
Voltage(V)	9.45	5.8	5.58	9.27
Voltage difference(V)	3.65		3.69	
Displacement(mm)	0.18	0.3	0.38	0.50
Displacement difference(mm)	0.12		0.12	
voltage/displacement(mV/µm)	30.42		30.75	

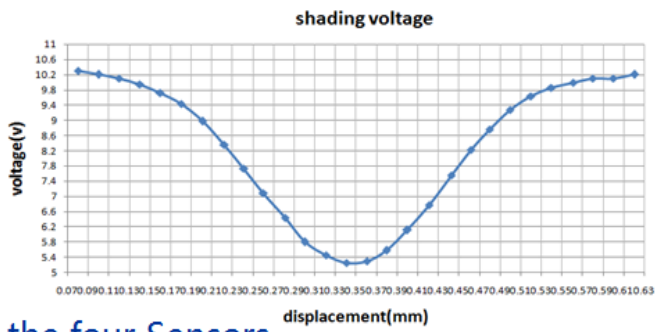

outputs of one of the four Sensors

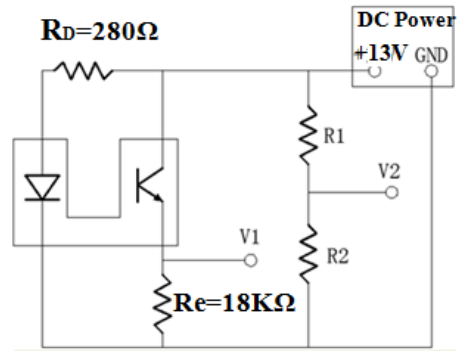

Sensor circuit

- **Signal stability testing**
  - **After filtering, the voltage variation reduced significantly from 20mV to 6mV.**

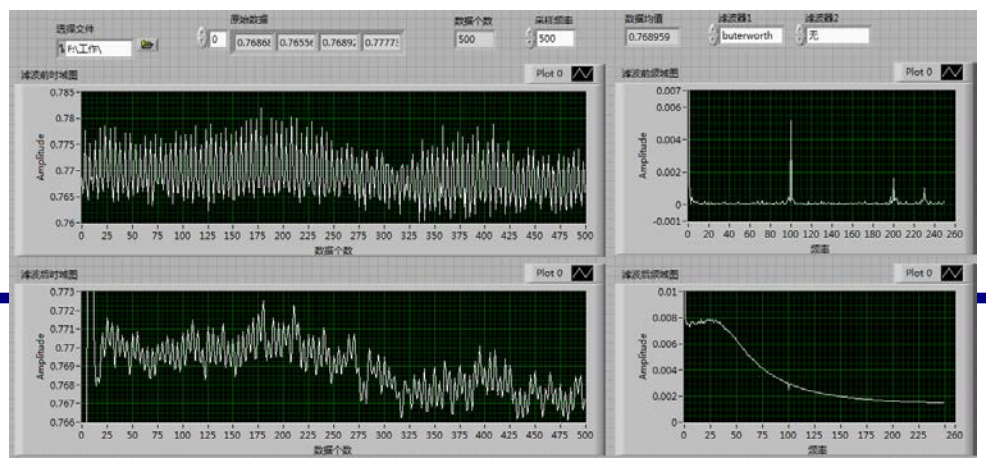

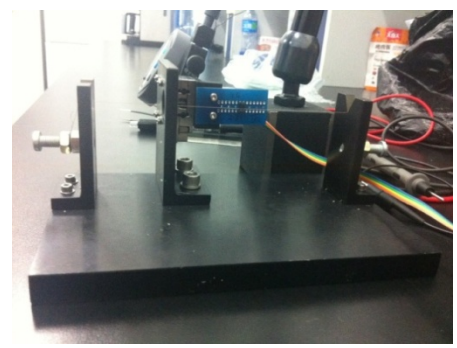

Sensor output test bench

中国科学院高能物理研究所
Institute of High Energy Physics

- **Insertion device**
  - **Low temperature undulator**
  - **Small period SC wiggler → One SC wiggler on BEPCII**

Low temp. undulator	
Length of period	12mm
Effective period No.	160
Length of magnet	～2m
Gap tuning range	g=5~100mm
Gap working range	g=5~9mm
Peak field	>0.7T @ g=5mm
Peak field error	< 0.1 % @ g=5-9mm
K	～0.8
Working temperature	80K

Small period SC damping wiggler	
Length of period	31mm
Minimum gap	10mm
Peak field	1.95T
K	～5.6
Pole No.	20
Total length	～0.3m

Preliminary Design was done

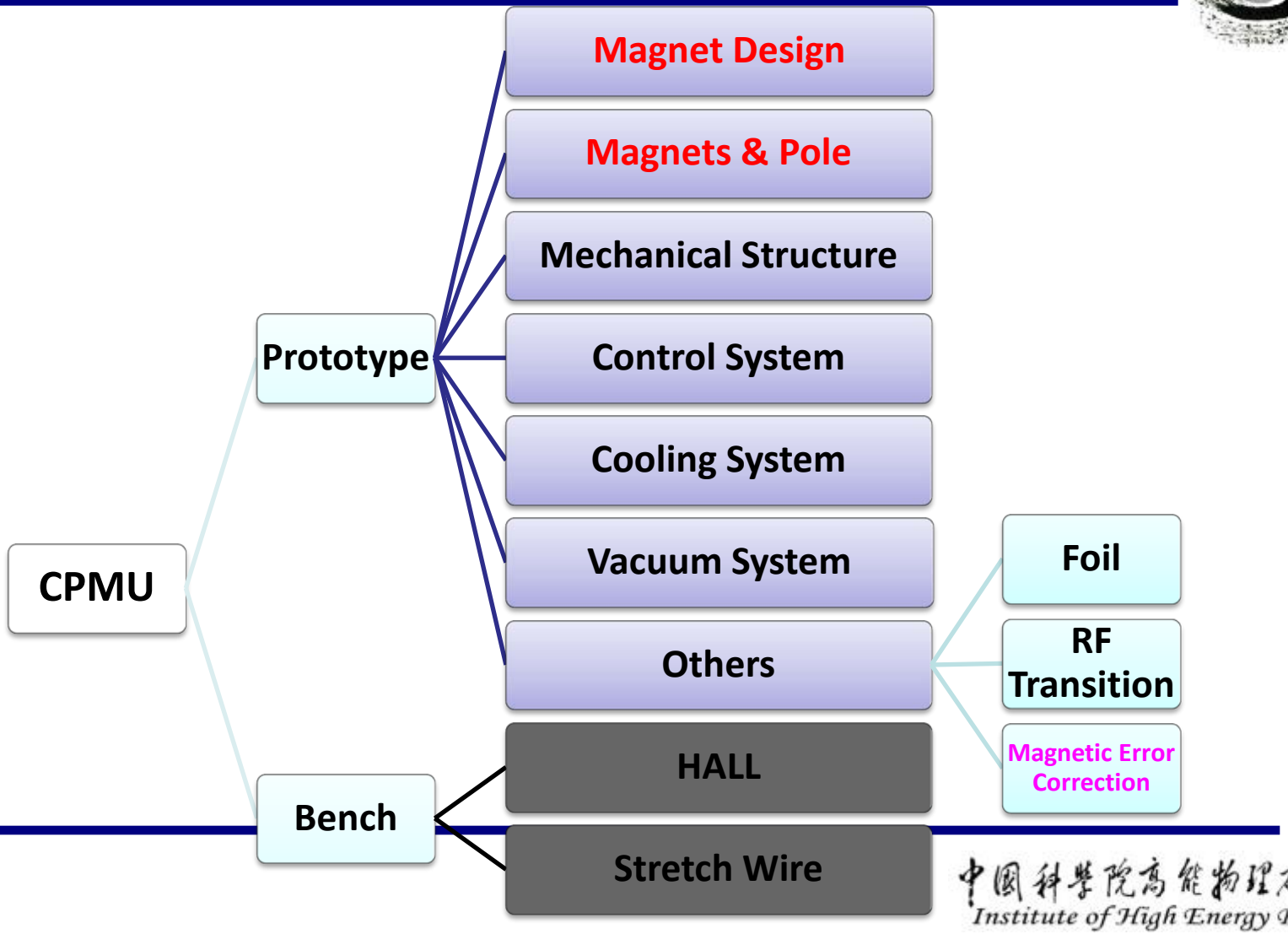

中国科学院高能物理研究所
Institute of High Energy Physics

Magnet Design

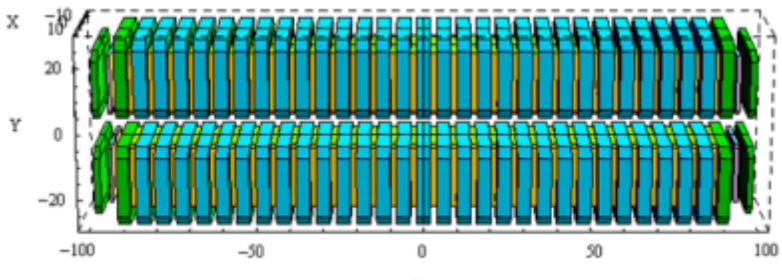

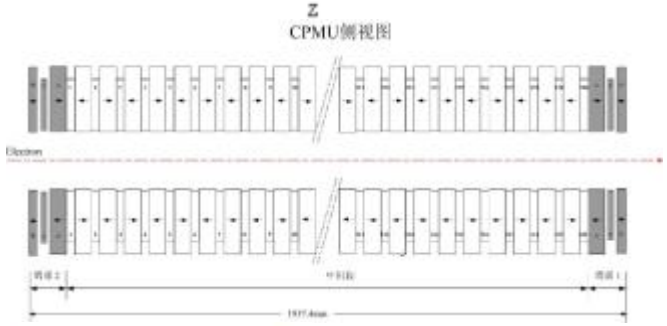

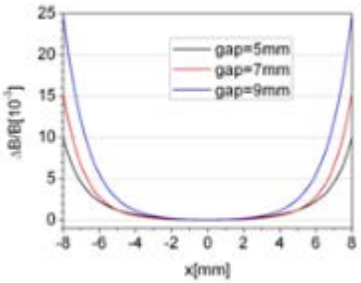

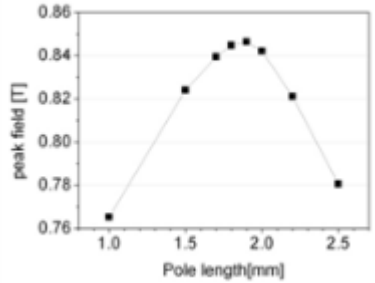

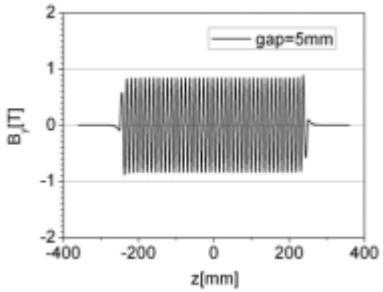

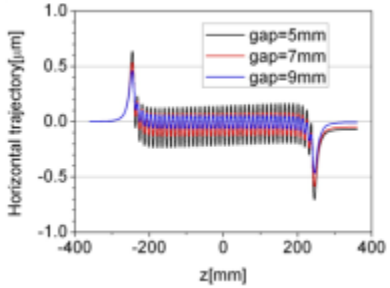

Type	Hybrid
Period Length	12 mm
Working Gap	5～9 mm
Peak Field	0.84 T
Magnet Size	36×24×4.1 mm^3
Pole Size	24×19×1.9 mm^3
End Magnet A	36×24×3.6mm^3
End Magnet B	36×21×1.9mm^3
End Pole p	24×18×1.15mm^3
Air Gap A-p	1.7mm
Air Gap B-p	2.4mm
Phase Error (RMS)	< 6° @ g=5-9mm
First Field Integral (x,y)	<50Gscm
Second Field Integral(x,y)	<20000Gscm^2
Quadrupole Normal/Skew	<50Gs
Sextupole Normal/Skew	<100Gs/cm
Octupole Normal/Skew	<100Gs/cm^2

Cryogenic Property Research on PrFeB

- PrFeB
  - Magnetic
    - Remanence Br
    - Intrinsic Coercivity Hcj
    - Susceptibility μ
  - Thermal
    - Thermal Conductivity
    - Heat Capacity
    - Thermal Diffusivity
    - Density
  - Electrical
    - Electrical Conductivity
  - Mechanical
    - Young's Modulus
    - Poisson Ratio
    - Compression Strength

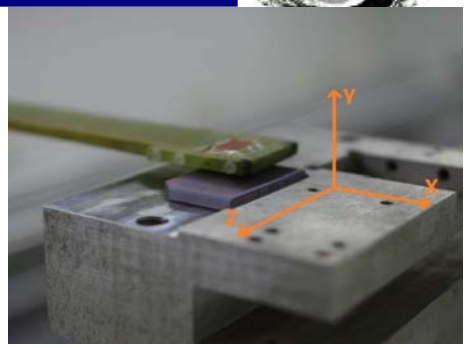

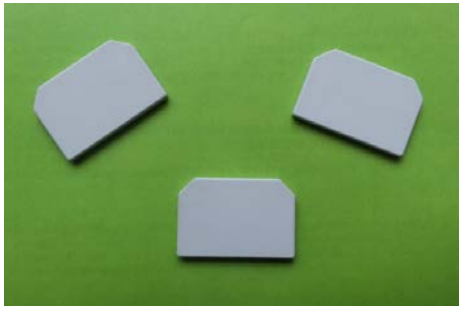

Mechanical Structure

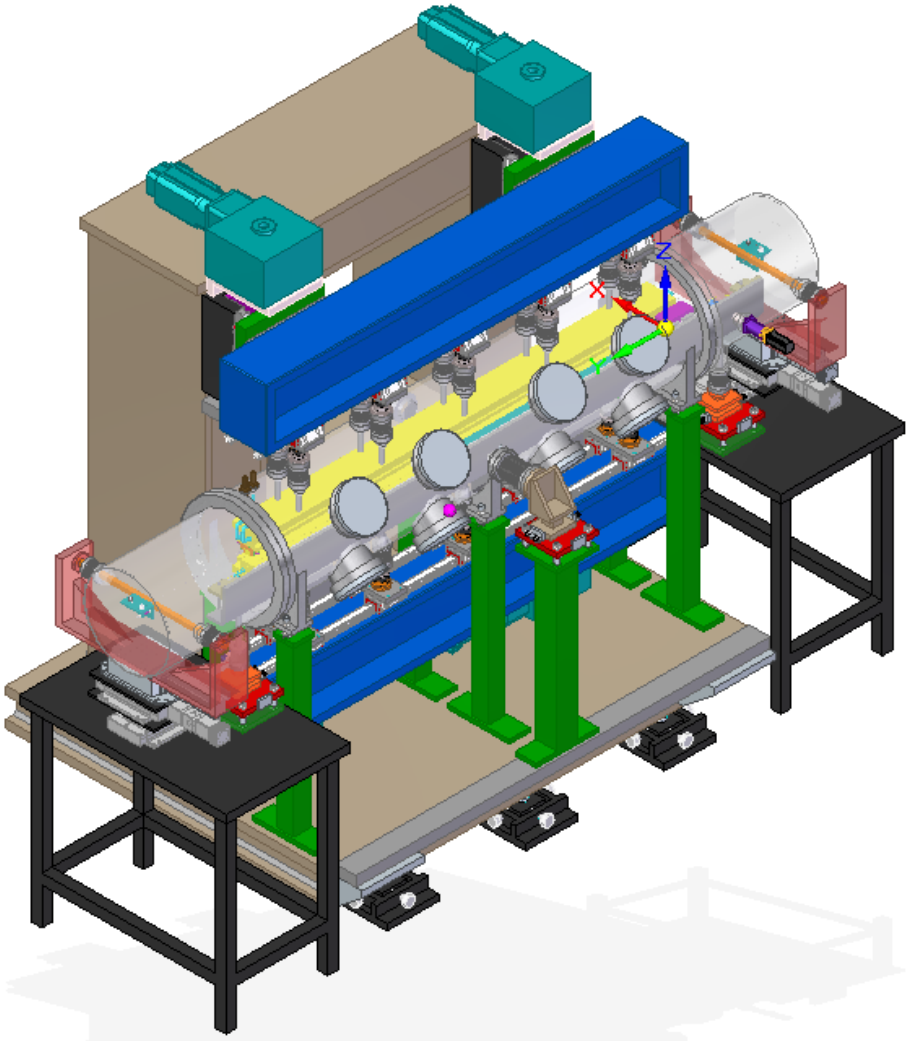

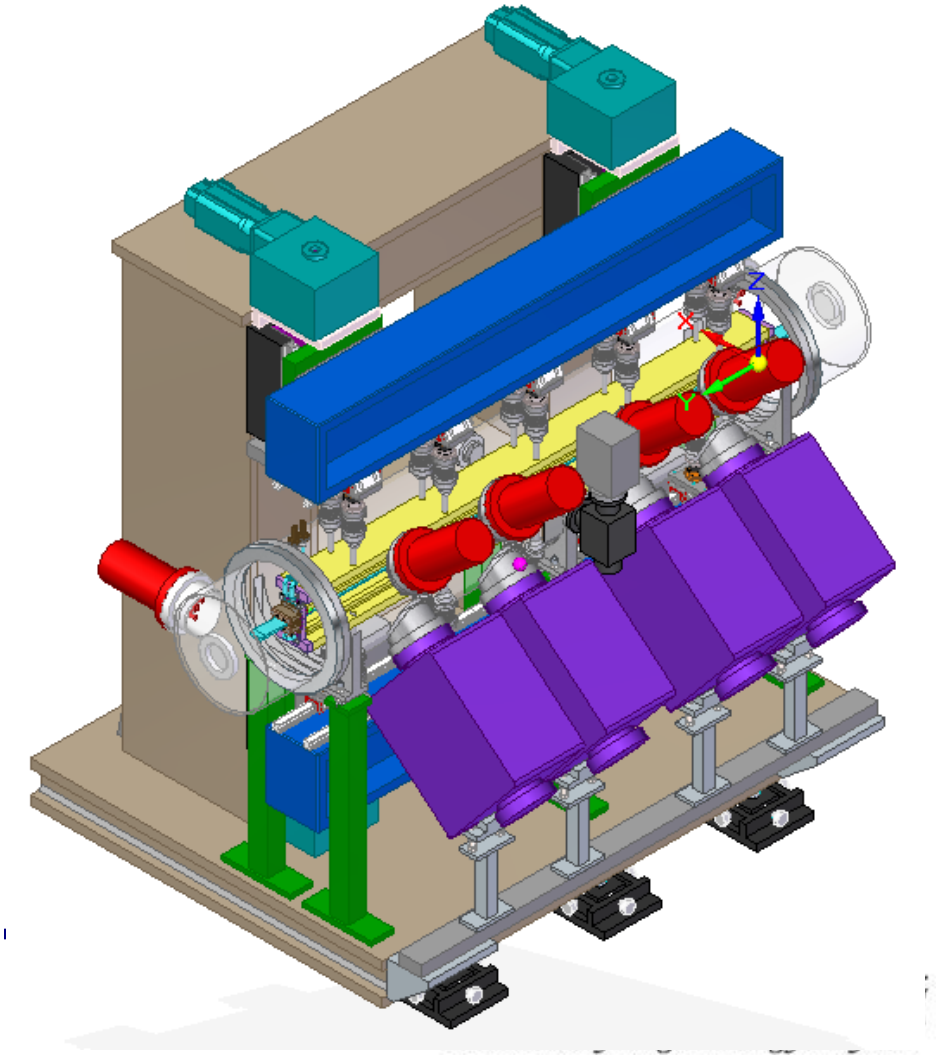

Control System

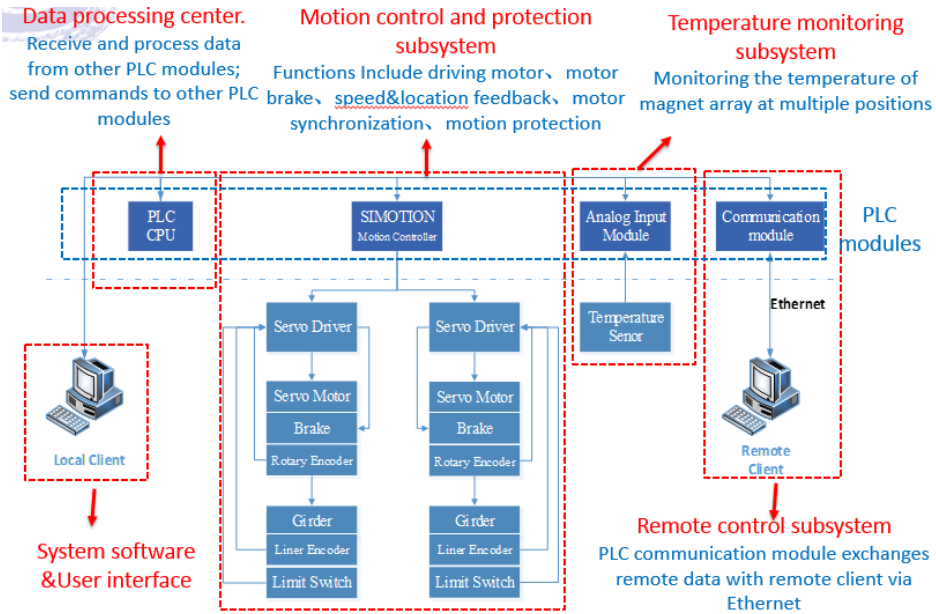

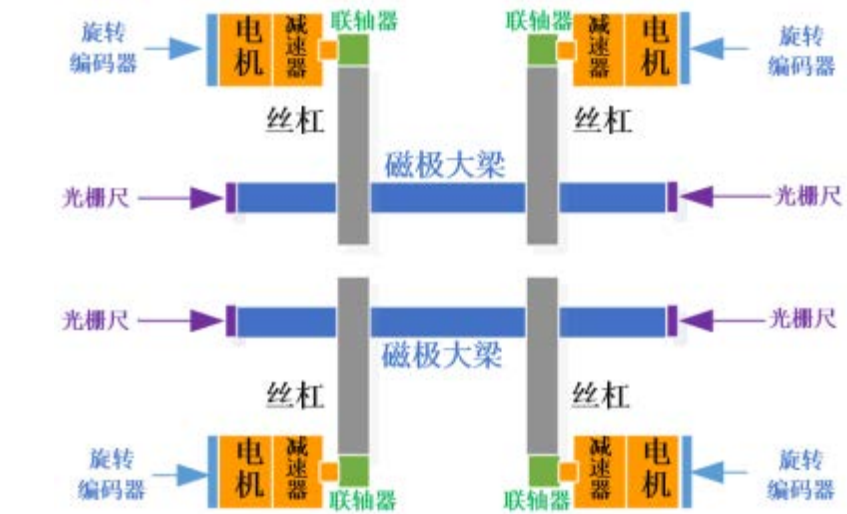

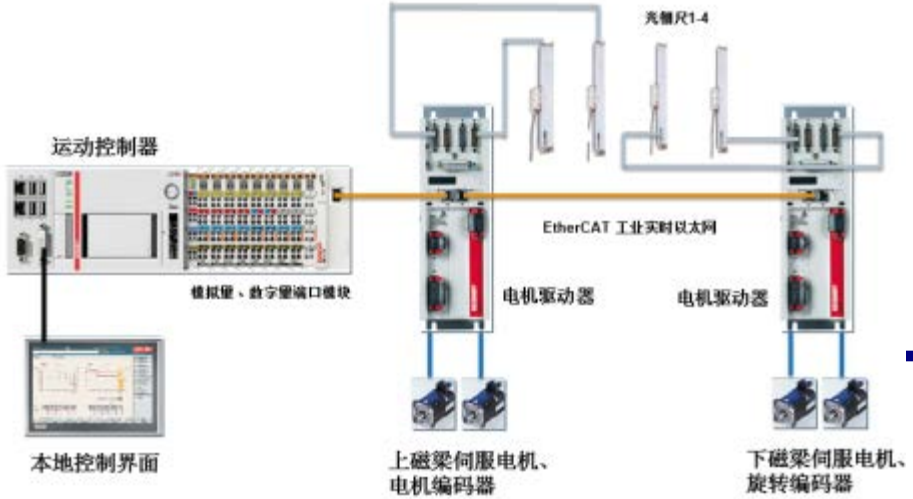

Cooling System

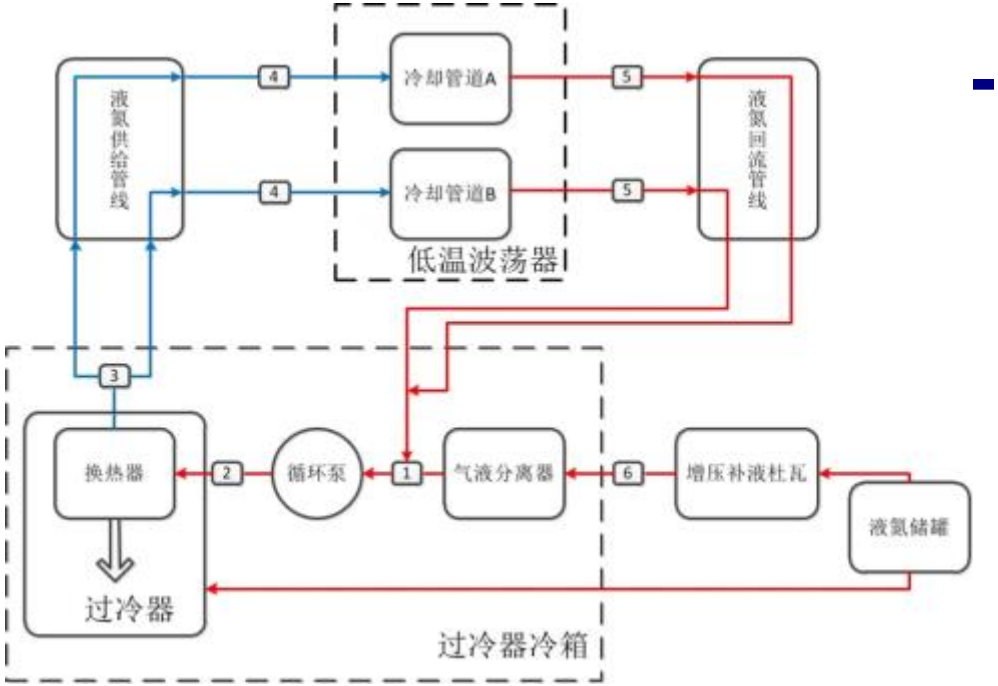

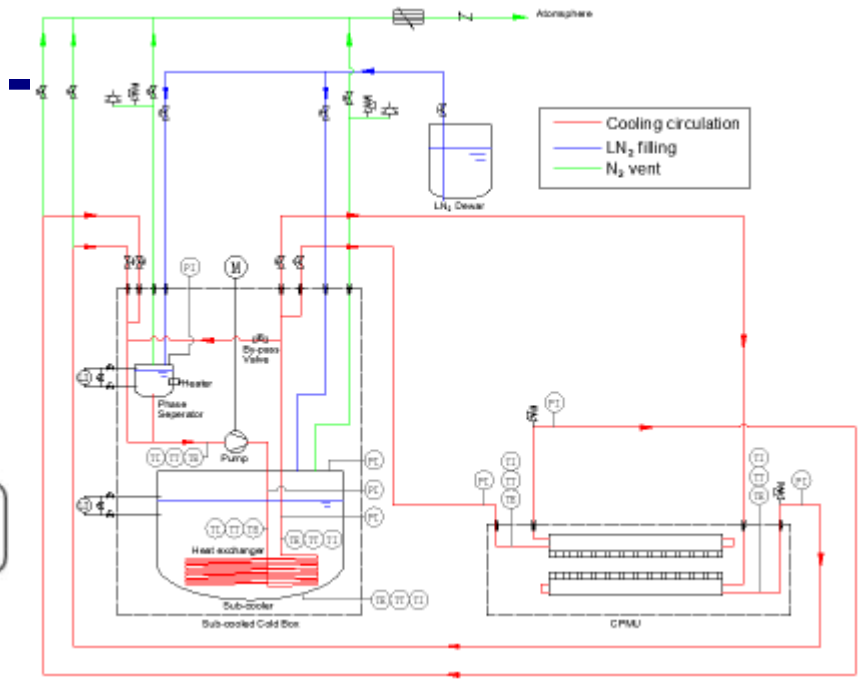

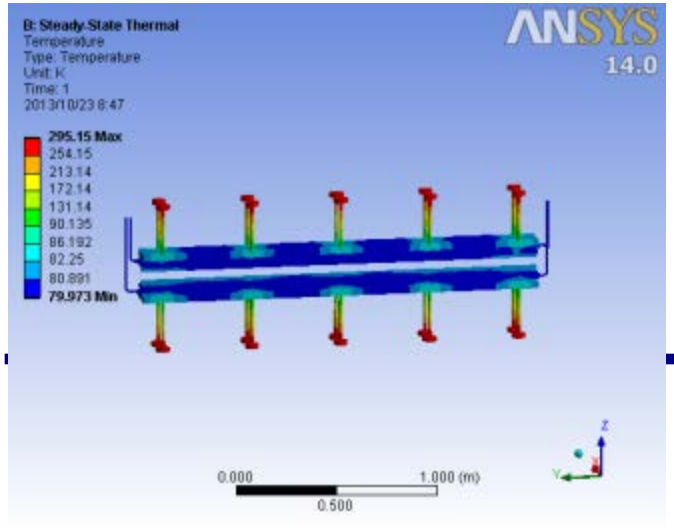

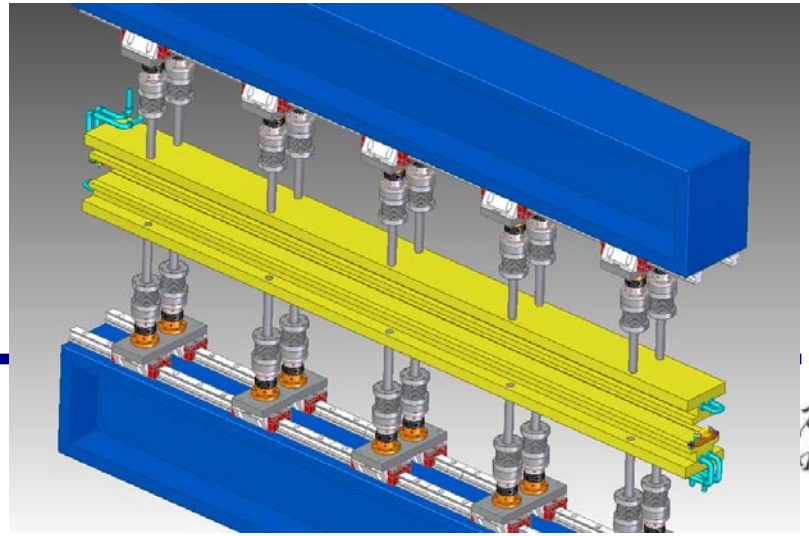

研究所
Physics

Magnetic Measurement Bench

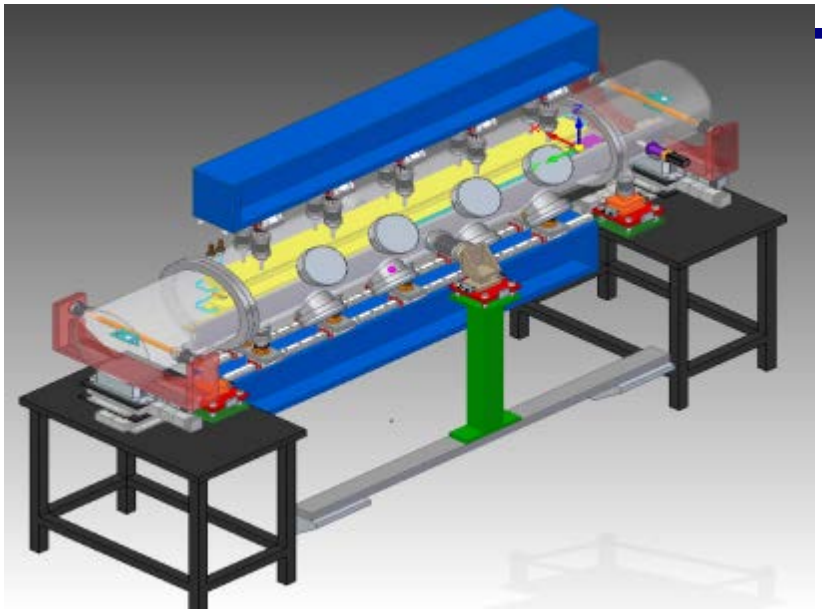

Hall

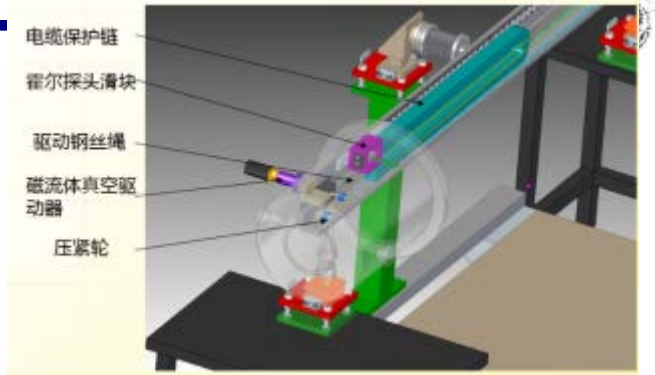

Stretch Wire

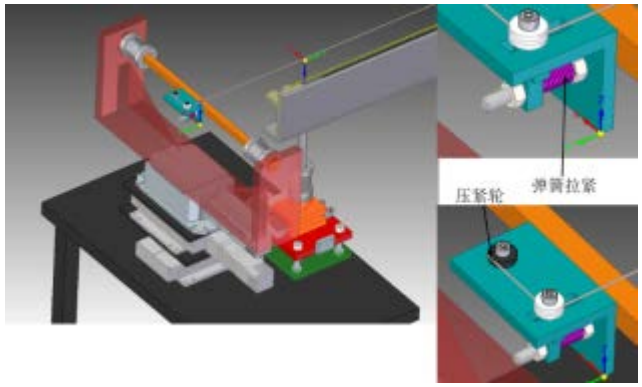

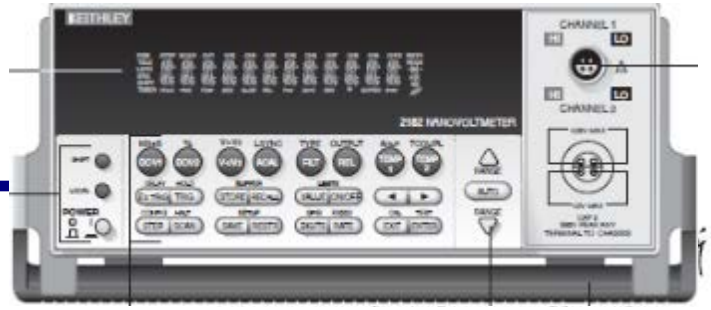

- **Superconducting wiggler SC-3W1**
  - A superconducting wiggler is designed to verify some beam line technologies used for BAPS
  - The wiggler will be installed on the BEPCII storage ring to replace the original permanent magnet wiggler 3W1
  - Design parameters
    - Vertical beam stay clear
      - 39mm (for collider mode)
    - Good field region
      - Horizontal: ±23mm
      - Vertical: ±10mm
    - Field quality
      - First order integral: 500Gs•cm
      - Second order integral: 50000Gs•cm^2

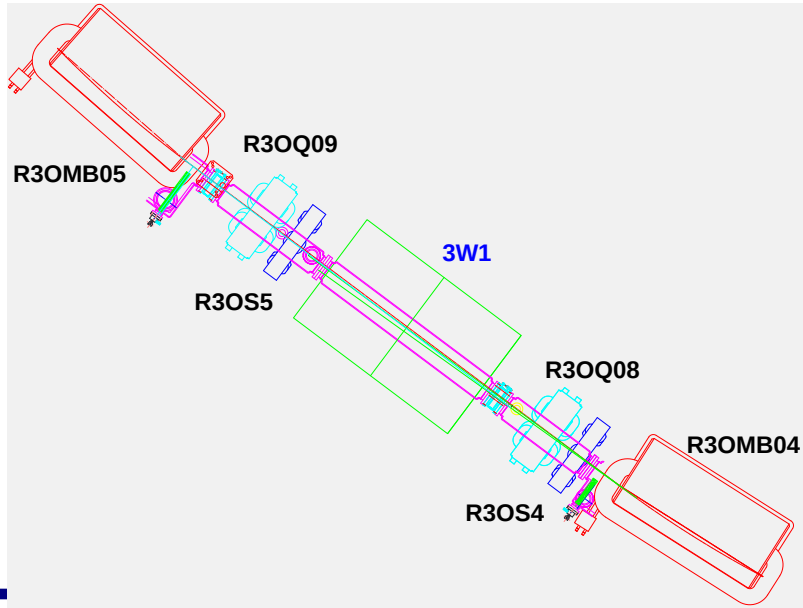

- **Physics design of SC-3W1 is completed.**

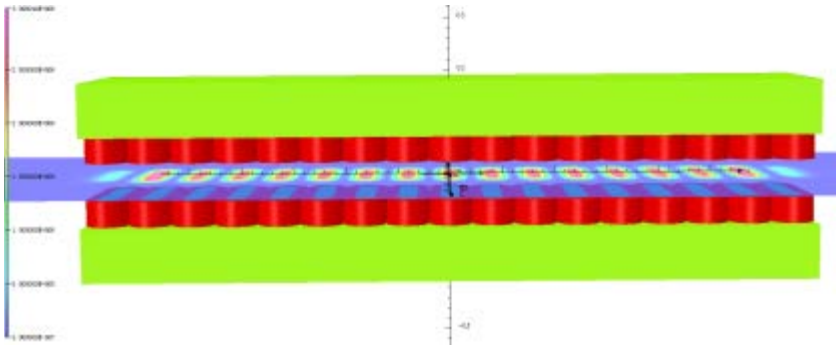

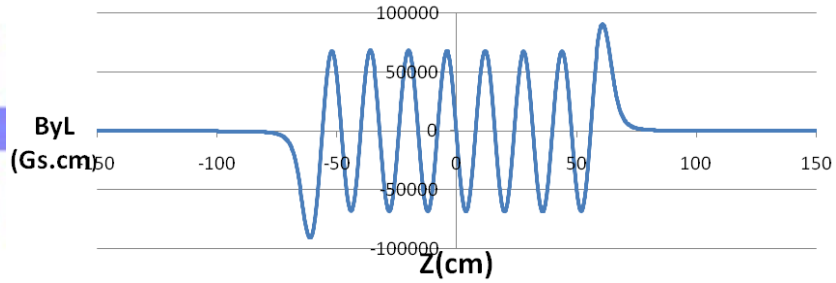

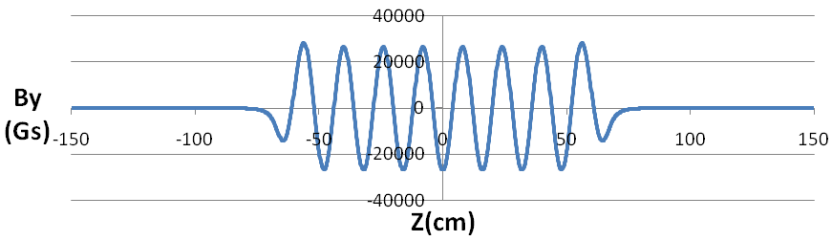

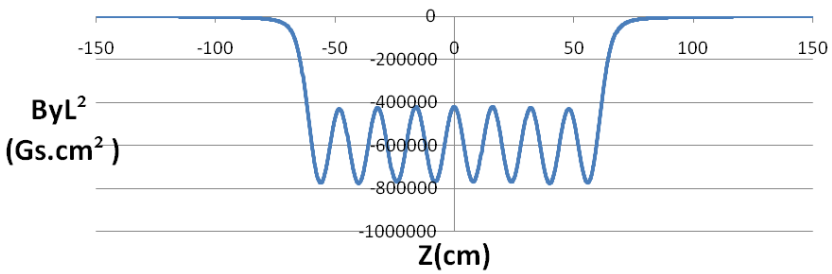

- **Design parameters of the SC-3W1**

Peak field [T]		3
Operating current [A]		400
Pole number (main + side)		15 + 2
Period [mm]		160
Gap [mm]		60
Magnet length [mm]		1360
Coil turns		32×24
Inductance [H]		3.6
NbTi wire specs	Cross section [mm]	1.20×0.75
	Insulation [mm]	0.04
	Cu:SC ratio	1.3
	Critical current [A]	604@7T，408@8T

- **Cryogenics consideration**
  - **Cryo-coolers: 2 - 4.2K/60K, 2 - 20K/60K**

	Estimated heat load (x2)	Cooling capacity
4.2K LHe	2.33 W	3 W
20K shield	9.2 W	24 W
60K shield	155.5 W	200 W

  - **Current lead: copper + high temperature superconductor**
- **Quench protection consideration**
  - **High magnet inductance and high stored energy**
  - **Active quench detection system**
  - **Quench protection circuit with dump resistor**

- **Test environment**
  - **Simulate the real environment for magnets on girder, etc.**

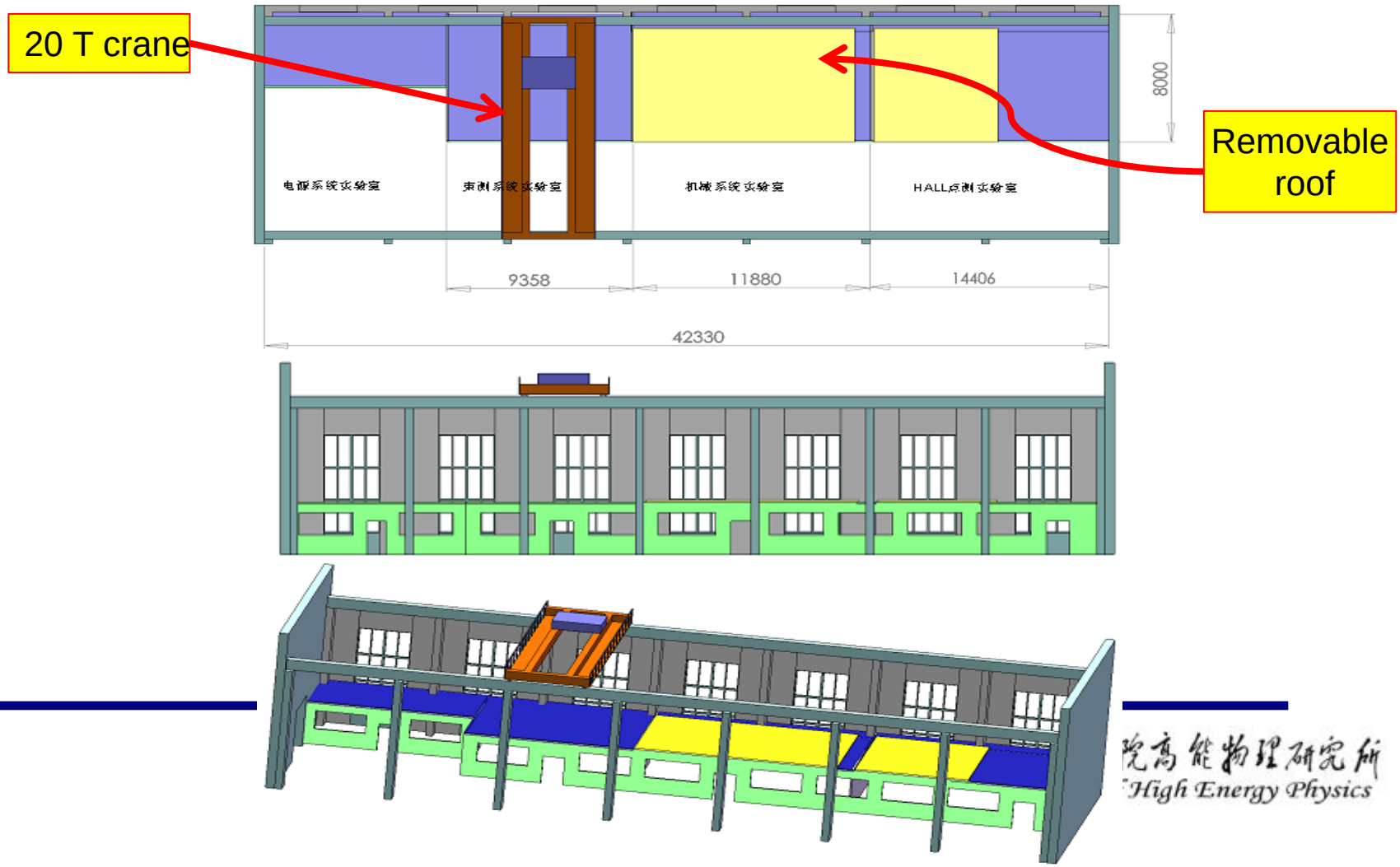

- **RF system**
  - **Digital low level control system**
  - **Integrate solid state amplifier and cavity system**

Summary

- BAPS is the next light source in China, with a high energy and USR machine.
- R&D project of the BAPS started in IHEP, although the budget is still not in our pocket.
- Accelerator physics design and R&D on technologies are on the way.

Thanks for your attentions !