Welcome and Overview

APS MBA Lattice
Timing and Dynamics Breakout
David Keavney (keavney@aps.anl.gov)

Outline

1. Opportunities for Timing with an MBA Lattice
2. MBA Lattices May Require/Enable New Timing Strategies
3. Goals of the Timing Breakout Session

This is a broad community…

(Structural, Magnetic, and Electronic Dynamics, Atomic/Molecular Physics, Biological Systems, Shock Dynamics…)

Opportunities with a Multi-bend Achromat Lattice

- Transverse coherence
- Small beams
- All of the probes become nanobeams, or coherent, or both

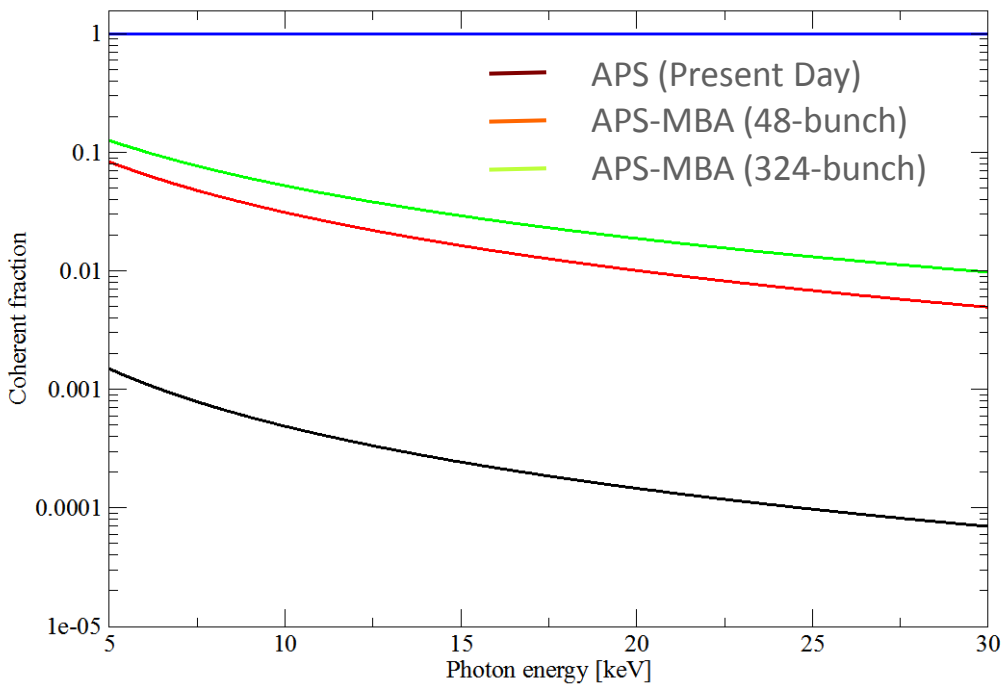

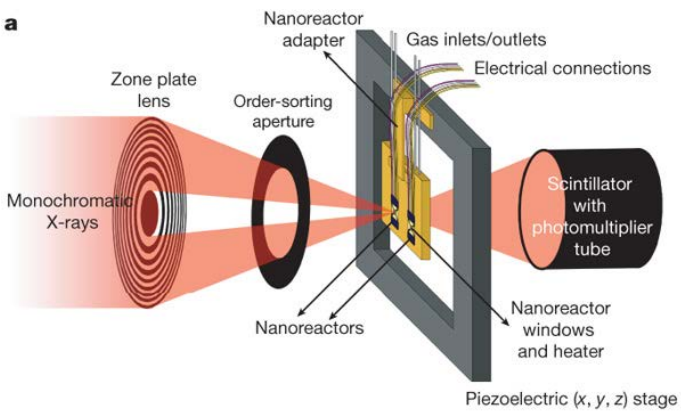

MBA Lattices Will Enable New Timing Strategies

Fill pattern changes represent opportunities and challenges

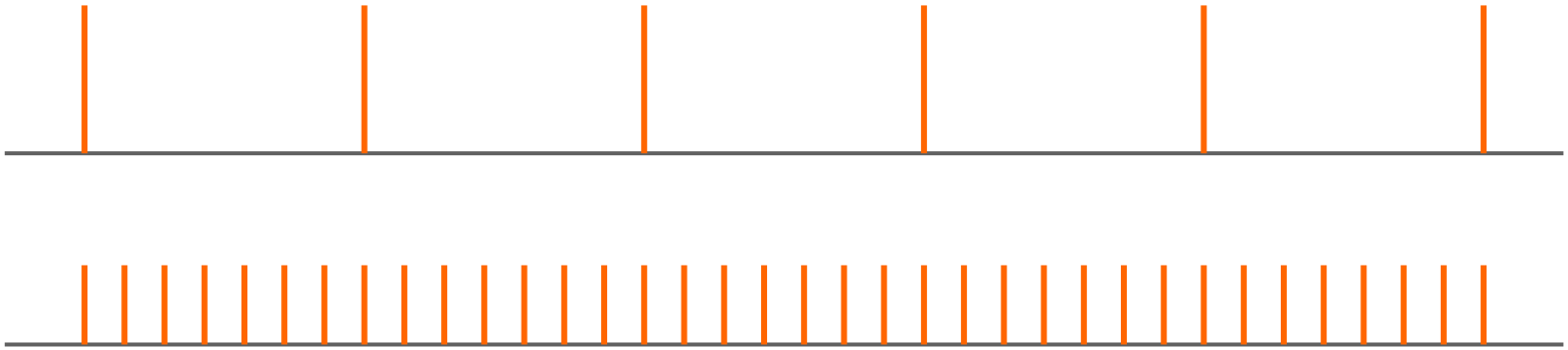

Proposed Fill Patterns (Subject to Change)		Normal Mode	Special Mode
Present Day APS	Bunch Frequency	6.5 MHz	88 MHz
	Bunch Duration (FWHM)	79 ps	52 ps
	Current per Bunch	4.25 mA	0.31 mA
APS w/MBA	Bunch Frequency	88 MHz	13 MHz
	Bunch Duration (FWHM)	42 ps	157 ps
	Current per Bunch	0.62 mA	4.2 mA

How to respond to these challenges?

1. Influence the design

Ensure timing is prioritized

- Timing characteristics of the MBA lattice are still evolving, input from the community has already influenced the bunch patterns
- This workshop is one opportunity to have timing needs heard
  - Bunch Duration
  - Current Per Bunch
  - Special Modes
  - Emittance – Timing Tradeoffs

Timing at the APS with Multibend Acromat Lattice

Superconducting harmonic cavities

A. Nassiri

A higher harmonic RF cavity can be used to modify the potential in the RF bucket to either lengthen the electron bunch for improved lifetime or to compress the electron bunch.

Preliminary estimate of bunch compression

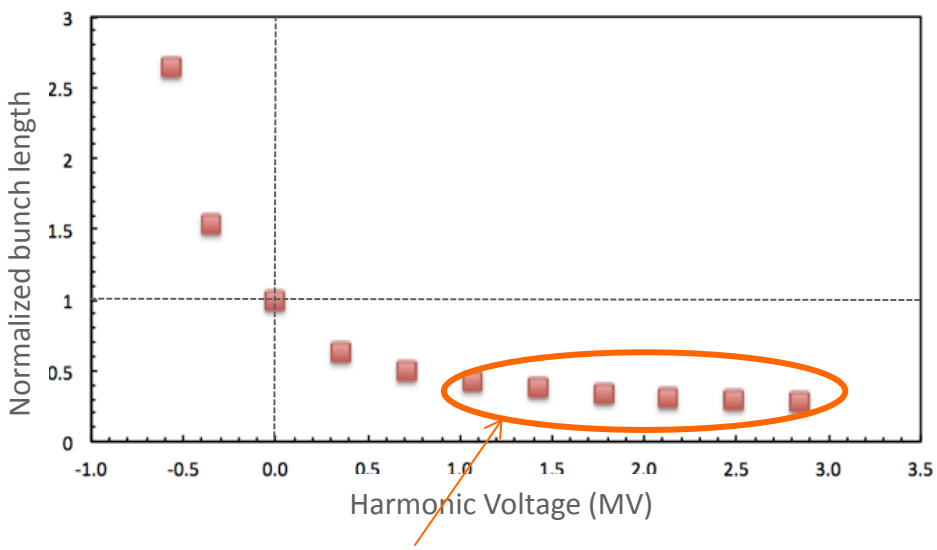

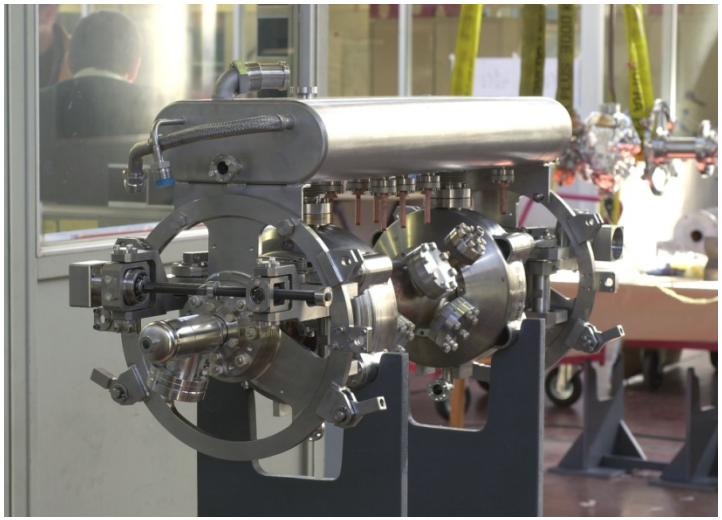

A 2-cell SRF harmonic cavity for Super-3HC Project at ELETTRA for bunch lengthening[1]

Potential factors of 2-3:

88 MHz mode: 42 ➔ 14 ps (FWHM)

117 MHz mode: 28 ➔ 9.3 ps (FWHM)

Does not include beam dynamics and non-linear effects

[1] G. Penco, Elettra

SPX might work in the MBA lattice

- The new MBA lattice may allow the implementation of a novel SPX implementation. (discussions with Borland)
- The JLab design would not be feasible because of the 4m long cryostat necessary, but Argonne is working on a new design, ~0.5 meter long which would provide 2 MV deflection and ultimately deliver 2 ps x-rays with superb spatial beam profile.
- This new deflecting Nb superconducting cavity is under development in an LDRD which shall conclude with RF tests.
- Further development would require R&D.

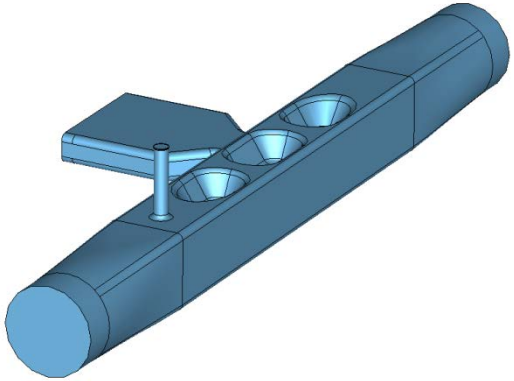

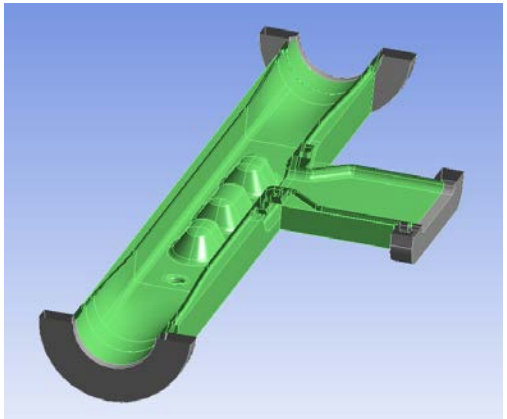

Quasi Waveguide Multicell Resonator
Patent application is pending

Voltage = 2 MV
P_loss = 3.55 W
Epeak = 54 MV/m
Bpeak = 77.2 mT
R/Q = 550 Ohms
F=2815 MHz

Slide adapted from material provided by S. Zholents

2. Exploit new opportunities with coherence

Use coherence and small beams to work differently

XPCS within a pulse

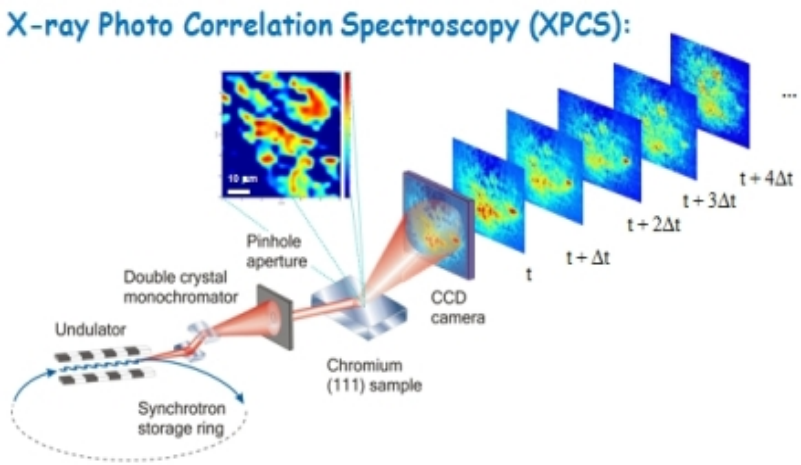

- Most SR pulses: *0 photons/speckle*
- Some SR pulses: *1 scattered photon/speckle*
- A few SR pulses: *2 scattered photons/speckle*: measure delay τ and bin the result ~ $g_2(Q,\tau)$
- Measure delayed coincidences from all SR bunches with ~1 ps resolution
- Need rf streak camera and very fast detector and data system

3. New ways to do timing experiments

Exploit new timing structures to gain something you cannot get doing things the way you normally do them

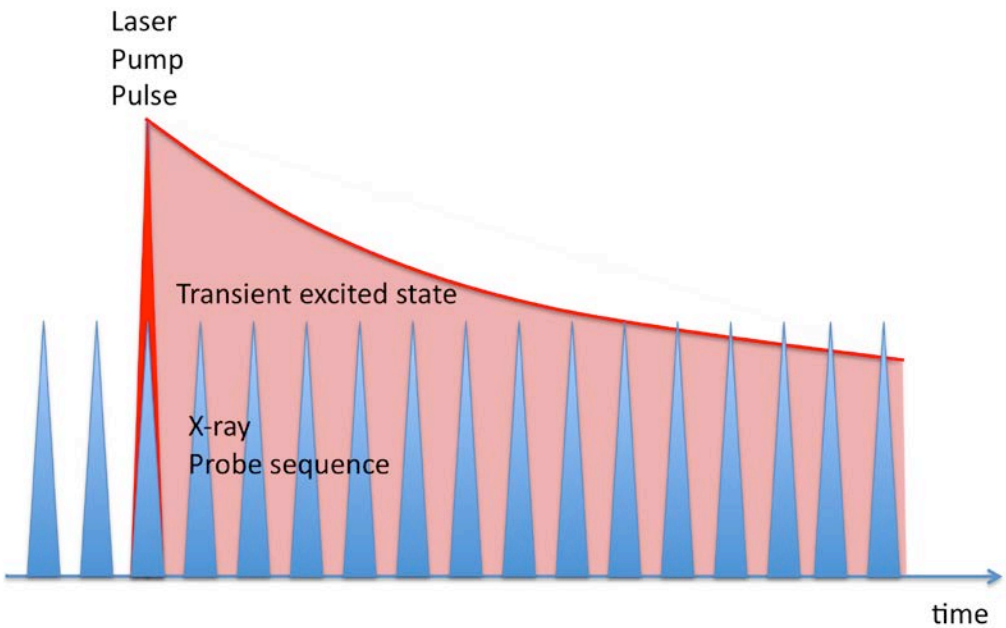

L. Stebel, et al., RSI 82, 123109 (2011)
(Elletra)

- Slow pump, fast probe
- Needs detector R&D
- May want even more bunches

The outcome of this workshop should be some combination of all three

This is a broad community

What happens will rest on the strength of the science case

Goals of the workshop

Key Questions:

- How brightness, coherence, duty cycle, and pulse duration flexibility enable you to work in new ways.
- What groundbreaking scientific opportunities do you see that would be enabled by beam sizes of 500 nm? of 50 nm? of 1 nm?

Goals:

- **1. Science**
  - Identify new, groundbreaking scientific opportunities enabled by an APS MBA lattice
    - Stretch goals (Where you want to be in ten years)
- **2. Needs**
  - Identify needs for timing modes
  - Emittance/Pulse duration/Current per bunch tradeoffs
  - ps – pulse duration sources?
- **3. Recommendations**
  - Identify R&D needs for detectors, lasers, optics, experimental facilities, shared facilities, etc.

Committees

Internal

- David Keavney
- Ercan Alp
- Eric Dufresne
- Tim Graber
- Steve Southworth

External

- Paul Evans
- Philip Anfinrud
- Bill Bailey
- Lin Chen
- David Reis

Logistics

- Give feedback now, or send by email
- Presentation tomorrow will give our input to the rest of the meeting
- Workshop report still open

- Please move up
- Remote viewers may not be able to hear audience well
  - Repeat questions
- Remote viewers enter questions via chat, Eric will relay them

Agenda

Time	Title and Speaker
1:00 – 1:15	Welcome and Overview “Timing on MBA Machines” – David Keavney
1:15 – 1:45	"Opportunities for Nanoscale Dynamics at APS-MBA"- Linda Young
1:45 – 2:15	"Bunch Structure and Nuclear Resonant Scattering: Challenges and Opportunities" - Ercan Alp
2:15 – 2:30	“Mesoscale Dynamics in Complex Systems” - Haidan Wen
2:30 – 2:50	"Magnetization Dynamics and X-Ray Spectroscopy: Opportunities and Challenges at Low Emittance Storage Rings" - Dario Arena
2:50 – 3:10	Discussion
3:10 – 3:30	Break
3:30 – 4:00	"Combining Coherence and Dynamics to Probe Novel Electronic Materials" - Paul Evans
4:00 – 4:30	"Picosecond Photobiology: What can we do today, and what would we like to do tomorrow?"- Phil Anfinrud
4:30 – 5:00	“Time Resolved Coherent Diffractive Imaging” - Ian Robinson
5:00 – 5:30	Discussion