Argonne NATIONAL LABORATORY

... for a brighter future

SPX Overview and Options

Ali Nassiri (on behalf of the SPX Team)

February 15, 2008

U.S. Department of Energy

UChicago Argonne LLC

Office of Science
U.S. DEPARTMENT OF ENERGY

A U.S. Department of Energy laboratory managed by UChicago Argonne, LLC

Short X-Ray Pulse Generation Workshop

ANL Team

B. Adams, A. Arms, N. Arnold, T. Berenc, M. Borland, T. B. Brajuskovic, D. Bromberek, J.Carwardine, Y-C. Chae, L.X. Chen, A. Cours, J.Collins, G. Decker, P. Den Hartog, N. Di Monti, D. Dufresne, L. Emery,M. Givens, A. Grelick, K. Harkay, D. Horan, Y. Jaski, E. Landahl, F. Lenkszus, R. Lill, L. Morrison, A. Nassiri, E. Norum, D. Reis, V. Sajaev, G. Srajer, T. Smith, X. Sun, D. Tiede, D. Walko, G. Waldschmidt, J. Wang, B. Yang, L. Young

Collaborators

V. Dolgashev (SLAC)

R. Rimmer (JLab)

H. Wang (JLab)

P. Kneisel (JLab)

L. Turlington (JLab)

Derun Li (LBL)

J. Shi (Tsinghua University- Beijing). Grad. student

Outline

- Introduction
- “Crabbing” scheme
- Summary of initial project goals and constraints
- Timeline
- Options
- Closing remarks

Introduction

- SPX has always been a step towards the long-term goal of CW source
- SPX (room-temperature system) was pushed aggressively
  - Opportunity to get capability before LCLS
  - Provide limited capability
  - Allowed us to get an early start on some important areas
    - *Precision timing and synchronization*
    - *LLRF and RF control*
    - *Beamline/accelerator integrated operation*
  - Create ability to do some preliminary science experiments, build case for CW
  - Build momentum for overall effort
  - Exciting new possibilities

Crabbing Scheme†

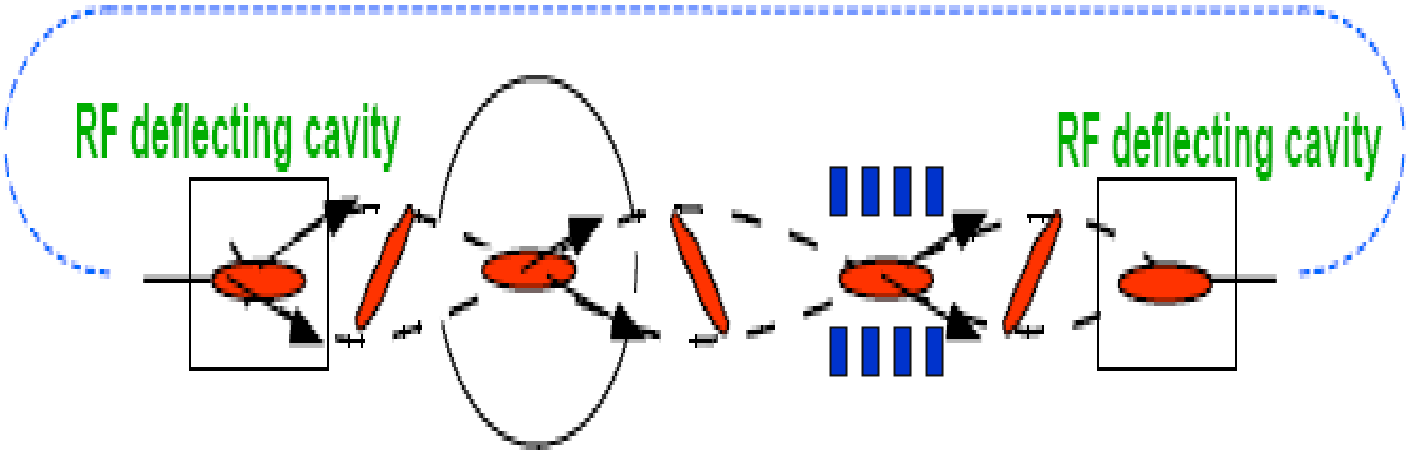

- Deflecting cavity introduces angle-time correlation into the electron bunch "crabbing" the beam. B_x kicks head and tail of the bunch in opposite directions in the vertical plane.
- Electron oscillate along the orbit
- Bunch evolution through the lattice results in electrons and photons correlated with vertical momentum along the bunch length
- Second cavity at $n\pi$ phase cancels "kick"; rest of the storage ring unaffected

†A. Zholents, P. Heimann, M. Zolotorev, J. Byrd, NIM A 425(1999), 385

Two-Sector Layout[1]

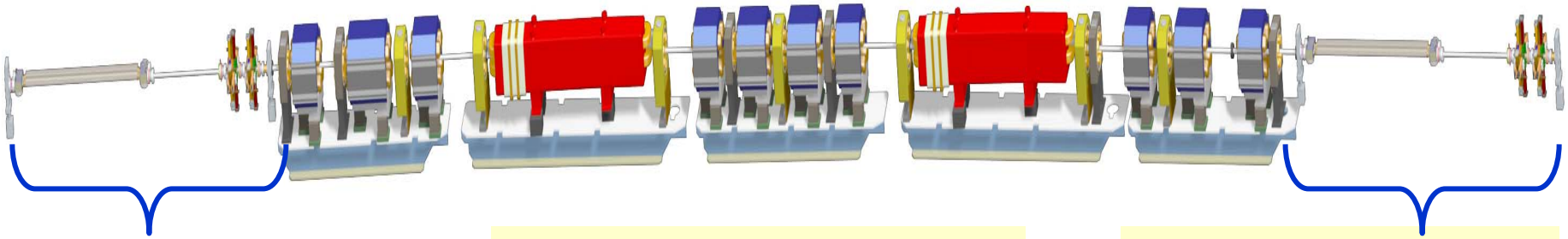

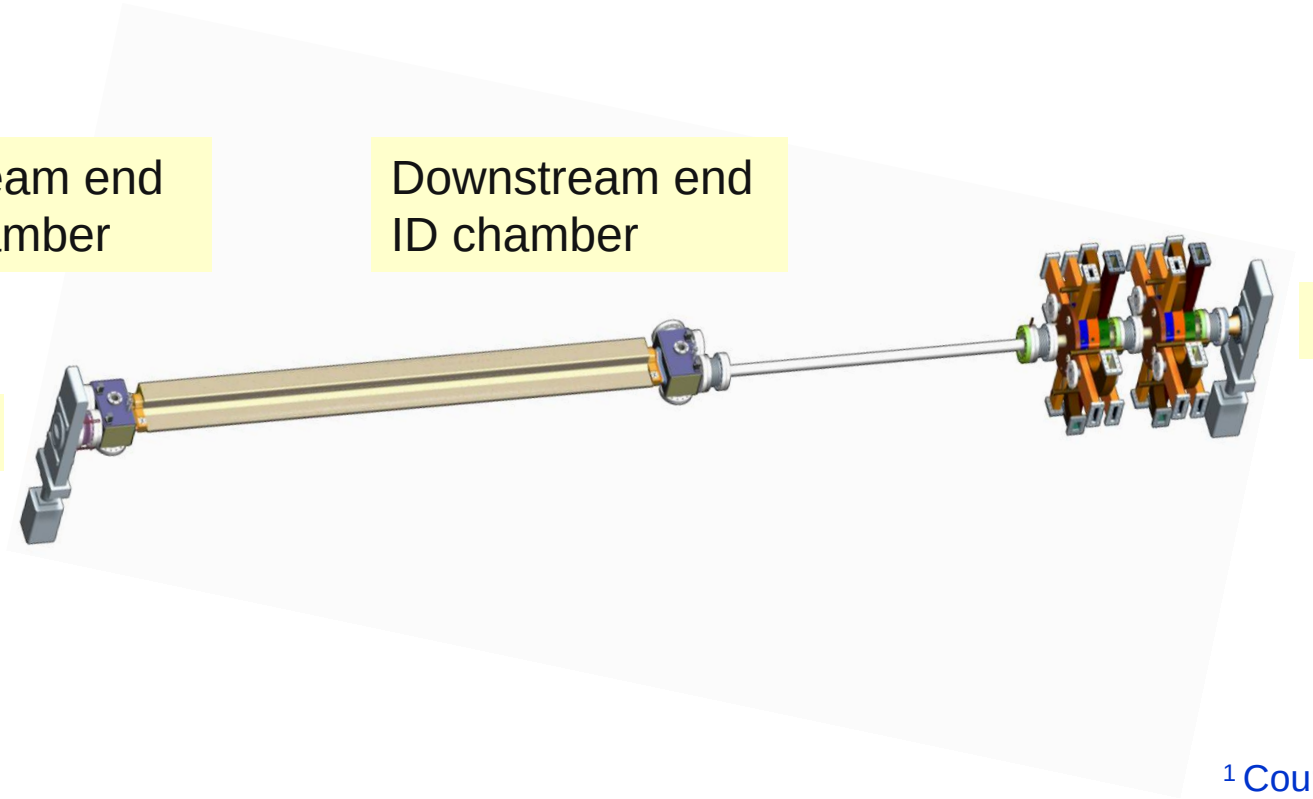

[1] Courtesy: L. Morrison

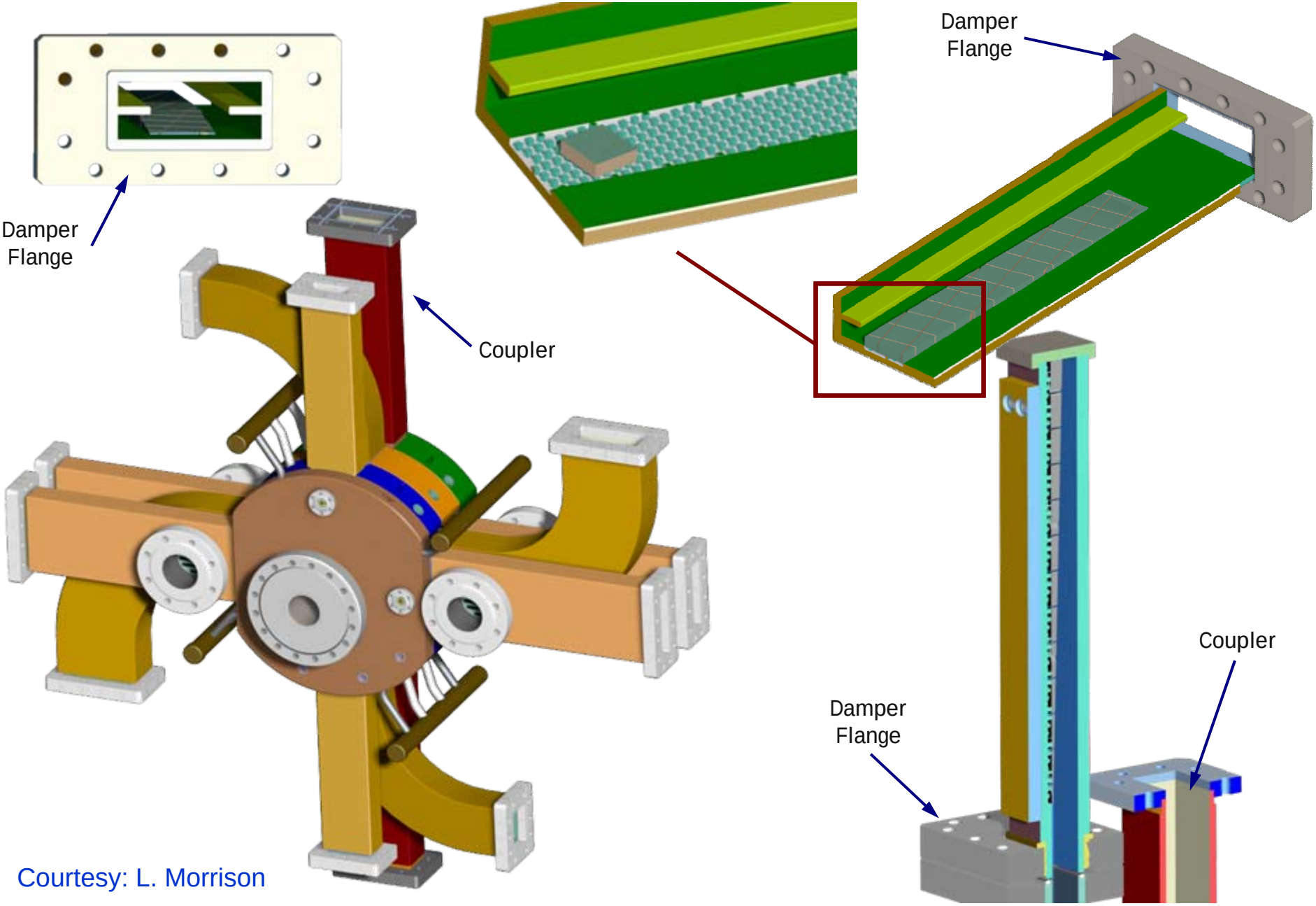

Courtesy: L. Morrison

APS operating modes, 100 mA

Singlet 24

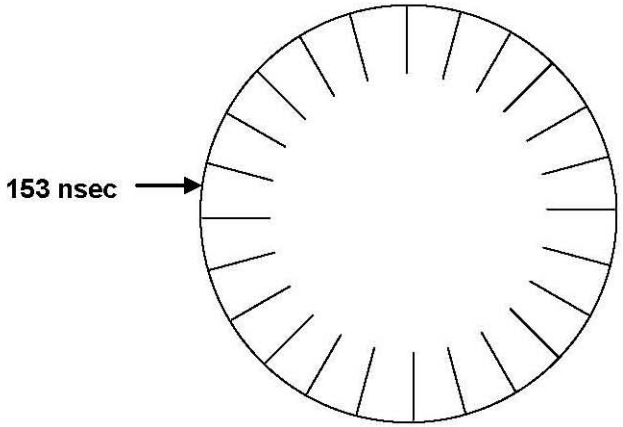

Multi bunch 324 / 1296

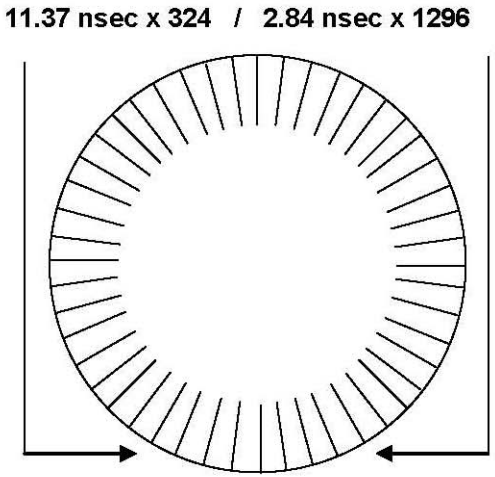

Hybrid with singlet 1 + 8*7

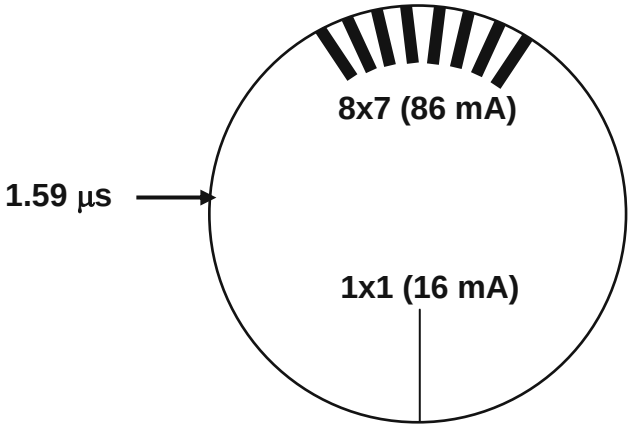

Deflecting cavity rf voltage

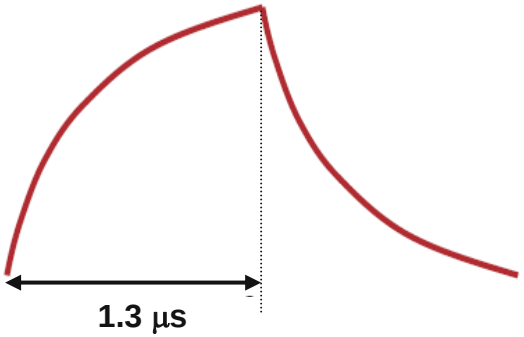

Rise/fall times limited by crab cavity fill time (~800ns)

Courtesy: J. Carwardine

Summary of ps-pulse system performance parameters

Nominal SPX RF Frequency	2815.5 MHz (8x 351.936MHz)
RF pulse length (nominal)	1.3 uS
Cavity structure type	SW, pi-mode
Cavity beam pipe radius	21 mm (no change from present)
X-ray source of deflected pulses	Sector 7 ID
Cells per cavity	3
Nominal deflecting voltage per cavity	2MV (4MV total)
Cavity layout geometry	2 cavities downstream of S6 ID 2 cavities downstream of S7 ID
Pulse repetition rate for thermal load and mechanical stress calculations	1KHz
Nominal operating pulse repetition rate	Phase 1: ≥120Hz, Phase 2: 1KHz
Single bunch threshold	~19mA (present threshold: ~20mA)
Nominal operating SR beam current ■ Design margin for calculating beam dynamics ■ Design margin for cavity thermal design	102mA 100% (equivalent to 204mA) 30% (equivalent to 132mA)

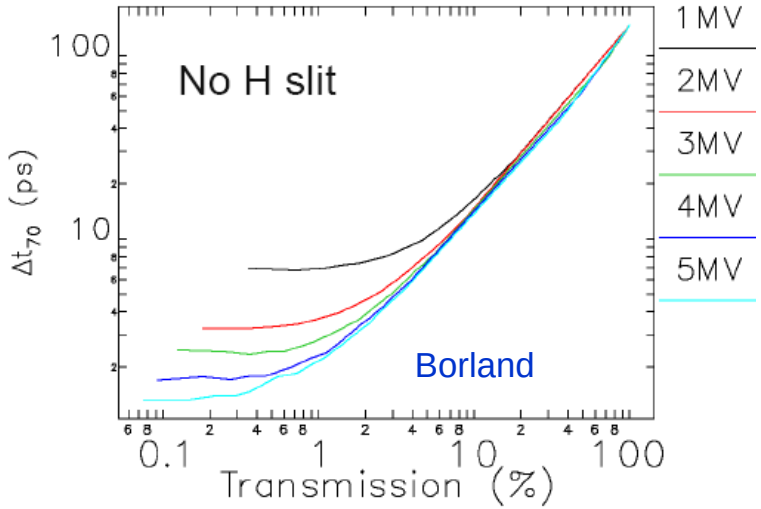

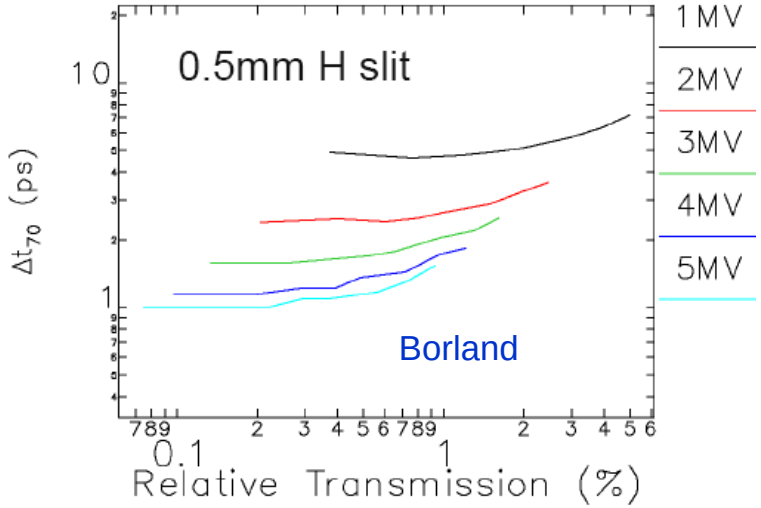

Summary of SPX goals and constraints

- Implement a ps-pulse x-ray pulse capability on a fast track and at low cost compared with the CW superconducting source.
  - X-ray pulse length below 4ps.
  - Must lead to a1kHz rep. rate for source to be scientifically useful.
  - Cavities must fit within one sector.

- Phase I - provide initial capability
  - Hybrid fill pattern only (chirp applied to 16mA bunch)
  - ‘Few’ picoseconds x-ray pulse length, 120Hz rep rate.

- Phase II
  - (a) Increase rep. rate to 1kHz (new klystron and modulator)
  - (b) Reduce x-ray pulse length to ~1ps (long ID straight)

Summary of Phase I technical design

- Emittance growth for 4 MV is acceptable[1]
  - Under 10%
- We can achieve ~2ps FWHM with ~1% of nominal intensity
- Differential phase and voltage tolerances are tight[1]
  - ±0.16 deg (120 Hz) ±0.05 deg (1 kHz)
  - ±0.29% (120 Hz) ±0.13% (1 kHz)
- Residual voltage tolerance is tight[1]
  - 26 kV (120 Hz) 13 kV (1kHz)
- New lattice for the deflecting cavities has been developed with minimal or no effect for users outside Sector 7[2].
- Stability requirements are met with 3-cell cavity design.[3]
- Growth rates due to HOM/LOM are acceptable.[3]
- 3-cell cavity is thermally stable.[4]
- We have a workable damper design.[5,6]
- Cooling system has been designed that meets 0.1C temperature stability requirement.[7]
- System modeling and analysis has started. [8]

[1] Borland, [2] Sajaev,[3] Emery,[4] Jaski,[5] Brajuskovic, [6] Waldschmidt, [7]Collins, [8] Arnold

Timeline

- We started to seriously think about short x-ray pulse generation after the 2004 Strategic Planning Workshop
  - We immediately looked into the design feasibility and performance evaluation of a CW SRF system
    - *Beam physics issues (AP, OA)*
    - *RF design (RF)*
    - *Key challenges identified*
  - Within a year we came up with a CW SRF cavity design and put together a preliminary cost estimate to launch an R&D
  - It was too costly and needed a long development time
    - *Could not do it with internal funds only*
  - To fit two cryomoules inside SR, we needed access to two long straight sections.
    - *Real-estate issues*
    - *Impact on users*

Timeline , continued

- CW SRF feasibility studies were presented at the May 6, 2006 workshop on Generating and Use of Short X-ray Pulses at APS, held at ANL.
  - “warm” system option was also discussed.
- We revisited “warm” option in July 06
- We proposed a fast track path to short x-ray pulses using room-temperature “warm” crab cavities
  - All-in –One Scheme. July 06
- Initial deflecting cavity design and beam simulations were promising
  - Based on 9-cell SW structure proposed by V. Dolgashev, SLAC
- The “room-temperature” pulsed option was an interim solution.
- We concluded(at that time) a “room temperature” copper cavity design could be implemented in a shorter timeframe at a reduced cost compared to a CW system.
- We submitted a project proposal for a “warm” option.
- A division-level Project Team was formed in August 06.

Timeline, continued

- From January 07 to August 07, accelerator team worked on the design and analysis of the “warm” deflecting cavities system
  - Beam physics issues
  - Cavity rf design
  - Thermal and stress analysis
  - Mechanical layout
  - Timing and synchronization
- Deflecting cavity design was completed in August 07.
  - Ready for engineering design
- External Advisory Review Committee in August 23, 2007.
- Engineering design work during Sept-Oct 07
- Project reevaluation in November 07
  - Estimated project cost ~ 3 times the original estimate
  - Could not be supported with internal APS funds
  - We stopped SPX activities in November 07

Advisory Committee Comment and Recommendation

- General Comment
  - We are impressed by the high quality presentations and very well prepared documents.
  - For the current design, extensive simulations have been performed including electro-magnetic fields (RF), mechanical and thermal analysis. The analyses are solid.
  - The work already performed in defining and validating suitable LLLRF and synchronization schemes show promise and are already close to the required specification.
- Specific comment
  - Mechanical device looks pretty nice
  - Physics design is well thought out
- The Committee expressed concern on a number of cavity design and beam dynamics issues.
  - HOM/LOM damping material and its frequency dependence
  - Coherent damping effectiveness
- The Committee gave us a “punch list” and recommended to be resolved before completing the final mechanical design of the cavities.
  - Reviewed and resolved

Major challenge

- Cavity design and fabrication
  - RF design
  - Minimizing beam-driven LOM/HOMs
  - Thermal management
  - Cost-effective manufacturing

- RF control, timing & synchronization
  - Maximize chirp at Sector 7.
  - Minimize (null) residual effects outside of chirped region.
  - Synchronization with beamline for pumped probe experiments

Cavity Design Evolution

June 05*

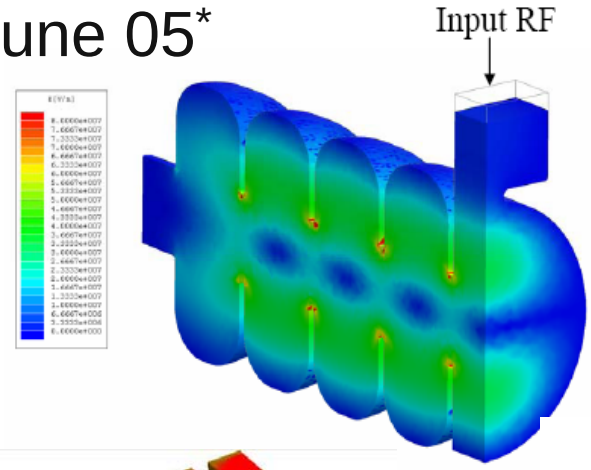

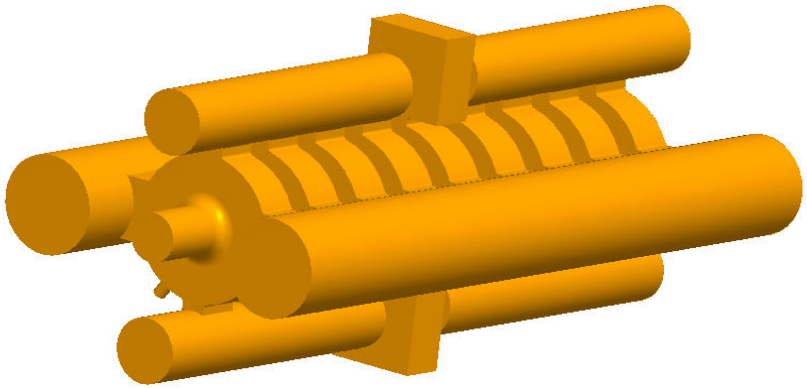

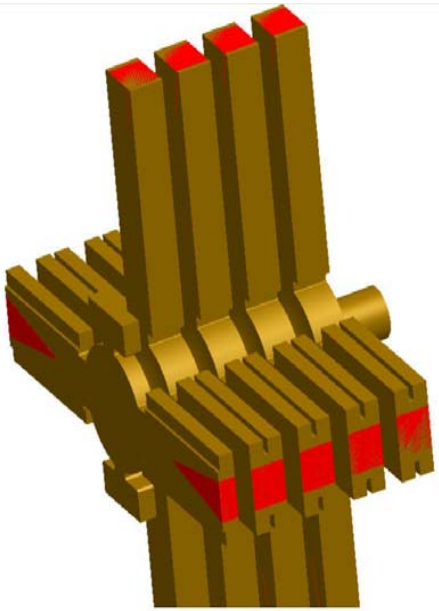

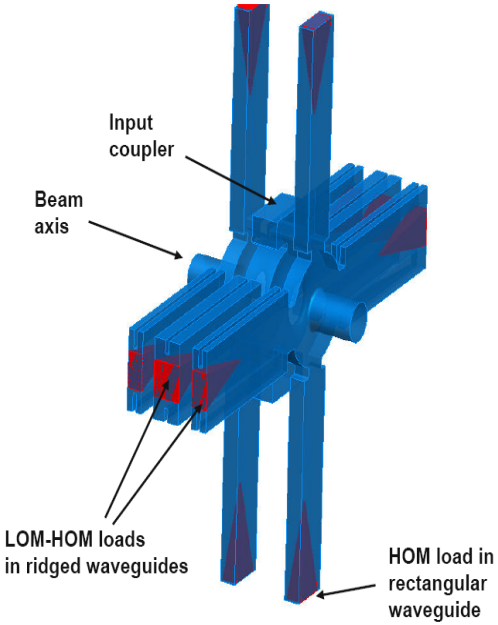

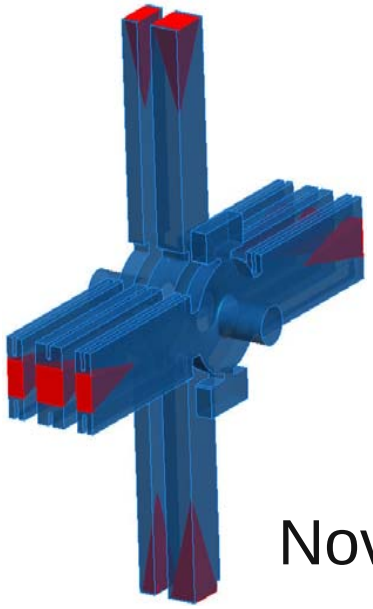

Nov 07**

* V. Dolgashev, SLAC

** V. Dolgashev, SLAC, G. Waldschmidt, A. Nassiri

SRF option

- In our opinion, it is not cost effective to spend over $6M to implement a warm-system when it is only an intermediate step.
- Exploring SRF option makes more sense and is inline with the APS strategic planning.
- SRF CW crabbing system will deliver the ultimate performance required by the APS users' community.
- CW scheme has a greater flexibility with higher photon flux and is not limited to "Hybrid Mode" only.

KEK Single-Cell 500 MHz Crab Cavity*

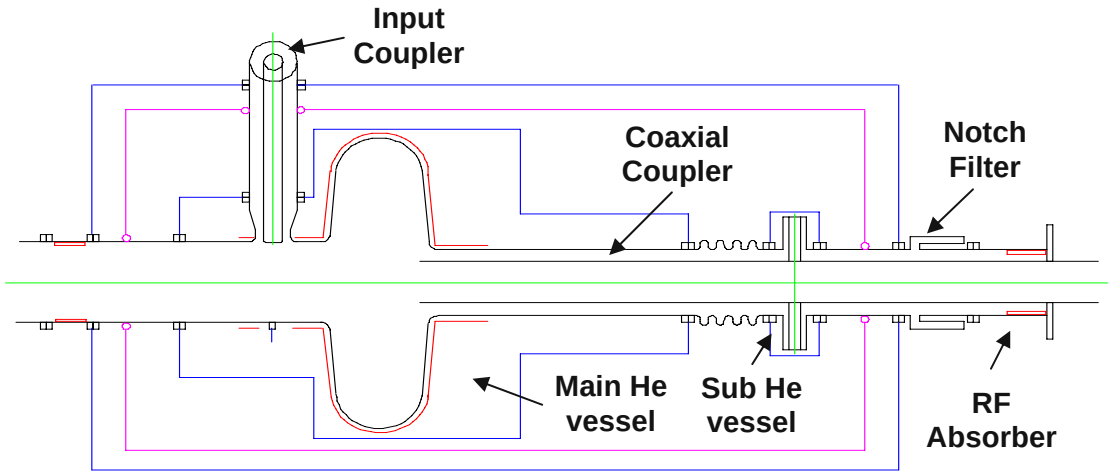

Frequency (MHz)	501.7
Deflecting Voltage	1.44 / 1.41 MV
G	220
R / Q (Ω)	46.7
Min beam radius	10.0 cm
E_{sp}/V_{defl} (1/m)	14.4
B_{sp}/V_{defl} (mT/MV)	41.5

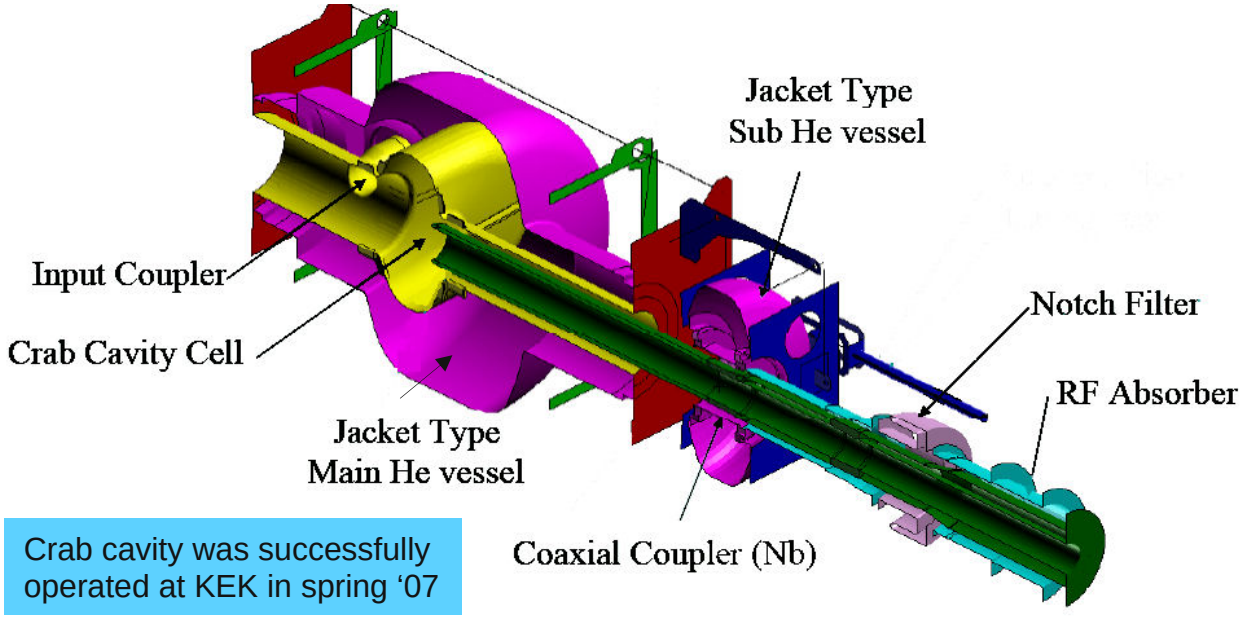

Crab cavity was successfully operated at KEK in spring '07

* K. Hosoyama, KEK

SRF Option – initial idea[1]

Frequency	2.815 GHz
Deflecting Voltage (Total Req'd)	4 MV * 2
Qo (2K)	3.84e9
G	238
R_T / Q	36.2 Ω/m
Beam radius	2.5 cm
No. Cavities	~ 20
Operation	CW
Beam Current	100 mA
B_{sp}/V_{defl}	173.4 mT/MV

Single-cell cavity parameters without dampers

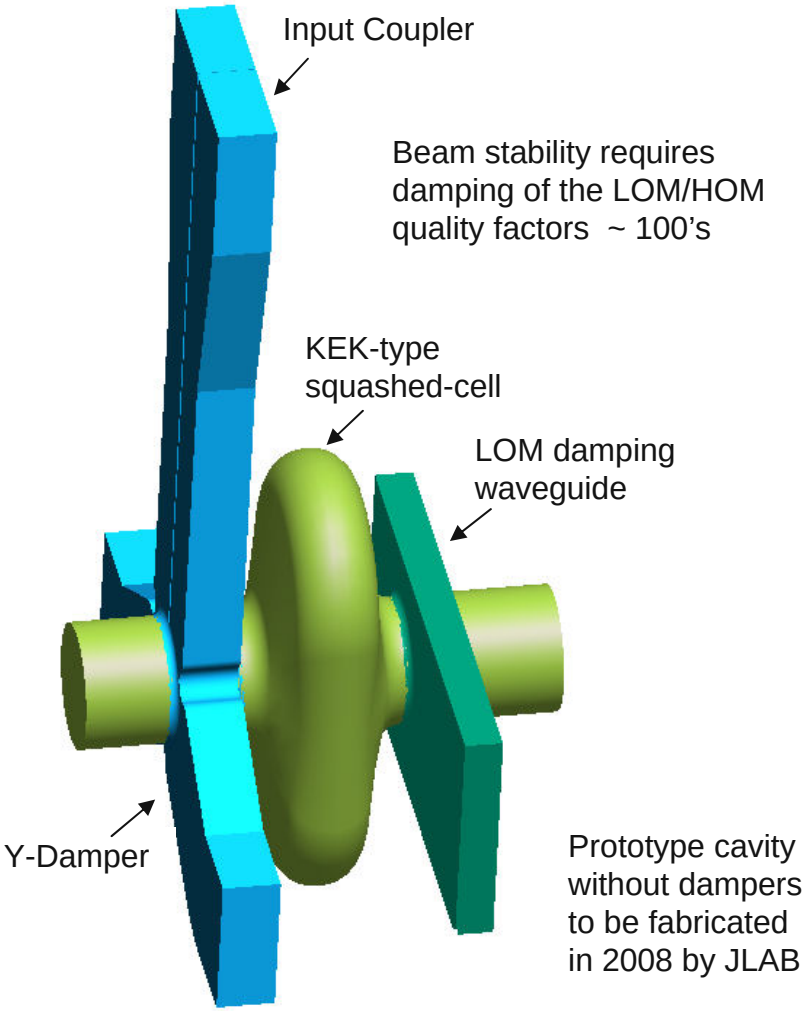

3d concept of vacuum components

[1]Nassiri, Waldschmidt, Li (LBNL)

APS 2.8 GHz Single-Cell Deflecting Cavity

Frequency (GHz)	2.815
Deflecting Voltage	4 MV * 2
Qo (2K)	$3.8 * 10^9$
G	235
R_T / Q (Ω/m)	37.2
Beam radius	2.5 cm
No. Cavities	12 * 2
Operation	CW
Beam Current (mA)	100
E_{sp}/V_{defl} (1/m)	83.5
B_{sp}/V_{defl} (mT/MV)	244.1

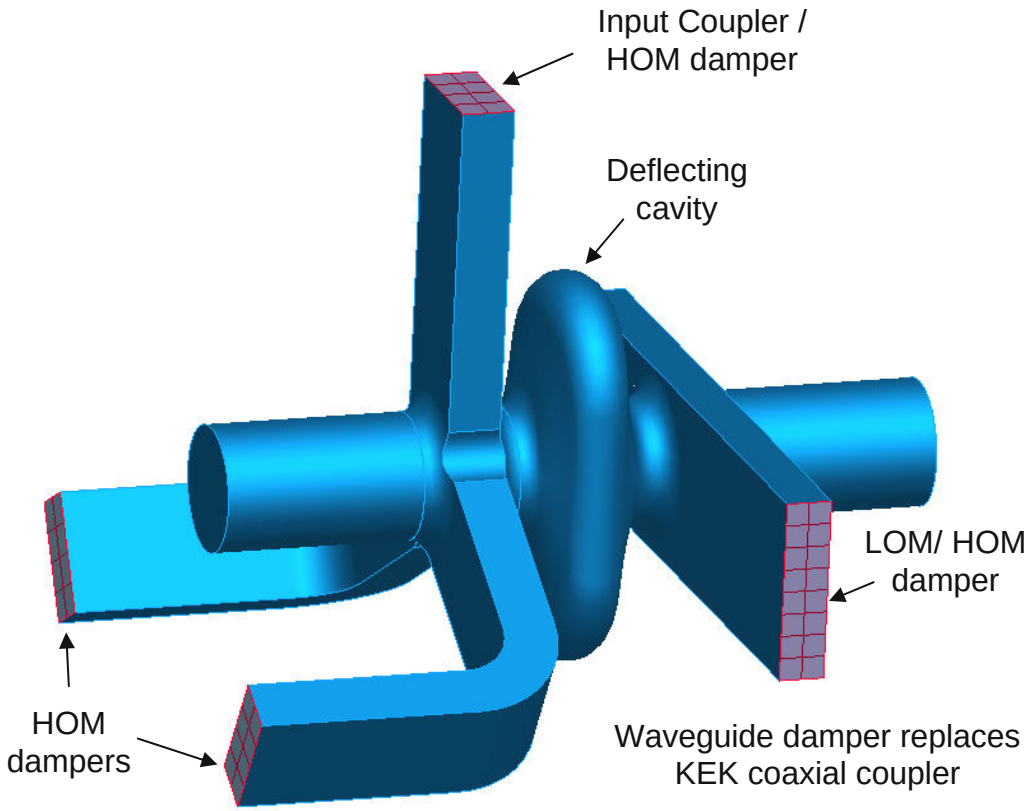

Compact single-cell cavity / damper assembly

Deflecting Cavity Longitudinal Beam Stability

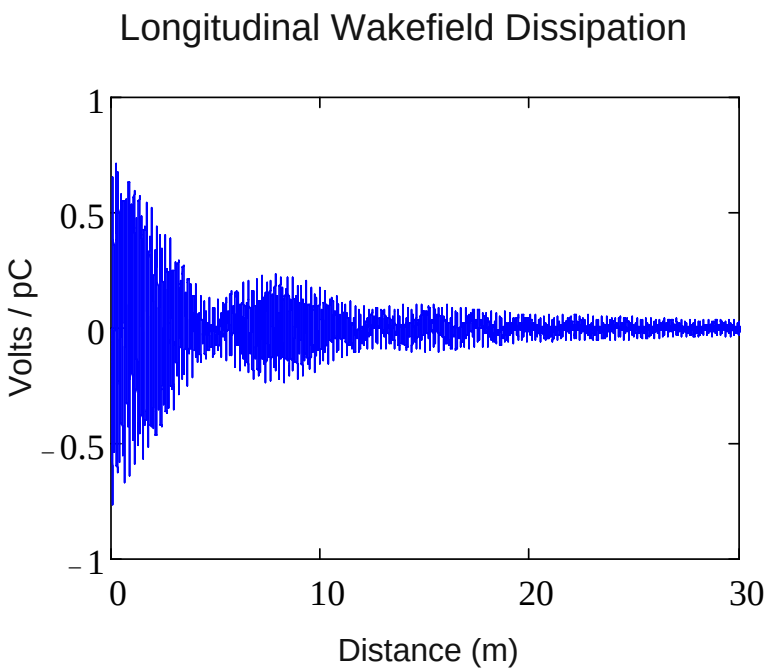

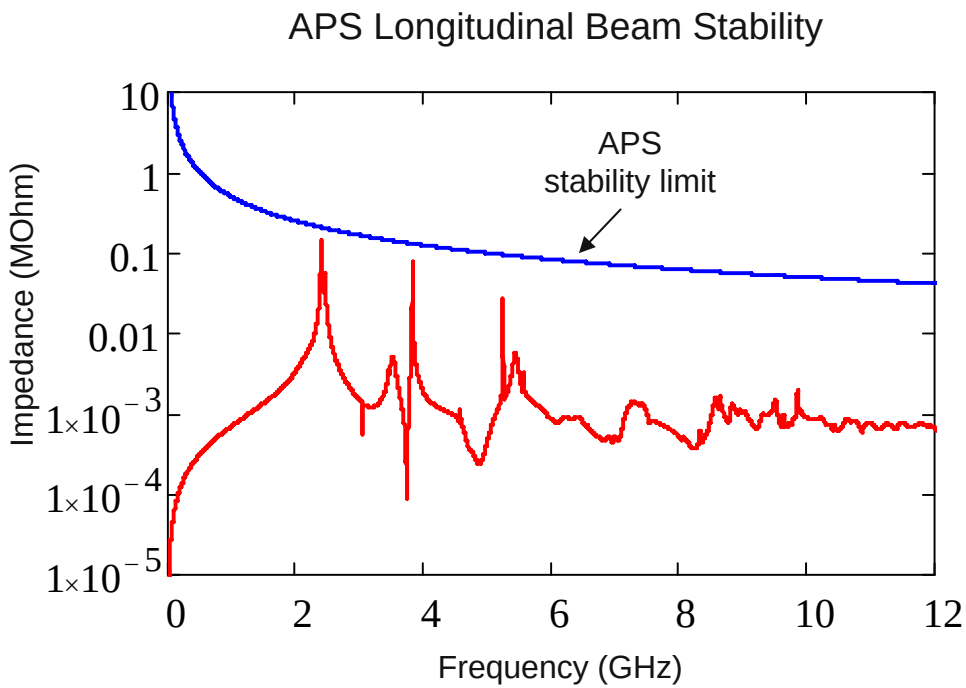

Deflecting Cavity Layout - Schematic

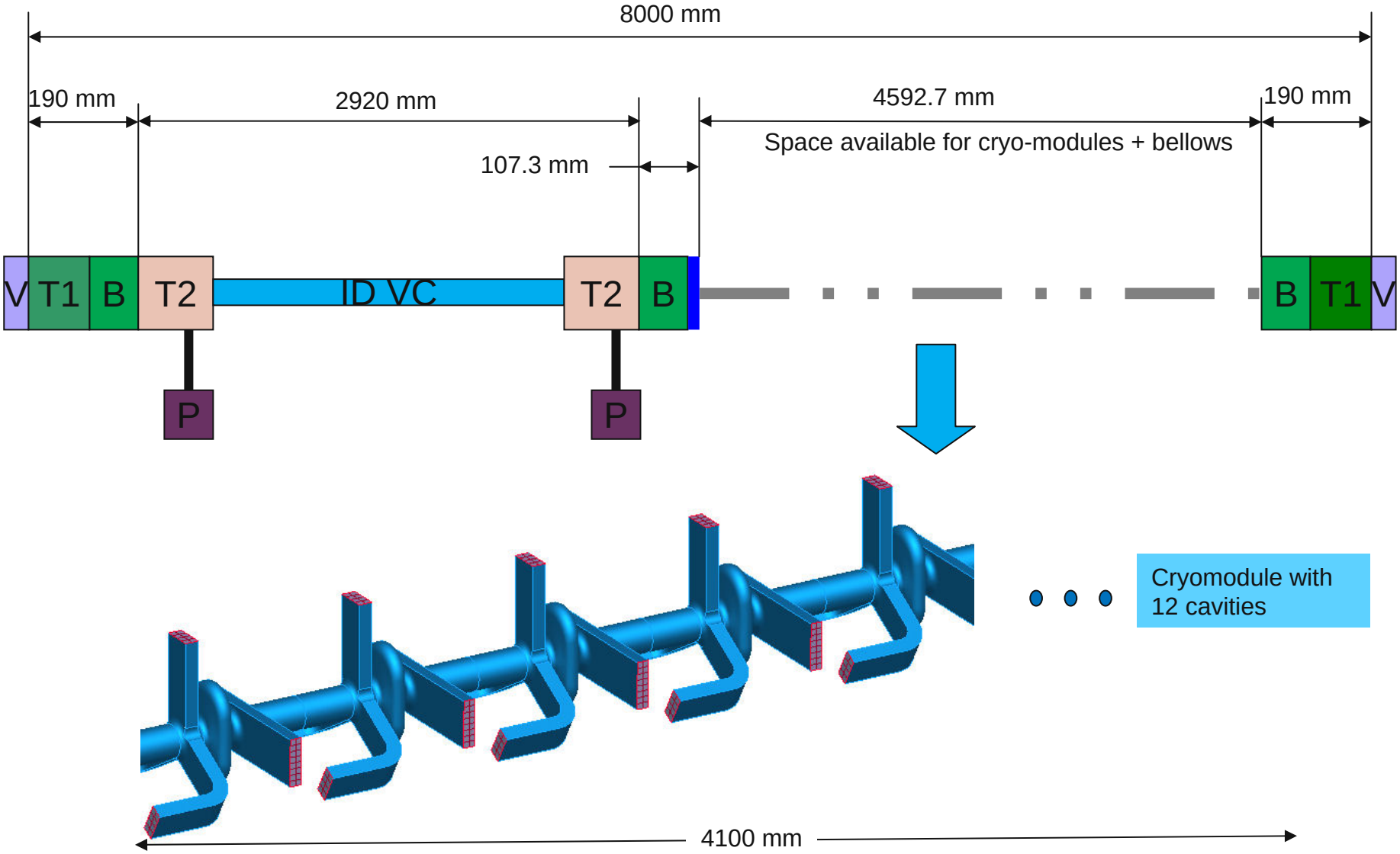

Waveguide Alternative to KEK Coaxial Coupler

- Waveguide damper is placed near cavity to intercept leakage fields of the LOM
- LOM couples to waveguide and is strongly damped Q_{ext}= 500.
- Other monopole modes also couple to TE_{10} waveguide mode and are strongly damped.

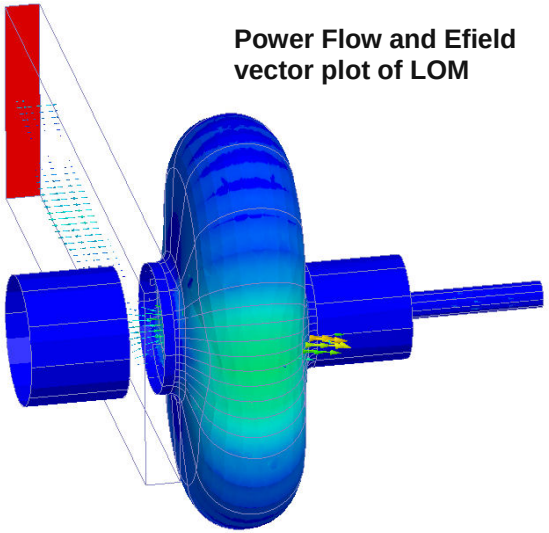

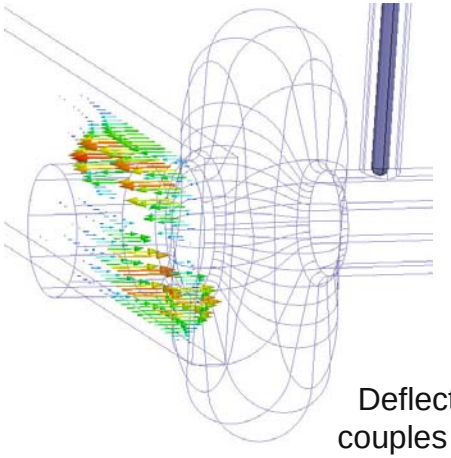

Deflecting dipole mode couples as TE_{20} wg mode

- "Degenerate" deflecting mode couples to TE_{10} waveguide mode and is strongly damped.
- Desired deflecting mode couples as TE_{20} mode and is rejected by > 30 dB in current configuration.

SRF Crab Cavity Collaboration

- We are working with JLab SRF Institute on prototyping and development of SRF deflecting cavities.
  - Fabrication of a single-cell Nb test cavity with optimized shape
  - Fabrication of a copper cavity with waveguide damping
  - Development of a multi-cell Nb cavity with WG damping
- A tri-lab/university collaboration has been setup to work on SRF deflecting cavity modeling, simulation, and analysis
  - ANL
  - JLab
  - LBNL
  - Tsinghua University, Beijing

First attempt

- Single-cell cavity
  - E-beam welding is complete
  - Frequency is quite close to the target (based on simulation)
  - Proceeding with chemistry and VTA

APS single-cell Nb Crab Cavity Prototype

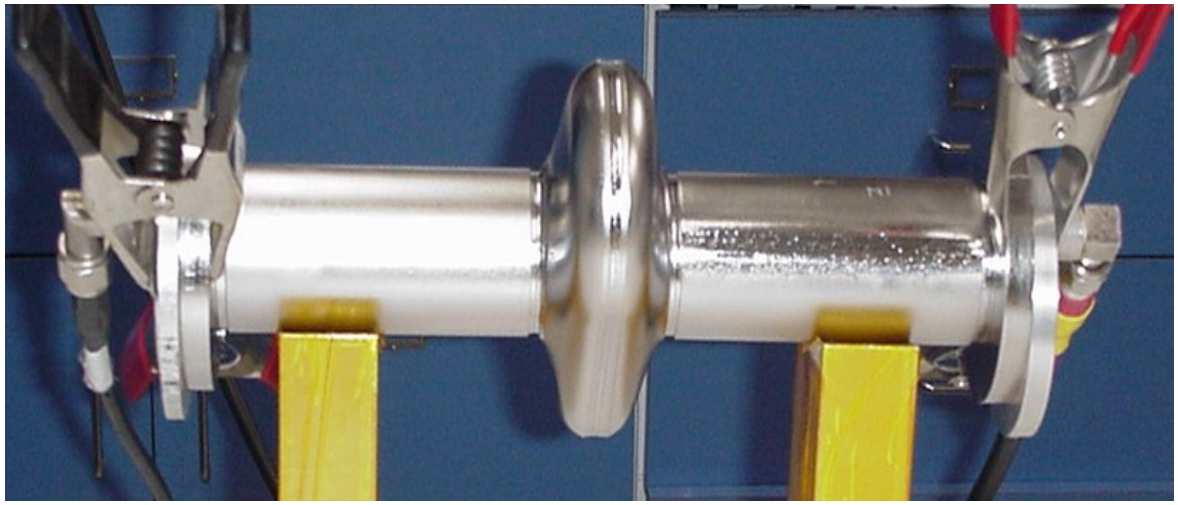

[1] P. Kneisel and B. Rimmer, JLab

Cryogenic System (Preliminary)

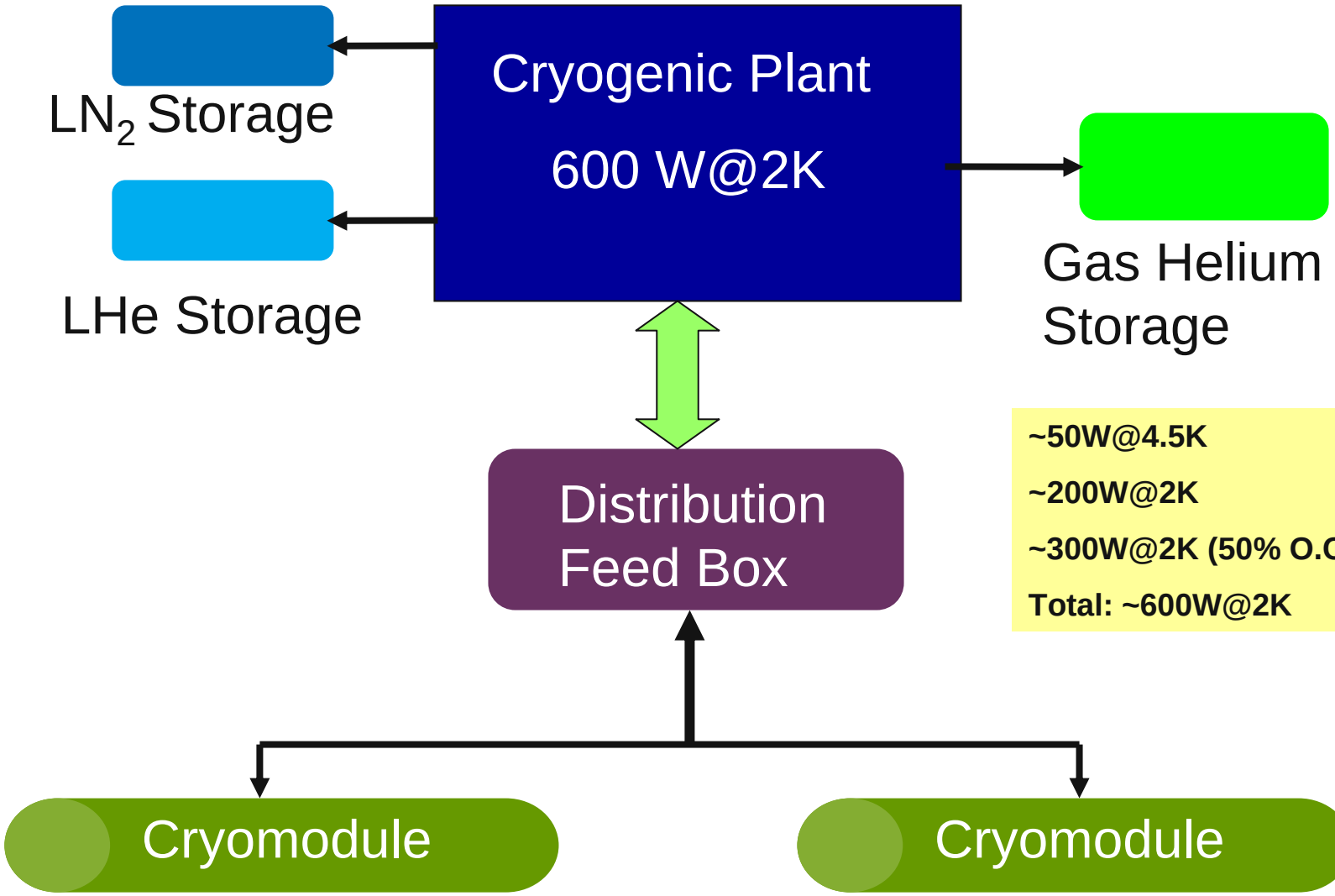

~50W@4.5K

~200W@2K

~300W@2K (50% O.C.)

Total: ~600W@2K

Closing Remarks

- We were successful in designing a room-temperature deflecting cavity system for SR-based ps-pulse applications.
- We now have in place a strong design team to tackle many challenging technical problems ahead of us.
- SRF cavity pre-conceptual design and beam dynamics analysis underway
- We will continue to work closely with short pulse x-ray science community and will seek their inputs.
- The outcome of these two workshops will be incorporated into a comprehensive proposal to DOE-BES to request funding.