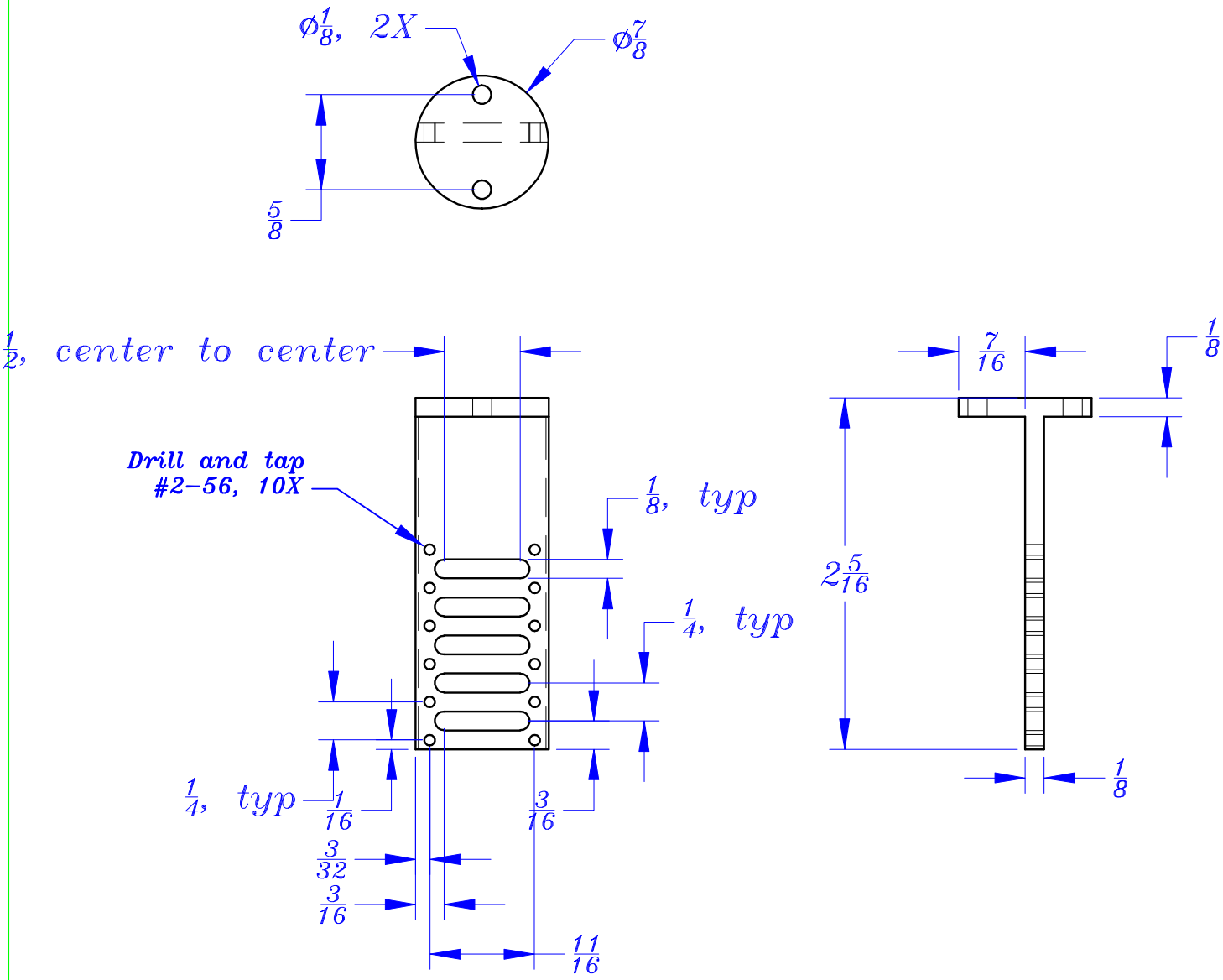

UNLESS OTHERWISE SPEC. TOLERANCES ON	DRAWN BY MICHAEL PAPE	DATE 05/25/2007	UNIVERSITY OF WASHINGTON PACIFIC NORTHWEST CONSORTIUM SEATTLE, WA 98195
DECIMALS: .X ±.100, .XX ±.010, .XXX ±.005; ANGLES ±0°30'	CHECKED BY		
DIMENSIONS ARE IN ENGLISH X METRIC [MM]	MATERIAL: Aluminum		TITLE: New Cryo Sample Holder Base
			SCALE / SIZE / DRAWING NO. Cryostat Sample Holders New.dwg

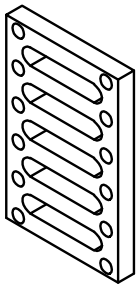

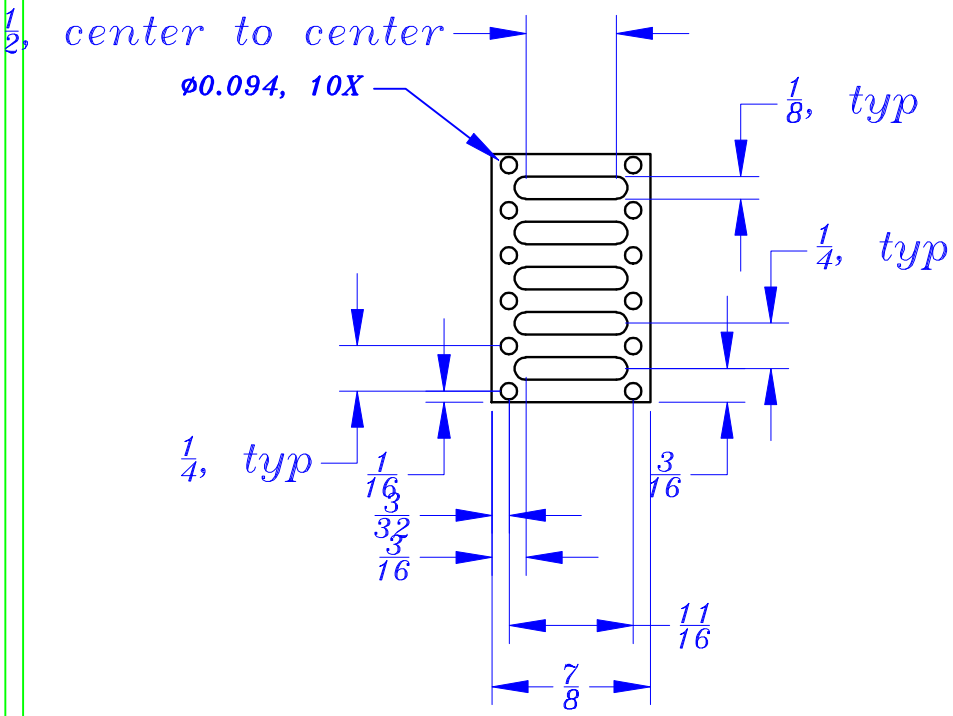

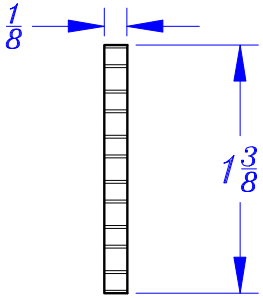

UNLESS OTHERWISE SPEC. TOLERANCES ON	DRAWN BY MICHAEL PAPE	DATE 05/25/2007	UNIVERSITY OF WASHINGTON PACIFIC NORTHWEST CONSORTIUM SEATTLE, WA 98195
DECIMALS: .X ±.100, .XX ±.010, .XXX ±.005; ANGLES ±0°30'	CHECKED BY		
DIMENSIONS ARE IN ENGLISH X METRIC [MM]	MATERIAL: Aluminum		TITLE: New Cryo Sample Holder Cover
			SCALE / SIZE / DRAWING NO.: Cryostat Sample Holders New.dwg

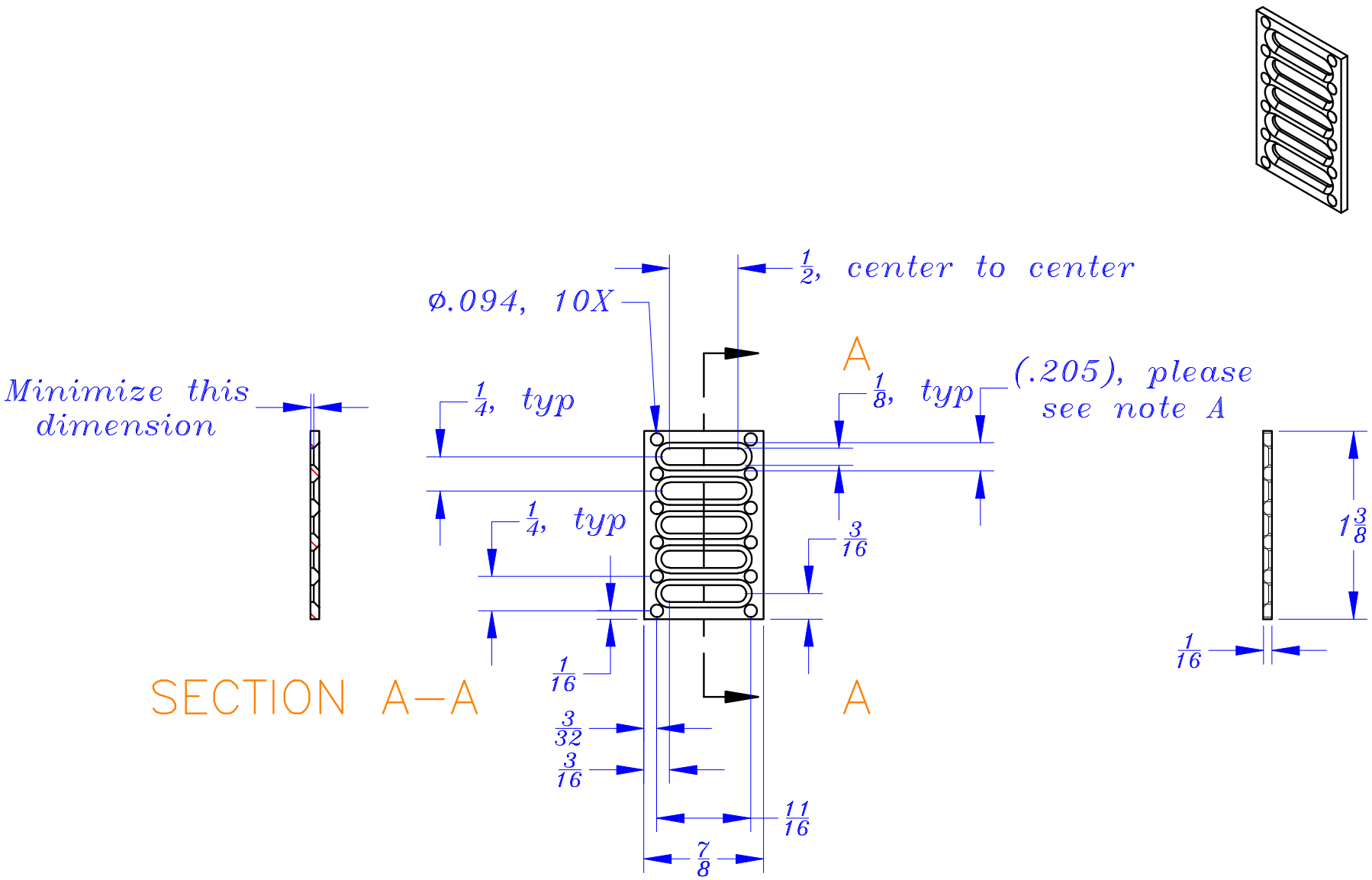

NOTE A: Please chamfer edges noted at dim (0.205) at 45°, to minimize dim in section view A–A

NOTE B: Quantity 5

UNLESS OTHERWISE SPEC. TOLERANCES ON	DRAWN BY MICHAEL PAPE	DATE 05/25/2007	UNIVERSITY OF WASHINGTON PACIFIC NORTHWEST CONSORTIUM SEATTLE, WA 98195
DECIMALS: .X ±.100, .XX ±.010, .XXX ±.005; ANGLES ±0°30'	CHECKED BY		
	MATERIAL: Aluminum		TITLE: New Cryo Sample Holder Thin Cover
DIMENSIONS ARE IN ENGLISH X METRIC [MM]			SCALE / SIZE / DRAWING NO. Cryostat Sample Holders New.dwg