Hi-TempIR Series™ Infrared Heaters

PRODUCT DATA SHEET

Models 5208, 5090, & 5075

Hi-TempIR-D-01-A

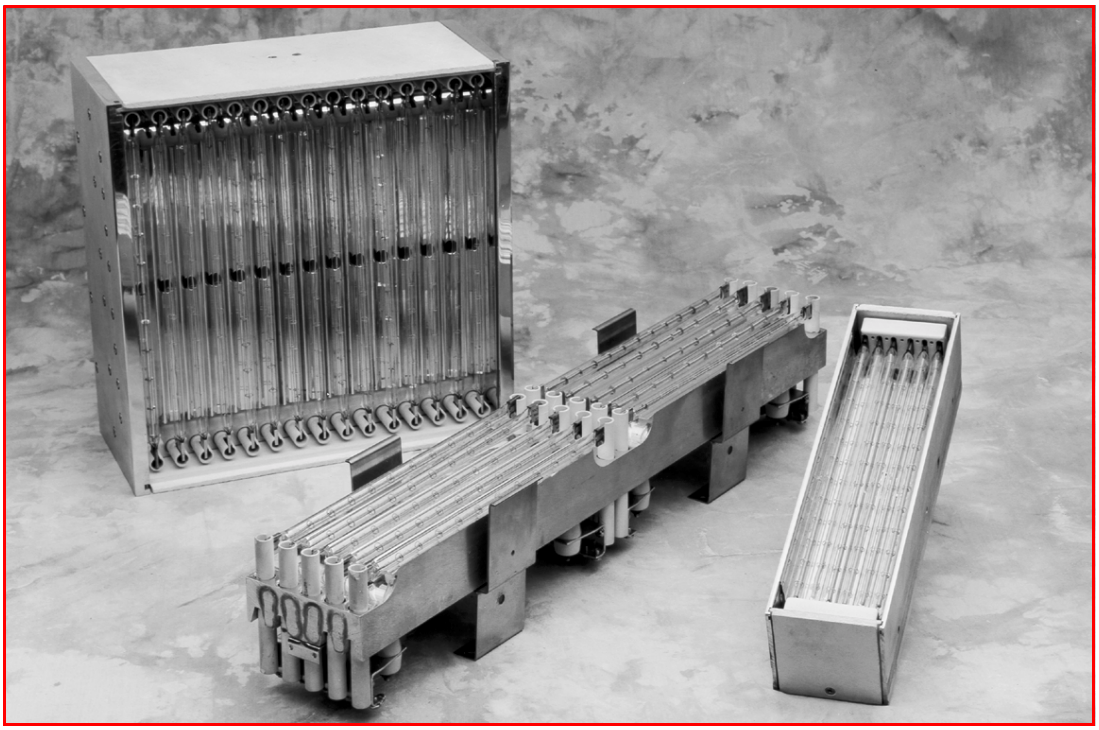

- ***High intensity, short wave, quartz lamp heat source***
- ***Fast response lamps***
  yield 90 percent output within three seconds
- ***Non-contact heat source***
  does not come in contact with the specimen being heated
- ***Localized heat***
  only on the desired area without heating the rest of the specimen
- ***Controllable energy output***
  can be adjusted to match process requirements
- ***Repeatable results***
  can be achieved for consistent process outputs
- ***Electric heat source***
  is clean and efficient
- ***Temperatures***
  up to 3090°F (1700°C) can be achieved
- ***Heat flux densities***
  up to 694 watts per square inch (108 kilowatts per square cm) in the plane that is flush with the face of the heater

RI RESEARCH INC.

ISO 9001 CERTIFIED

Research, Inc. 6425 Flying Cloud Drive, Eden Prairie, MN 55344 USA • (952) 941-3300 • Fax (952) 941-3628 • wwwirheaters.com

Application

The Hi-TempIR™ Series of electric infrared heaters from Research, Inc. are designed for applications that require very high heat flux densities in concentrated areas. The various models of this heater family can be used in many different manufacturing, laboratory, and test facility applications including:

- Aerodynamic heating simulation
- Thermal Stress testing
- Heating tensile and fatigue test specimens
- Semiconductor wafer processing
- Chemical processing
- Stress relieving
- Metal brazing processes

Features and Benefits

The Hi-TempIR Series of electric infrared radiant heaters supply a variety of features and related benefits:

Continuous Operation - The design and construction of the heaters, combined with forced air and water cooling, allows all the models within the Hi-TempIR Series to withstand continuous high temperature operation.

Rapid Response - The Hi-TempIR Series heaters use tubular quartz, 'T3-style,' halogen cycle lamps as radiant energy emitters. These lamps heat up and cool down instantly in response to changes in power control signals. They reach 90% of full operating temperature within three seconds of a cold start. The radiant energy dissipates to 10% within five seconds after power is removed.

Modular Design - Each of the models of the Hi-TempIR Series are modular in design allowing for multiple units to be installed in many different configurations to create heating arrays of nearly any size and shape.

Controllable Energy Output - The infrared energy emitted from any of the Hi-TempIR models can be adjusted to match the heating requirements of many different applications. Research, Inc. manufactures a complete line of SCR power control instrumentation that provides precise power control to these heaters.

Heater Description – Model 5208

The Model 5208 directs high density infrared energy onto localized areas. The basic heater includes the following major components:

Heater Module - The heater consists of a specular aluminum reflector that directs the infrared energy generated by 'T3-style,' halogen lamps installed in the heater. The heater is available in three heated lengths and includes the following components:

Figure 1: Model 5208 Hi-TempIR Infrared Heater

Enclosed Case - The entire heater is enclosed in an electrically safe housing.

Water Cooling - Connections to supply required cooling water to the heater are provided.

Air Cooling - Ports to connect required cooling air to the heater are provided.

Quartz Window - A quartz window is provided on the front of the heater.

Mounting - Drilled and tapped holes are provided for mounting the Model 5208.

Technical Information – Model 5208

Product Temperatures - Maximum product temperature depends upon the lamp filament temperature, the product's radiant energy absorptivity, and heat losses from the product. Although the highest attainable product temperature is undetermined, 3300°F (1816°C) has been achieved on 0.02 inch (0.5 mm) thick titanium sheet.

Figure 2 illustrates the time to temperature using a Model 5208-10 to heat 0.5 inch (13 mm) and 0.05 inch (1.3 mm) thick stainless steel specimens with surfaces blackened to increase absorption. Curves P, Q, R and S show the heating rates for the 0.5 inch (13 mm) thick specimen with rated and double the rated voltage applied to the heater. Curve T shows the heating rate for the 0.05 inch (1.3 mm) thick specimen with double the rated voltage applied to the heater.

Product Sizes - Products up to 3 by 16 inches (76 by 406 mm) can be heated with a single heater. Larger heated areas can be created by mounting two or more heaters together.

Heat Flux Density - Heat flux densities up to 694 watts per square inch (108 watts per square cm) can be achieved at the target plane.

Heater Module - The reflector is constructed of aluminum polished to a specular finish. The heater

module is available in a 3 inch (76 mm) heated width and 5, 10 and 16 inch (127, 254 and 406 mm) heated lengths. The heated length is specified at the time the heater is ordered.

Lamps - All heaters use high intensity, short wave, 'T3-style,' tubular quartz infrared lamps to produce the infrared heat. The tungsten emitter in the lamps has an operating temperature of as much as 5400°F (2982°C) at rated voltage. The spectral energy peak is 0.89 microns at this temperature. Other lamps are available which generate lower temperatures and lower energy wavelengths. The lamps are ordered separately from the heater.

Enclosed Case - The case enclosing the heater covers all electrical and thermally-hot components. The case is designed so that consumable components (e.g., the quartz window and lamps) can be easily installed or serviced.

Water Cooling - Clean cooling water at the flow rates listed in Specifications is required to cool the reflector body when operating the heater. Two 1/4-18 NPT water inlet ports are provided on the top side of the heater. Inlet water temperature should not exceed 70°F (22°C) above ambient dew point and inlet water pressure should not exceed 200 pounds per square inch (14.1 kilograms per square centimeter).

Air Cooling - Clean, oil-free shop air at the flow rates listed in Specifications is required to cool the quartz window, lamp end seals, and lamp envelopes when operating the heater. Inlet air temperature should not exceed 100°F (38°C). A 3/8-18 NPT air inlet port is provided on the top side of the heater. A 5/16-32NF pressure port is also provided for air pressure measurement within the heater.

Quartz Window - The quartz window covers the emitter opening of the heater. In addition to protecting the reflector from contaminants, it also prevents the target product from being cooled by the cooling air supplied to the heater. A quartz window is shipped with each Model 5208.

Mounting - Eight 10-32NF threaded holes are provided on the sides and top of the heater for mounting. The air and water connection fittings on the heater may also be used to support it in special installations. The heater should be mounted so that the end covers can be easily removed for service. Clearance must also be maintained for hot exhaust air exiting the slots on the top of the unit.

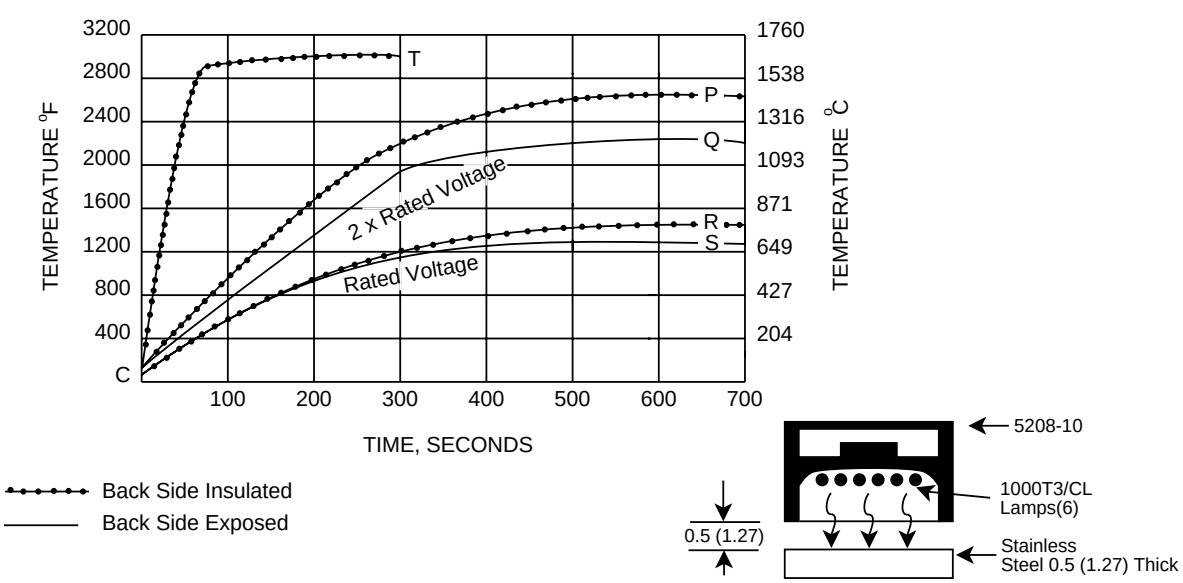

Model 5208-10, stainless steel specimen with blackened surfaces
Curves P, Q, R, and S: 0.5 inch (13 mm) thick specmen
Curve T: 0.05 inch (1.5 mm) thick specimen
All dimensions in inches (mm)

Figure 2: Model 5208 Example Heating Rates

Specifications – Model 5208

Specification	5208-05		5208-10			5208-16
Weight, Pounds (kg)	8 (3.6)		12 (5.4)			17 (7.7)
Lamp Type	500T3 /CL/HT	1200T3 /CL/HT(1)	1000T3 /CL/HT(1)	2000T3 /1CL/HT(1)	Q6M/T3 /CL/HT(1)	3200T3 /CL/HT(1)
Lighted Length	5.00 (127)	6.00 (152)	10.00 (254)	9.75 (248)	9.75 (248)	15.75 (400)
Rated Voltage	120	144	240	240	480	384
Total Power Dissipated at Rated Voltage, kW	3.0	7.2	6.0	12.0	36.0	19.2
Cooling Water Flow, GPM (Liters per Minute)	0.09 (0.34)	0.22 (0.83)	0.18 (0.68)	0.36 (3.8)	1.1 (1.4)	0.58 (2.20)
Cooling Air Flow, CFM (M^3/Minute)	11 (0.31)	26 (0.74)	22 (0.62)	44 (1.25)	130 (3.68)	70 (1.98)

(1) Horizontal operation recommended for this lamp.

Ordering Information – Model 5208

Model	Product Description
5208	High Density Infrared Heater
Code	**Length**
05	5 Inches (127 mm)
10	10 Inches (254 mm)
16	16 Inches (406 mm)

Ordering Example – Model 5208

	Model	Length
Typical Model Number	5208	10

Accessories, Spare & Replacement Parts – Model 5208

Model	Description
	Quartz Window for:
W-5208-05	6 Inch (152 mm) length
W-5208-10	10 Inch (254 mm) length
W-5208-16	16 Inch (406 mm) length

Lamps – Model 5208

Model	Heater Length	Watts	Lamp Description
057541-001	5 Inches (127 mm)	500	500T3/CL
094312-002	5 Inches (127 mm)	500	500T3/CL(2)
057544-003	5 Inches (127 mm)	1200	1200T3/CL/HT
057541-002	10 Inches (254 mm)	1000	1000T3/CL(1)
057544-006	10 Inches (254 mm)	2000	2000T3/1CL/HT(1)
057549-005	10 Inches (254 mm)	2000	2000T3/1CL/HT/VB
057541-010	10 Inches (254 mm)	6000	6000T3/CL(1)
057550-010	10 Inches (254 mm)	6000	Q6MT3/CL/HT(1)
057541-009	16 Inches (406 mm)	3200	3200T3/CL(1)

(1) Horizontal operation recommended for this lamp.
(2) HeLeN–coated, glare reduction lamp.

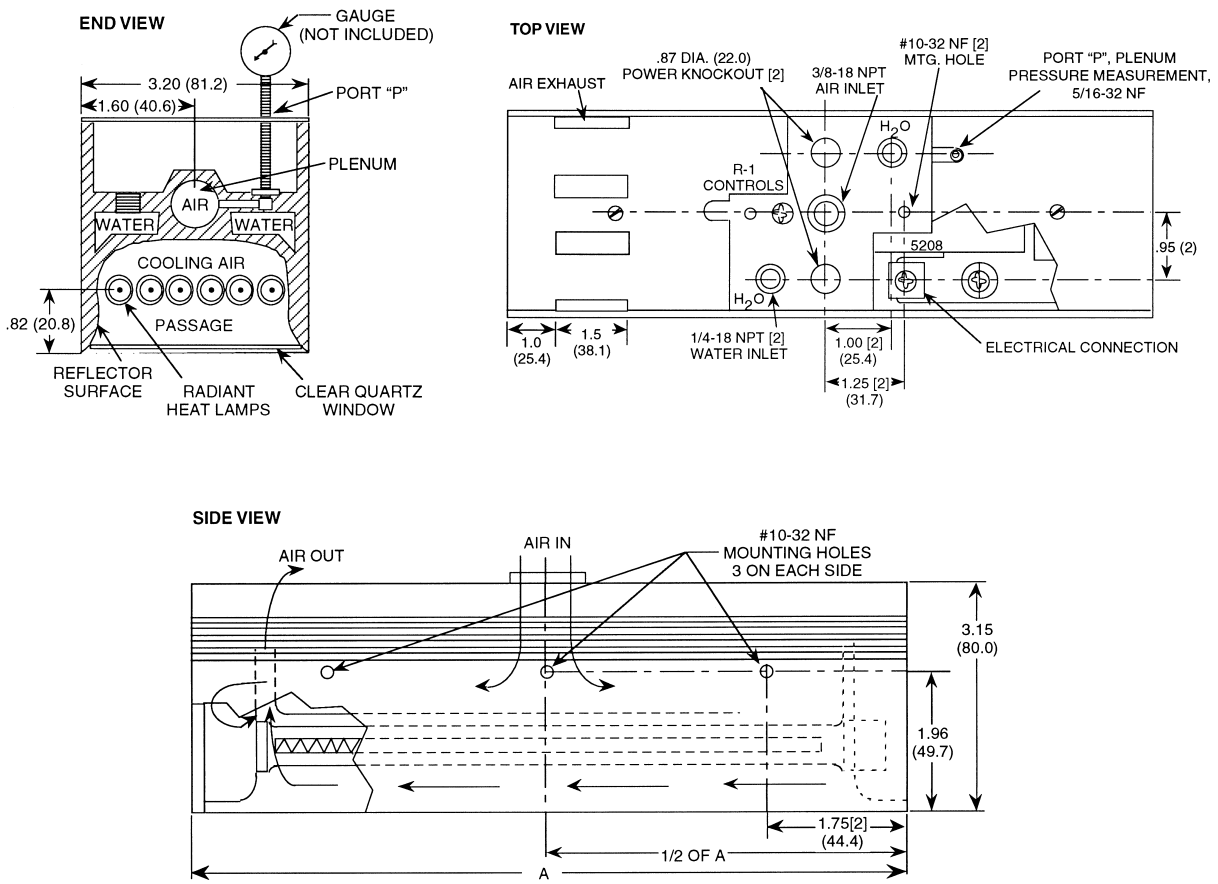

Dimension	5208-05	5208-10	5208-16
Overall Length A	9.50 (241)	12.63 (321)	18.63 (473)
Lighted Length	5-6 (127-152)	9.75-10 (248-254)	15.75 (400)

All dimensions in inches (mm)

Figure 3: Model 5208 Dimensions

Heater Description – Model 5090

The Model 5090 directs high density infrared energy, generated by 'T3-style,' halogen lamps onto localized areas. The basic heater includes the following major elements:

Heater Module - The heater consists of a specular aluminum reflector that directs the infrared energy supplied by the lamps. It is available in 17 configurations with single or multiple sections to accommodate a variety of different heating requirements.

Water Cooling - Connections to supply required cooling water to the heater are provided.

Mounting - Tapped holes are provided for mounting the heater.

Technical Information – Model 5090

Product Temperatures - Maximum product temperature depends upon the lamp filament temperature, the target product's radiant energy absorptivity, and heat losses from the product. With proper conditions, temperatures as high as 2000°F (1093°C) and heating rates of several hundred degrees per minute can be achieved.

Product Sizes - Depending on the model, a single-section heating component can heat an area up to 4 by 16 inches (102 by 406 mm). Larger heated areas of virtually any shape and size can be created by mounting two or more single- or multi-section heating components side-by-side or end-to-end.

Heat Flux Density - Dissipated heat flux densities up to 442 watts per square inch (68.5 watts per square cm) can be achieved.

Heater Module - The Model 5090 contains a reflector constructed of aluminum polished to a specular finish. It is available in 6, 10, and 16 inch (152, 254, and 406mm) lighted lengths. Each lighted length is available as a single-section heating component or as multiple heating components attached end-to-end on a single reflector extrusion. The 6 inch (152 mm) lighted length can be provided with one to eight sections, the 10 inch (254 mm) lighted length can be provided with one to six sections, and the 16 inch (406 mm) lighted length can be provided with one to three sections. The number of sections required is specified within the Model 5090 model number.

When ordered with multiple sections, the 6 inch (152 mm) models have 3.4 inches (86 mm) of space between each section that is not lighted. The 10 inch (254 mm) models have 2.4 inches (61 mm) of unlighted space between multiple sections. The 16 inch (406 mm) models have 4.3 inches (109mm) of unlighted space between multiple sections. These unlighted spaces will exist if two or more heating components are mounted end-to-end, regardless of whether they are single- or multi-section heaters.

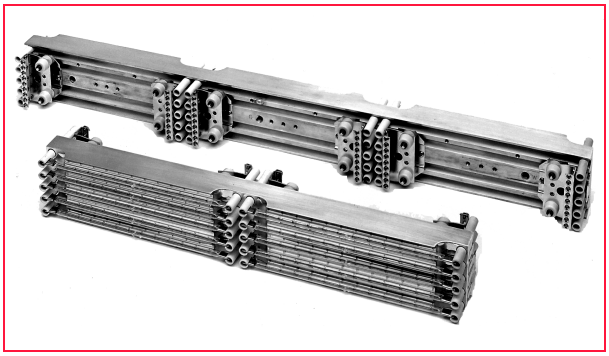

Figure 4: Model 5090 Hi-TempIR Infrared Heater

The side-by-side lamp spacing is 0.8 inch (20 mm). This spacing can be maintained if two or more heaters are mounted side-by-side, regardless of whether they are single- or multi-section heaters.

Lamps - All heating components use high intensity, short wave, 'T3-style,' halogen infrared lamps to produce the infrared energy. The tungsten emitter in the lamps has an operating temperature of as much as the rated voltage. The spectral energy peaks for these two voltages at 1.15 and 0.89 microns.

Each Model 5090 is designed to operate with five lamps per section. The lamps are ordered separately from the heater.

Water Cooling - Clean cooling water at the flow rates listed in Specifications is required to cool the reflector body when operating the Model 5090. Inlet water temperature should not exceed 72°F (22°C). Two 1/4-18 NPT water inlet and outlet ports are provided for cooling water connection.

Air Cooling - During installation, a plenum pressurized to at least 0.125 inch (3.2 mm) water column should be positioned on the back of the Model 5090 to provide cooling for the lamp end seals and act as a protective cover over the electrical connections. The low pressure in the plenum forces cooling air through the 0.5 inch (12.7 mm) diameter ceramic lamp support tubes to cool the lamp end seals.

Mounting - Three 1/4-20NC tapped holes 0.5 inch (12.7 mm) deep to attach the heater are provided per each heating section to a support structure. The lamps can be replaced with front and back access only so spacing is not required between adjacent units.

Specifications – Model 5090

Model Number	Number of Sections	Number of Lamps	Lamp Description	Lamp Rated Voltage	Total Power kW at Rated Voltage	Cooling Water GPM (LPM)	Weight with Lamps LB (kg)
5090-06-01	1	5	1200T3/CL/HT	144	6	0.2 (0.76)	7.2 (3.3)
5090-06-02	2	10			12	0.4 (1.5)	14.4 (6.5)
5090-06-03	3	15			18	0.6 (2.3)	21.6 (9.8)
5090-06-04	4	20			24	0.8 (3.0)	28.8 (13.1)
5090-06-05	5	25			30	1.0 (3.8)	36.0 (16.3)
5090-06-06	6	30			36	1.2 (4.5)	43.2 (19.6)
5090-06-07	7	35			42	1.4 (5.3)	50.4 (22.9)
5090-06-08	8	40			48	1.8 (6.8)	57.6 (26.1)
5090-10-01	1	5	1000T3/CL/HT	240	5	0.4 (1.5)	9.0 (4.1)
			2000T3/1CL/HT		10		
			Q6MT3/CL/HT	480	30		
5090-10-02	2	10	1000T3/CL/HT	240	10	0.9 (3.4)	18.0 (8.2)
			2000T3/1CL/HT		20		
			Q6MT3/CL/HT	480	60		
5090-10-03	3	15	1000T3/CL/HT	240	15	1.3 (4.9)	27.0 (12.3)
			2000T3/1CL/HT		30		
			Q6MT3/CL/HT	480	90		
5090-10-04	4	20	1000T3/CL/HT	240	20	1.8 (6.8)	36.0 (16.4)
			2000T3/1CL/HT		40		
			Q6MT3/CL/HT	480	120		
5090-10-05	5	25	1000T3/CL/HT	240	25	2.2 (8.3)	45.0 (20.5)
			2000T3/1CL/HT		50		
			Q6MT3/CL/HT	480	150		
5090-10-06	6	30	1000T3/CL/HT	240	30	2.7 (10.2)	54.0 (24.5)
			2000T3/1CL/HT		60		
			Q6MT3/CL/HT	480	180		
5090-16-01	1	5	3200T3/CL	384	16	0.8 (3.0)	14.7 (6.7)
5090-16-02	2	10			32	1.6 (6.0)	29.4 (13.4)
5090-16-03	3	15			48	2.4 (9.1)	44.1 (20.0)

Ordering Information – Model 5090

Model	Product Description
5090	High Density Infrared Heater
Code	**Length**
06	6 Inches (152 mm)
10(1)	10 Inches (254 mm)
16(2)	16 Inches (406 mm)
Code	**Heating Sections**
01	One Section
02	Two Sections
03	Three Sections
04	Four Sections
05	Five Sections
06	Six Sections
07	Seven Sections
08	Eight Sections
Code	**Additional Options**
00	None

(1) Not available with seven or eight heating sections.
(2) Only available with one, two or three heating sections.

Ordering Example – Model 5090

	Model	Length	Heating Sections	Additional Options
Typical Model Number	5090	10	03	00

Lamps – Model 5090

Model	Heater Section Length	Watts	Lamp Description
057544-003	6 Inches (152 mm)	1200	1200T3/CL/HT
057541-002	10 Inches (254 mm)	1000	1000/T3/CL(1)
057544-006	10 Inches (254 mm)	2000	2000T3/1CL/HT(1)
057550-010	10 Inches (254 mm)	6000	Q6MT3/CL/HT(1)
057541-009	16 Inches (406 mm)	3200	3200T3/CL(1)

(1) Horizontal operation recommended for this lamp.

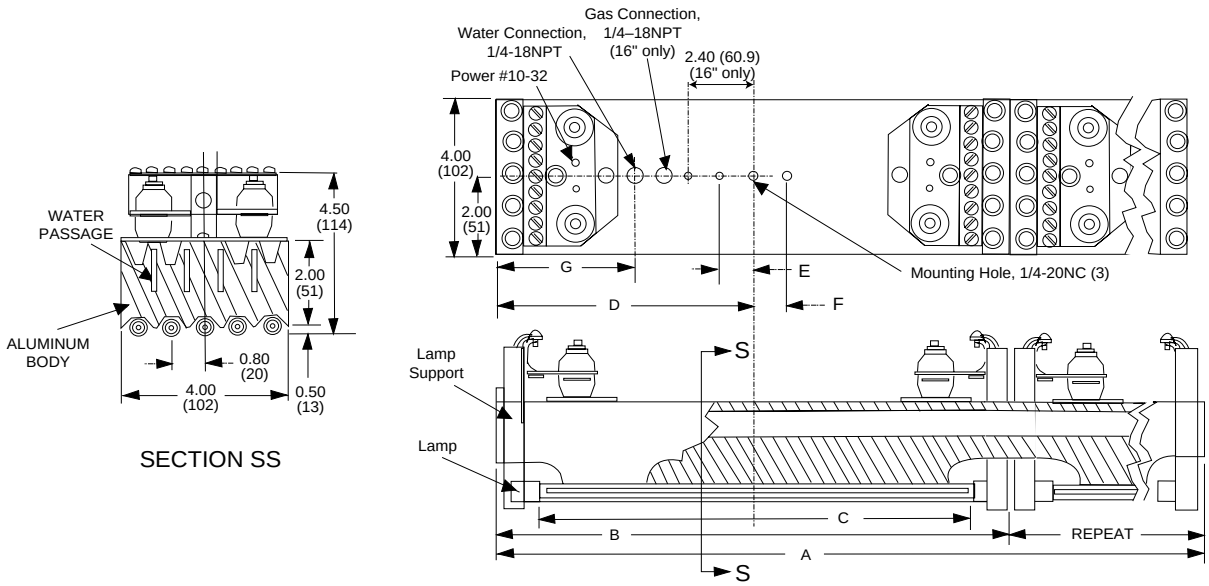

Model Number	Overall Length, A	Individual Section Heater Length, B	Lighted Length, C	Mounting Hole Location, D	Mountig Hole Location E, F	Cooling Water Connection, G
5090-06-01	9.4 (239)	9.4 (239)	6 (152)	4.7 (119)	0.68 (17)	3.35 (85)
5090-06-02	18.8 (478)					
5090-06-03	28.2 (716)					
5090-06-04	37.6 (955)					
5090-06-05	47.0 (1194)					
5090-06-06	56.4 (1433)					
5090-06-07	65.8 (1671)					
5090-06-08	75.2 (1910					
5090-10-01	12.4 (315)	12.4 (315)	10 (254)	6.2 (157)	0.80 (20)	3.6 (91)
5090-10-02	28.8 (732)					
5090-10-03	37.2 (945)					
5090-10-04	49.6 (1260)					
5090-10-05	62.0 (1575)					
5090-10-06	74.4 (1890)					
5090-16-01	20.3 (516)	20.3 (516)	16 (406)	10.15 (258)	0.80 (20)	3.6 (91)
5090-16-01	40.6 (1031)					
5090-16-01	60.9 (1547)					
All dimensions in inches (mm)						

Figure 5: Model 5090 Dimensions

Heater Description – Model 5075

The Model 5075 Multi-Zone Load Test Heater is designed for ultra-high temperature structural testing of composites, metals, and ceramics. It is intended to be used in material test machines to determine the properties of materials at high temperatures. By using two heaters facing each other, the test specimen is enclosed in a chamber which heats the specimen on both sides to attain the maximum heating rates and temperatures. The heater may also be used for other applications where high intensity infrared heat is required for a small area. The basic heater includes the following major components:

Heater Module - The heater uses 'T3-style', halogen lamps backed by a polished aluminum reflector to provide heat. It is available in a variety of heated lengths to accommodate different heating requirements.

Internal Interzone Shields - Internal interzone shields are provided to help separate the heat zones.

Quartz Window - A quartz window protects the reflector and lamps from contaminants.

Specimen Cooling Ports - Inlet and outlet ports are provided to inject specimen cooling gas through the heater for tests where specimen cooling is desired.

Over-Temperature Sensor - A thermostat or thermocouple is attached to the reflector to protect the heater from over-temperature conditions.

Mounting - Tapped holes are provided to mount the heater.

Optional Mounting Brackets - Mounting brackets are available to attach to the cylindrical posts of test machines and allow adjustments so the heater can be oriented in various positions around the target specimen.

Optional External Interzone Shields - External interzone shields can be provided to further separate the heat zones.

Optional Extensometer Access - An extensometer access opening can be provided on the heater.

Optional Cooling Systems - Systems are available to provide required air and water cooling to the heater.

Technical Information – Model 5075

Specimen Temperatures - A pair of opposing Model 5075 heaters have the capability to heat a specimen to temperatures as high as 3090°F (1700°C) for short periods of time. The normal maximum specimen operating temperature is 2650°F (1455°C). The maximum attainable temperature depends on the ability of the target specimen to absorb heat, the radiant emitter temperature and the heat loss from the specimen.

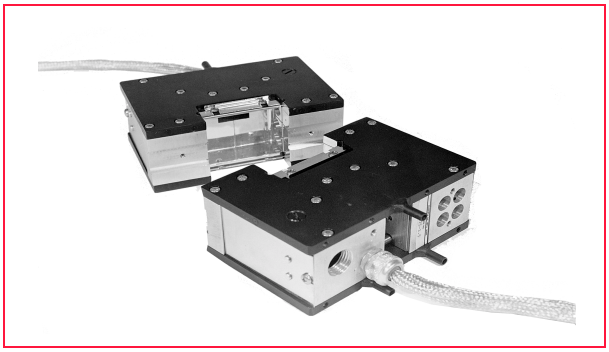

Figure 6: Model 5075 Hi-TempIR Infrared Heater

Specimen Geometry - The cross section of the heated area of a heater is 0.63 inch (16 mm) deep and 2.5 inches (63 mm) wide. With two opposing heaters, a chamber of 1.25 by 2.5 inches (32 by 63 mm) is formed. The recommended specimen width is from 0.75 to 1.75 inches (19 to 44 mm). The specimen should be centered in the heated area or chamber.

Heat Flux Densities - The heat flux density of the heater is 440 watts per square inch (68.2 watts per square cm) in the plane that is flush with the face of the heater.

Heater Module - The heater module is available with two to six zones, with each zone having a length of 0.6 inches (15 mm). The number of heated zones required is specified when the heater is ordered.

Each zone may be individually controlled or several zones may be controlled as one. Typically, at least three heating zones are used, one each for the top, bottom and center (model 5075-1.0 will only accomodate two zones). The top and bottom zones compensate for the heat losses to the specimen grips or other phenomena that can cause non-uniform temperature distribution. The center zone(s) maintain the test specimen temperature. This configuration minimizes the temperature gradient along the specimen.

Lamps - Tubular quartz, 'T3-style', halogen cycle lamps are included with the heater. At rated voltage, the lamp filament temperature is 5400°F (2980°C). Each heat zone has one lamp that dissipates 1000 watts at 120 volts. The number of lamps required to operate the various models is listed in Specifications.

Internal Interzone Shields - The internal interzone shields are provided to help separate the heat zones and minimize the interaction between the zones.

Quartz Window - A quartz window protects the reflector and lamps from contaminants and separates the cooling air from the specimen.

Specimen Cooling Ports - Gases such as air, N_2, or CO_2 can be injected into the heated chamber to rapidly

cool the specimen. The 0.25 inch (6.4 mm) specimen cooling inlet tube is on the rear of the heater module. Two cooling discharge ports are provided per heat zone on the side of the heater module.

Over-Temperature Sensor - The two- and three-zone heaters use a thermocouple to detect over-temperature. All other models use a thermostat. The over-temperature signal can be used to turn off the power to the heater if the reflector gets too hot.

Mounting - Seven 10-32 NF tapped holes are provided on the back of the heater module for mounting.

Mounting Brackets - Mounting brackets are available to fit test machine post diameters of 2.5, 3 or 4 inches (63, 76 or 102 mm) and have post center to specimen center distances from 11.75 to 17 inches (298 to 432 mm). When two heaters are used with the mounting brackets, they are mounted on a slide and hinged so they can be opened for access to the specimen. Mounting brackets are sold separately from the heater.

External Interzone Shields - Slots on the sides of the radiant chamber between the zones allow the use of external interzone shields to further separate the zones. The external interzone shields are sold separately from the heater and must be cut during installation to fit around the specimen.

Extensometer Access - Extensometer access is provided by notching the face of the heater. The notch is 0.156 inch (4 mm) deep and as long as required, up to the maximum lengths indicated in Figure 8. The extensometer access is ordered as an option to the heater and the notch length is specified when ordering.

Cooling Requirements - The heater requires water cooling for the heater body and reflector surfaces. Air cooling is required for the lamp end seals and lamp envelopes. The maximum temperature for both the air and water entering the heater is 100°F (38°C). The water pressure should be between 25 and 150 pounds per square inch (1.75 to 10.5 kilograms per square meter), gauge. The air and water flow requirements increase as the length of the heater increases. Recommended flow rates are listed in Specifications.

Cooling Systems - Three different air cooling systems are available with air flows of 45, 90 and 140 cubic feet (1.27, 2.55 and 3.97 cubic meters) per minute. These systems include a blower, hoses (15 feet [4.5 meters]), and fittings for a typical installation.

The water cooling system is self-contained and is available with a capacity to remove 3.5 kW (12,000 BTU per hour) of heat at 75°F (24°C). The system includes a water-to-air heat exchanger with a pump, a reservoir, and fittings for a typical two-heater installation (including 20 feet [6 meters] of hose and self-sealing, quick-disconnect fittings).

Both the air and water cooling systems are ordered separately from the heater.

Specifications – Model 5075

Model Number	Number of Zones	Number of Lamps	Power Max, kW	Recommended Minimum Rates	
				Air CFM (m^3/min)	Water GPM (LPM)
5075-1.0	2	2	2	6 (0.17)	0.06 (0.23)
5075-1.5	3	3	3	9 (0.25)	0.09 (0.34)
5075-2.0	4	4	4	12 (0.34)	0.12 (0.45)
5075-2.5	5	5	5	15 (0.42)	0.15 (0.57)
5075-3.0	6	6	6	18 (0.51)	0.15 (0.18)

Ordering Information – Model 5075

Model	Product Description
5075	Multi-Zone Load Test Heater
Code	**Heat Zones**
1.0	Two Zones
1.5	Three Zones
2.0	Four Zones
2.5	Five Zones
3.0	Six Zones
Code	**Additional Options**
EA (#)	Extensometer Access; # = Desired Notch Length(1)
00	None
(1) Desired notch length (inches) must be specified when ordering EA option.	

Ordering Example – Model 5075

	Model	Heat Zones	Additional Options
Typical Model Number	5075	2.0	EA (1.5)

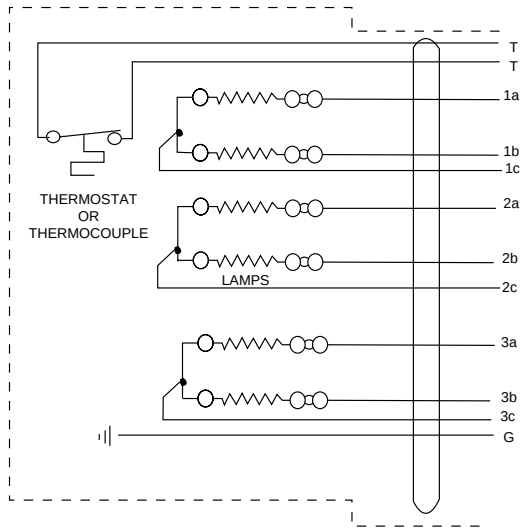

Figure 7: Typical Wiring Schematic Diagramfor Model 5075-3.0

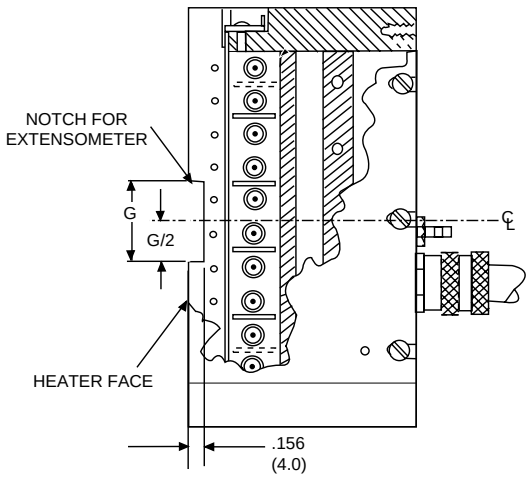

Model Number	Dimension G Max Notch Length
5075-1.0	0.90 (22.9)
5075-1.5	1.50 (38.0)
5075-2.0	2.10 (53.3)
5075-2.5	2.70 (68.6)
5075-3.0	3.30 (83.8)
All dimensions in inches (mm)	

Figure 8: Model 5075 Extensometer Dimensions

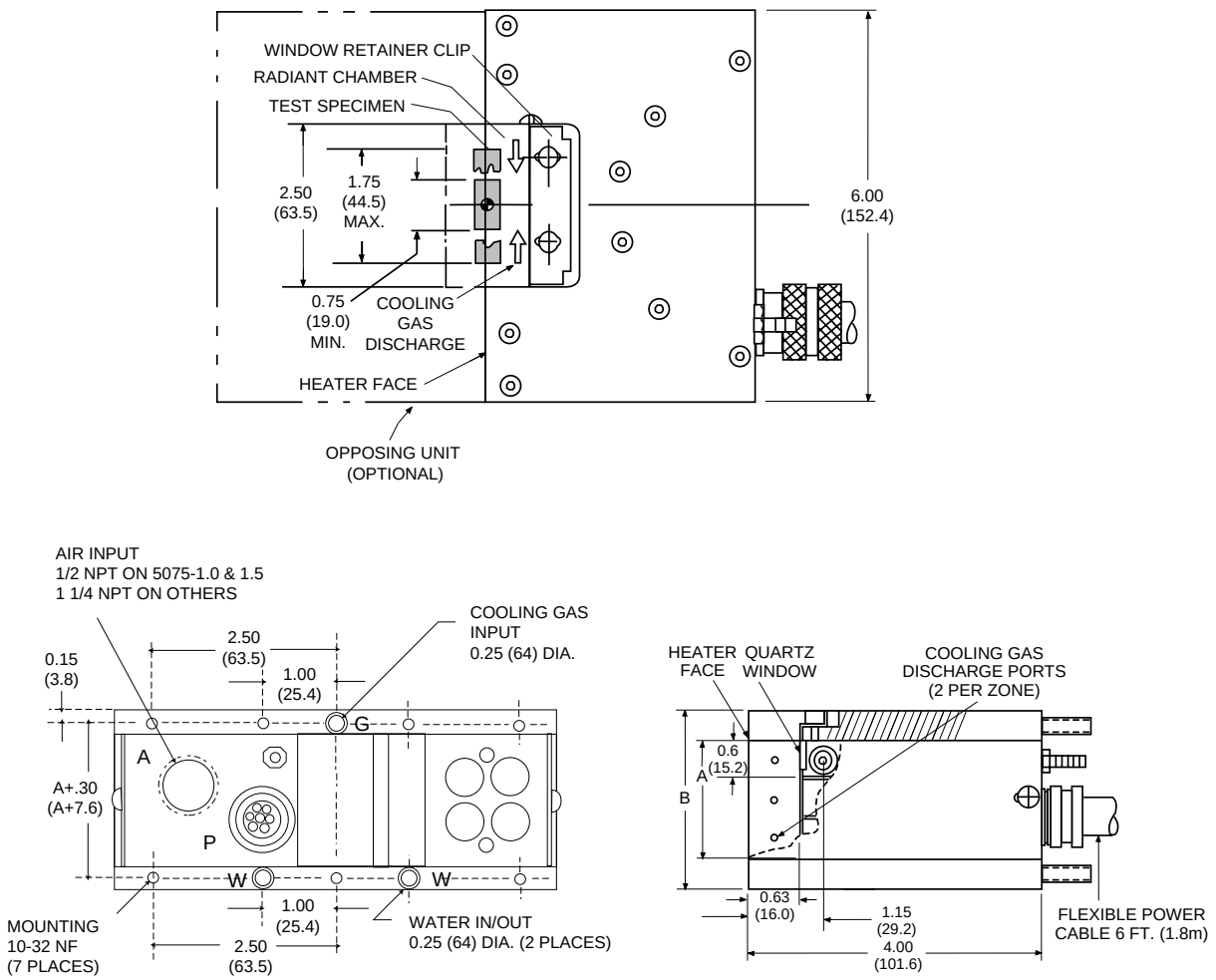

Model Number	Dimension A Chamber Length	Dimension B Overall Height
5075-1.0	1.20 (30.5)	1.80 (45.7)
5075-1.5	1.80 (45.7)	2.40 (61.0)
5075-2.0	2.40 (61.0)	3.00 (76.2)
5075-2.5	3.00 (76.2)	3.60(91.4)
5075-3.0	3.60(91.4)	4.20 (160.7)
All dimensions in inches (mm)		

Figure 9: Model 5075 Dimensions

Accessories - Mounting Bracket – Model 5075

Model	Product Description
MB5070	Mounting Bracket for Model 5075 Load Test Heater
Code	**Test Machine Column Diameter**
1 2 3	2.5 Inch (63.5 mm) 3.0 Inch (76.2 mm) 4.0 Inch (101.6 mm)
Code	**Column Center Line to Specimen Center Line**
1	9.00 to 16.00 Inches (229 to 406 mm)
Code	**Number of Model 5075 Heat Zones**
1 1.5 2 2.5 3	Two Zones (5075-1.0) Three Zones (5075-1.5) Four Zones (5075-2.0) Five Zones (5075-2.5) Six Zones (5075-3.0)
Code	**Additional Options**
00	None

Ordering Example – Model 5075

	Model	Test Machine Column Dia.	Center Line-to-Center Line Dimension	Heat Zones	Additional Options
Typical Model Number	MB5070	2	1	2	00

A= Test Machine Column Diameter*

B= Column Center Line to Specimen Center Line*

*See Mounting Bracket Ordering Information

Figure 10: Model 5075 Mounting Bracket Dimensions

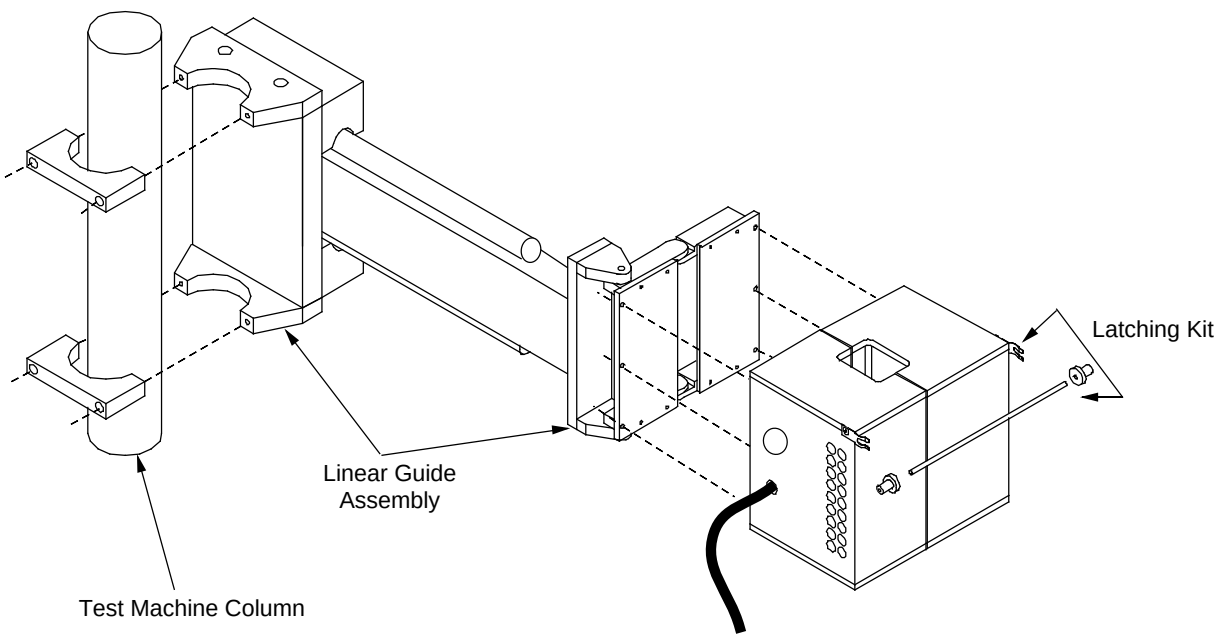

Figure 11: Model 5075 Mounting Bracket Assembly

Accessories - Air Cooling System – Model 5075

Model	Product Description
AC5070	Air Cooling System
Code	**Air Flow Capacity**
10	45 CFM (1.27 m^3 per min.), 115/230 Volt, 3.4/1.7 amps, 60Hz, Single Phase
20	90 CFM (2.55 m^3 per min.), 115/230 Volt, 9.4/4.7 amps, 60Hz, Single Phase
30	140 CFM (3.97 m^3 per min.), 115/230 Volt, 19/9.5 amps, 60Hz, Single Phase
Code	**Number of Model 5075 Heat Zones**
3	Two or Three (5075 - 1.0 or 5075 - 1.5)
4	Four, Five or Six (5075 - 2.0, 5075 - 2.5, or 5075 - 3.0)
Code	**Additional Options**
00	None

Ordering Example – Model 5075

	Model	Air Flow Capacity	No. of Model 5075 Heat Zones	Additional Options
Typical Model Number	AC5070	20	3	00

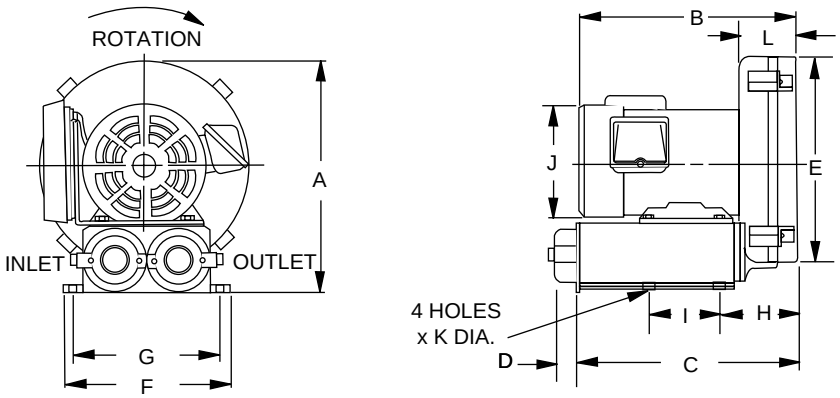

Model Number	A	B	C	D	E	F	G	H	I	J	K	L
AC5075-10	10.24 (260)	7.87 (200)	0.79 (20)	0.79 (20)	9.92 (252)	8.47 (215)	7.48 (190)	3.11 (79)	2.99 (76)	5.20 (132)	0.39 (9.9)	2.60 (66)
AC5075-20	13.26 (337)	11.30 (287)	11.55 (293)	0.98 (25)	12.43 (316)	10.04 (255)	8.86 (225)	4.41 (112)	3.74 (95)	6.42 (163)	0.47 (11.9)	3.27 (83.1)
AC5075-30	15.34 (390)	12.93 (328)	13.33 (339)	0.98 (25)	14.59 (371)	11.61 (295)	10.24 (260)	5.00 (127)	4.53 (115)	7.74 (197)	0.59 (15.0)	4.10 (104.1)
All dimensions in inches (mm)												

Figure 12: Model 5075 Air Cooling System Dimensions

Accessories - Water Cooling System – Model 5075

Model	Product Description
WC5070	Water Cooling System
Code	**Cooling Capacity**
1	3.5 kW (12,000 BTU/Hr) @ 75°F (24°C)
Code	**Line Voltage**
1 2	120 Volt, 60 Hz 230 Volt, 50 Hz
Code	**Additional Options**
00	None

Ordering Example – Model 5075

	Model	Cooling Capacity	Line Voltage	Additional Options
Typical Model Number	WC5070	1	1	00

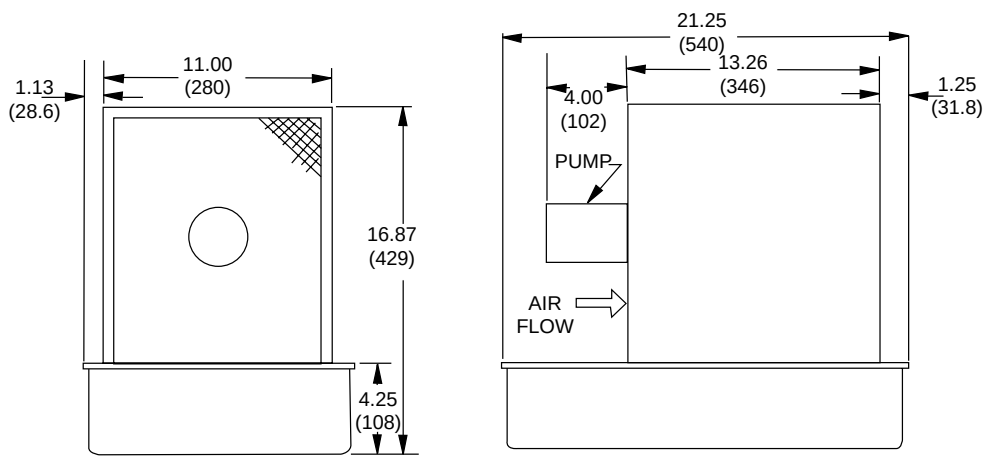

All dimensions in inches (mm)

Figure 12: Model 5075 Water Cooling System Dimensions

Heaters Available from Research, Inc.

Research, Inc. manufactures a wide variety of radiant heating products. In addition to specialty products for high temperature heating, processing shrink tubing and drying ink-jet printing, the following types of heaters are available:

SpotIR™ Series

Spot heaters apply heat to a small spot. The spot size of the Model 4085 Spot Heater is 0.25 inch (6 mm). The energy from the Model 4150 Spot Heater is focused 1 inch (25 mm) from the heating unit onto a circular 0.25 inch (6 mm) spot. Some typical applications for spot heaters are listed:

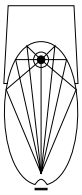

- Soldering and desoldering components
- Local stress relieving
- Brazing
- Igniting remote specimens for laboratory applications

LineIR™ Series

Using an elliptical reflector, line heaters apply heat to a narrow line. The Model 5193 Line Heater focuses energy from the emitter onto a line from 0.08 to 0.18 inch (2 to 5 mm) wide, 2 inches (51 mm) away from the reflector edge. Line heaters are used for a variety of applications:

- Heating plastic prior to bending
- Joining plastic or metal
- Soldering and unsoldering electrical components
- Drying marking ink on electronic circuits

StripIR™ Series

Strip heaters use a parabolic reflector to apply heat to a narrow strip. The Model 5305 Strip Heater concentrates radiant energy on a target strip 1.5 inches (38 mm) wide. The Model 4184 Strip Heater directs energy onto a strip 1.7 inches (43 mm) wide. Some of the uses for strip heaters are listed:

- Heating plastic prior to forming
- Restoring gloss to extruded plastic
- Shrinking plastic caps onto containers
- Curing coatings on panel grooves
- “Glossing” packaged cosmetics

ChambIR™ Series

Chamber heaters apply heat to cylindrical areas and in continuous operations. The Model E4 uses an elliptical reflector to heat products up to 2.5 inches (64 mm) in diameter. The Model 4068 Parabolic Clamshell Heater focuses heat onto products up to 9.25 inches (235 mm) in diameter. Chamber heaters are used for a wide range of applications:

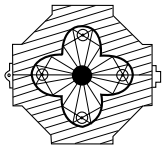

- Annealing wire
- Curing silicone medical tubing
- Curing automotive hoses and tubing
- Preheating metal parts prior to plastic coating
- Curing coatings or adhesives on wire or cable
- Thermal stress testing

PanelIR™ Series

Single panel heaters apply heat to areas that range in size from 3 by 5 inches (76 by 127 mm) to 38 by 144 inches (965 by 3657 mm). Multiple heater arrays can be created to heat larger areas. Both low and high density panel heaters are available. Panel heaters are used for a variety of heating applications:

- Drying adhesive
- Curing coatings
- Drying paint
- Fusing plastic
- Stress relieving metal
- Stretch forming metal

SimulateIR™ Series

The Model 5236 Space Thermal Simulation Modules are used for efficient irradiation of test vehicle surfaces to simulate the infrared energy generated by the sun, planet reflection, and planet radiation inside a space chamber. Use of these heaters is practical in situations where full spectrum solar simulation is not necessary or may not be economically feasible.

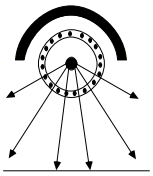

ControlIR™ Series

All the heaters available from Research Inc. require electrical power control for operation. Phase angle, Silicon Controlled Rectifier (SCR) power controllers are available in different configurations ranging from 20 to 300 amps and 120 to 480 volts. Stand-alone SCRs as well as complete power control systems incorporating web speed control, product detection, and product temperature control are available.

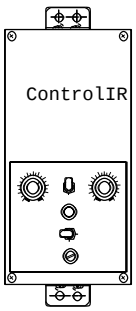

Typical Infrared Heating Applications

Infrared Heating Application		SpotIR	LineIR	StripIR	PanelIR	ChambIR	Hi-TempIR
Coatings	Gel and Cure Powders				Ð		
	Dry and Cure Paints				Ð		
	Dry Inks			Ð	Ð		
	Dry Adhesives			Ð	Ð		
	Dry Screen Printing				Ð		
Material Testing	Coupon Tests					Ð	Ð
	Structural Tests				Ð		Ð
Metal Processing	Weld Stress Relief			Ð	Ð		Ð
	Brazing		Ð			Ð	
	Spring Stress Relief					Ð	
	Annealing	Ð	Ð			Ð	
	Super Plastic Forming				Ð		
Electronics	Soldering/Desoldering	Ð	Ð		Ð		
	Wafer Processing						Ð
	Thick Film Drying				Ð		
	Ceramic Processing				Ð		
	Shrink Insulation			Ð		Ð	
	Solder Termination	Ð	Ð				
Composites	Curing				Ð	Ð	Ð
	Forming Thermoplastics		Ð		Ð		
	Filament Winding	Ð	Ð				
Plastics	Welding	Ð	Ð				
	Bending and Forming		Ð		Ð		Ð
	“Reglossing”			Ð	Ð		

Represented by:

Research, Inc. reserves the right, without notice, to alter or improve the designs or specifications of the products described herein. No warranty or guarantee of any kind is expressed or im-

Printed in U.S.A. © Research, Inc., July, 1998