Argonne NATIONAL LABORATORY

... for a brighter future

ANL Efforts Toward Two Beam Accelerations ------

a Pathway Toward Future HEP Linear Colliders

Wei Gai

ANL BA Seminar

April 23, 2010

U.S. Department of Energy

UChicago Argonne LLC

A U.S. Department of Energy laboratory managed by UChicago Argonne, LLC

Outline

- Overview
- Recent High Power Generation Experiment
- AWA Upgrade
- Collaboration works with other groups
- Summary

Overview

AWA Group

- Staffs/Visitors:
  - S. Antipov, M. Conde, S. Doran, W. Gai, R. Konecny, B. Jiang, C. Jing, M. Lien, W. Liu, D. Mihalcea, J. Power, Z. Yusof and J. Zmuda.

- Students:
  - B. Feng, M. Rihaoui, E. Wiesnewski, C. Zhang

Challenges for Future HEP Linear Colliders

- High gradient (~hundreds MV/m) and High Impedance (high R/Q)
  - Requires new or alternative accelerating structures.
- High Power RF Sources (~ GW Scale)
  - Requires new type sources.
- Higher order mode damping
  - Requires beam breakup control.
- Positron acceleration

- **Alternative Structures (Example, dielectric):**
  - **Comparable accelerating properties as metal structures; More material options; Possibly higher gradients;**
  - **Can be used as power extraction at GW level**
  - **Simpler geometry, easy to construct and HOM damping.**
  - **No difference for e- and e+.**

Alternative collider schemes beyond ILC/CLIC:

- Forward looking beyond the current CLIC parameters. Many advanced accelerator schemes are being studied (much less mature than CLIC, however) :
  - Laser driven plasma wakefield
  - Electron beam driven plasma wakefield
  - Dielectric wakefield accelerator

- History has shown many good designs may not materialize into real machines (cost and …).

- Technology breakthroughs will lead to better and cheaper machine.

We are operating a unique facility (AWA) to:

- High-Power/High-Brightness Electron Beams for Wakefield Accelerations and applications to future LC.

  Producing world record high current electron beams; developing technologies for beam generation, propagation, & characterization.

- Advanced Accelerating Structures and Concepts
  - Design, construction and testing of high gradient WF structures: dielectrics, photonic band gap, tunable dielectric and left-handed meta-materials.
  - Enhanced transformer, multi-drive beam wakefields and solid state PASER.

- Support for Existing HEP programs
  1. **Positron source for ILC/CLIC**
  2. **Lab Astrophysics**
  3. **Providing facilities for collaborator/user's research program.**

RF breakdowns in accelerating structures are not well understood, but …

- Data seems to show higher RF breakdown threshold (or lower breakdown rate) with shorter pulse (~ 10 ns).
- This may give us a path to high gradients for multi-TeV class accelerator using Wakefield Acceleration:
  - Can generate RF with high current electron beam;
  - RF pulse length can be easily controlled;
  - Or Simply Using Collinear WF Accelerator.
- Key to the success:
  - Drive beam development.

Advanced Accelerating Structures Development

Improved Iris loaded structures

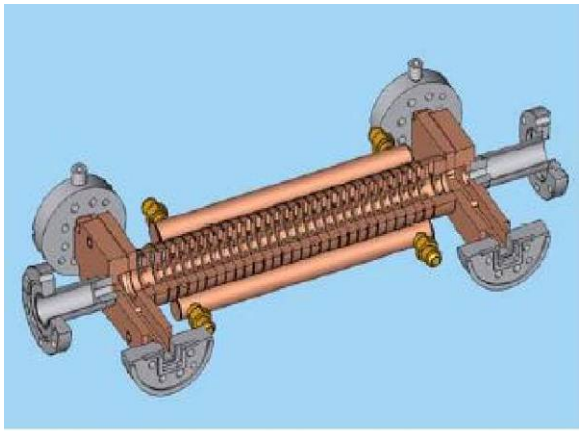

Dielectric loaded structures

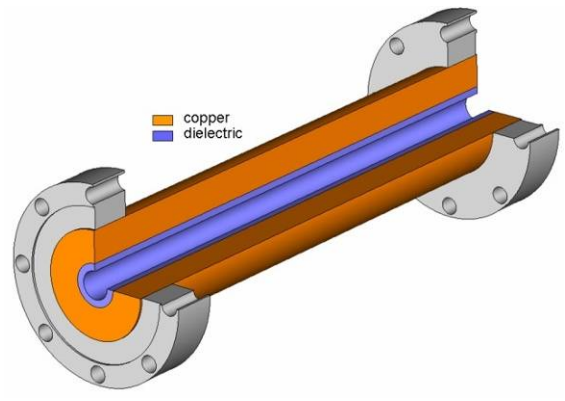

Photonic band gap structures

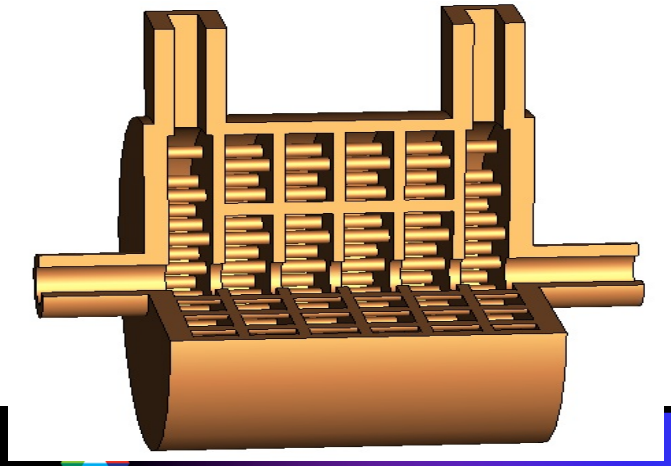

Meta/left-handed structures

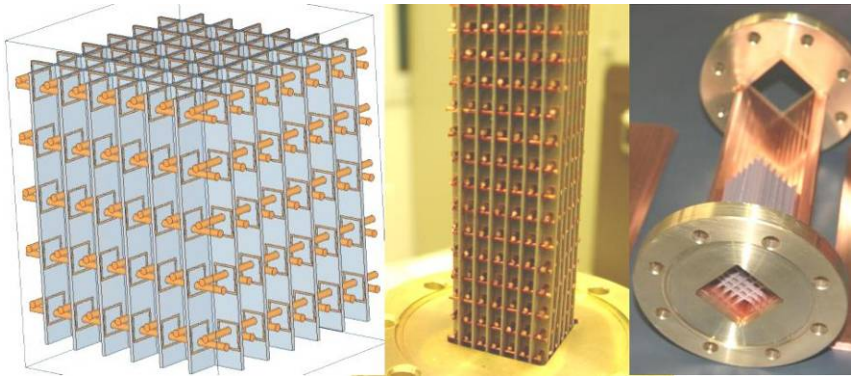

A Pathway to TeV Class Linear Colliders

Wakefield Acceleration

- **Advanced structures:** dielectric-loaded (and other novel) structures to reach high-gradient (hundreds of MV/m)
- **High power sources**: drive beam generates GW scale RF

First POP Data

At ANL

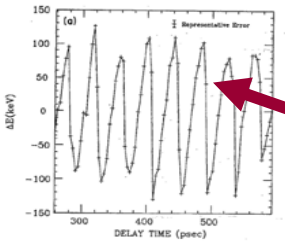

First Plasma and

Dielectrics

POP Data

At ANL

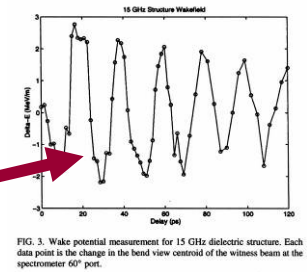

FIG. 3. Wake potential measurement for 15 GHz dielectric structure. Each data point is the change in the bend view centroid of the witness beam at the spectrometer 60° port.

Two-beam acceleration GeV Module

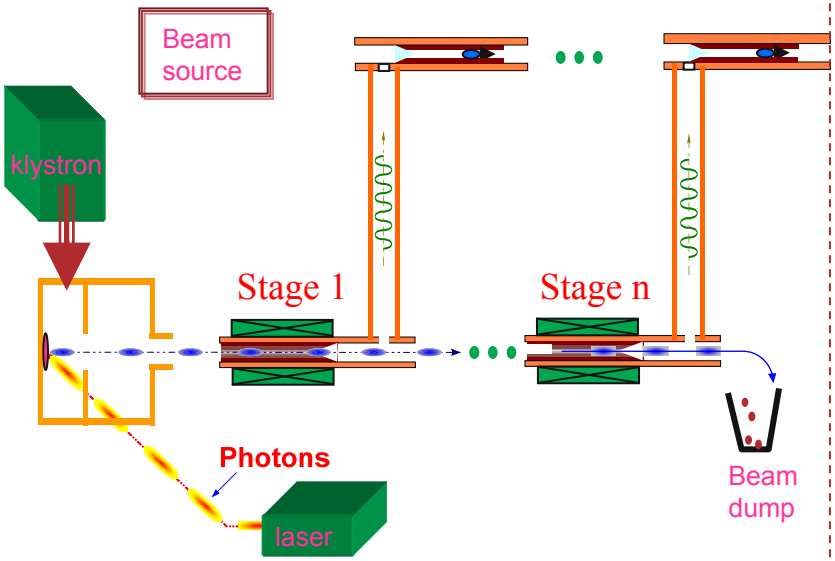

Collinear GeV Module

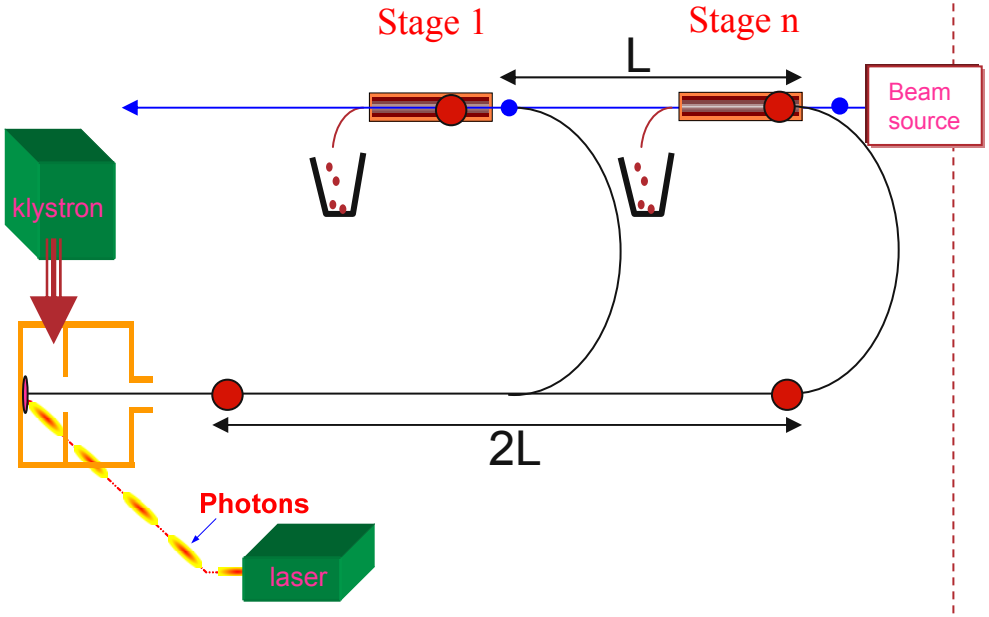

Conceptually, either scheme can be staged to TeV scale

Electron Beam Driven High Gradient Wakefields

- A new way to power the accelerating structure by transporting the power in the electron beam.
- Applications
  - ***Collinear wakefield acceleration***
  - ***Two-beam acceleration***

Keys to the success: Drive beam, drive beam and drive beam!

- Energy ↑, Charge ↑ Bunch length ↓ Emittance ↓

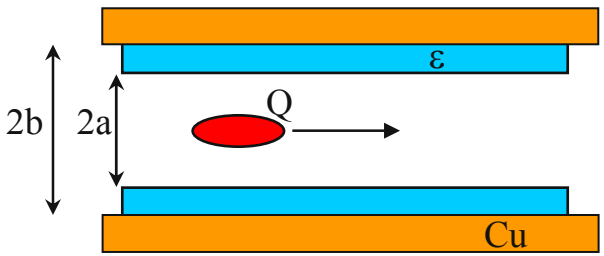

$$W_Z(z) \approx \frac{Q}{a^2} \exp\left[-2\left(\frac{\pi\,\sigma_z}{\lambda_n}\right)^2\right]\cos(kz)$$

$$\sigma_r = \left(\frac{\varepsilon_N}{\gamma}\beta\right)^{1/2}$$

10 nC a=0.1 mm → 5 GV/m.

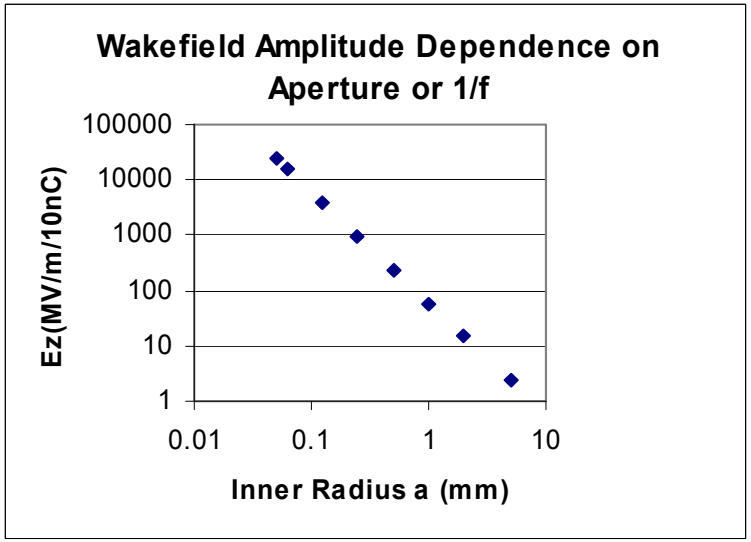

Some Thoughts on Linear Collider Scaling

- Luminosity

$$L = \frac{q^{+} q^{-} N_b f}{\varepsilon_x \varepsilon_y} \cdot F$$

- Where
  - $q+$, q^- are the positron and electron charges. Nb is the number of bunches per train and f is the repetition rate. F is a constant makes the unit correct. ε_x ε_y are the transverse emittances.
- Emittance Growth rate in Accelerating structures
  - $\delta\varepsilon \propto W_{\perp}\, \delta x$ (Difficult to control, contribute to single and multiple bunch beam instabilities).
  - $\delta E \propto W_{//}$ (This can be corrected)

Wakefield Scaling vs Frequency

- Normally the structure aperture a is a fraction of the wavelength (otherwise Er>>Ez). → a ~ λ for the first order approximation.
- In general, we have

$$W_{\perp} \propto \frac{1}{a^3} \propto \frac{1}{\lambda^3} \propto f^3$$

- Then, emittance growth rate without damping:

$$\Delta\varepsilon \propto W_{\perp} \propto f^3$$

- We chose to work on the WF scheme in the microwave (~ 10 – 100 GHz range).

ANL Two Beam Linear Collider*

(an attempt to put together a straw-man layout based on short RF pulse assumption)

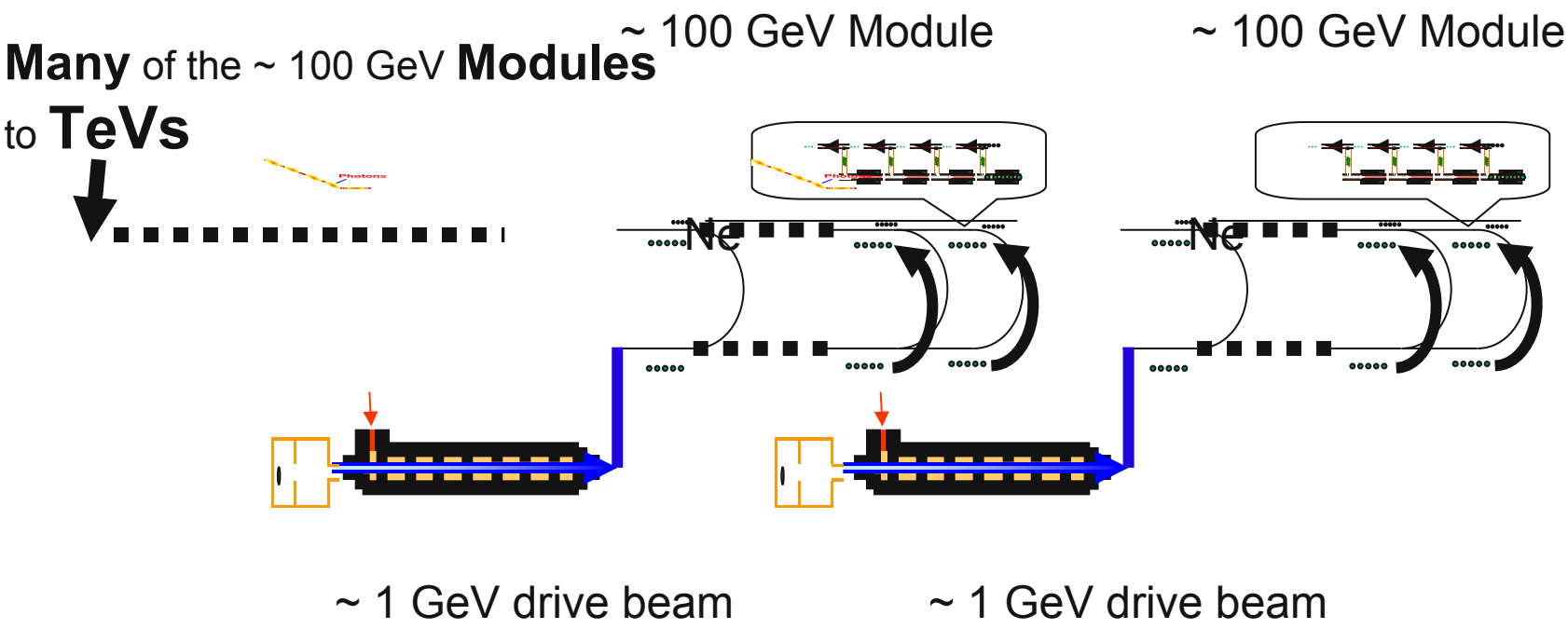

Major features: 1) Short pulses (<20 ns), high gradient (200 ~ 300 MV/m),
2) Direct drive beam generation using RF photocathode and SW technologies

* Similar studies were done by J. Simpson and W. Gai in early 90s.

Electron Bunch Trains Generate Accelerating RF Power – 5 GeV Module

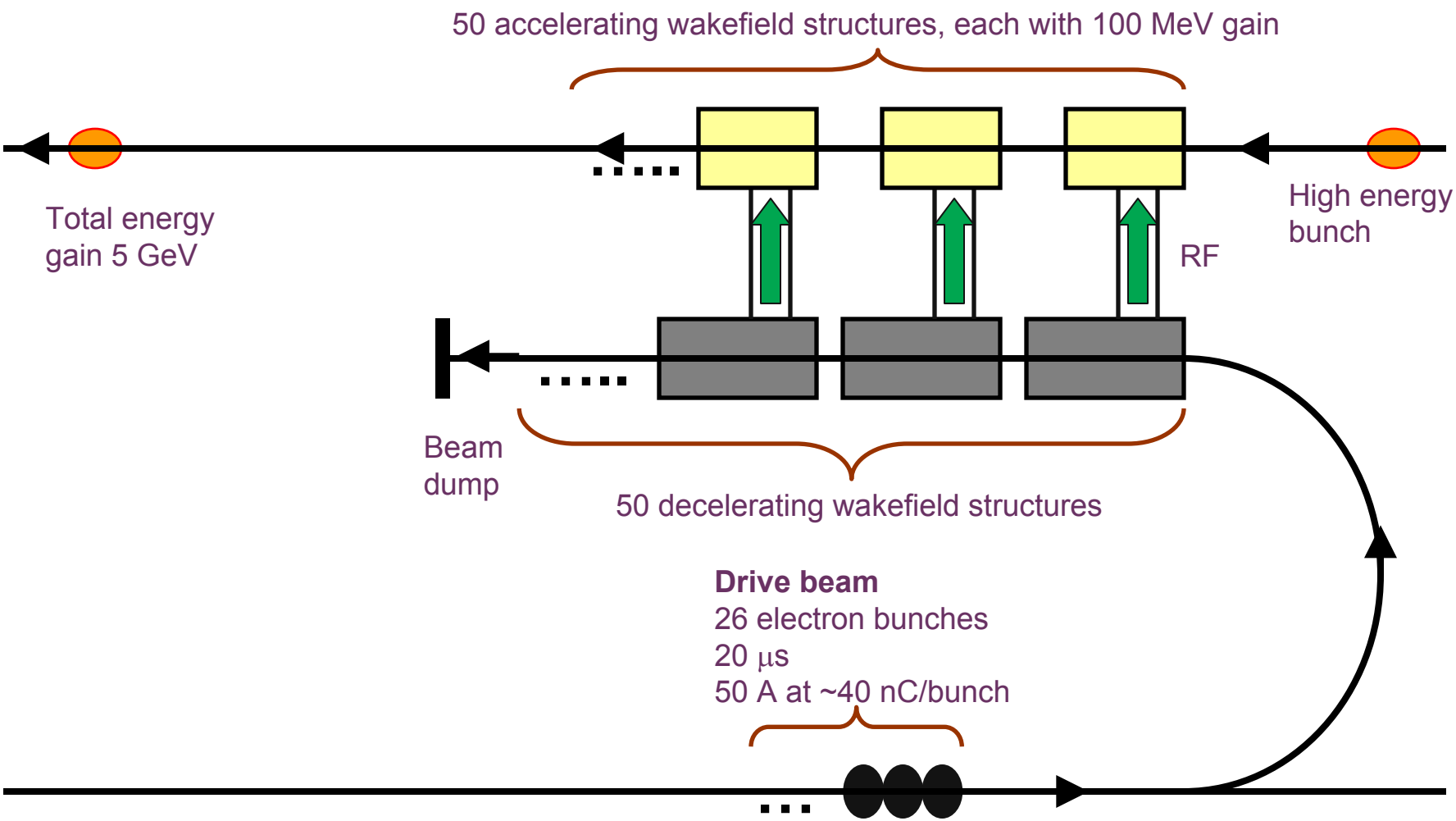

Electron Bunch Trains Generate Accelerating RF Power – 5 GeV Module

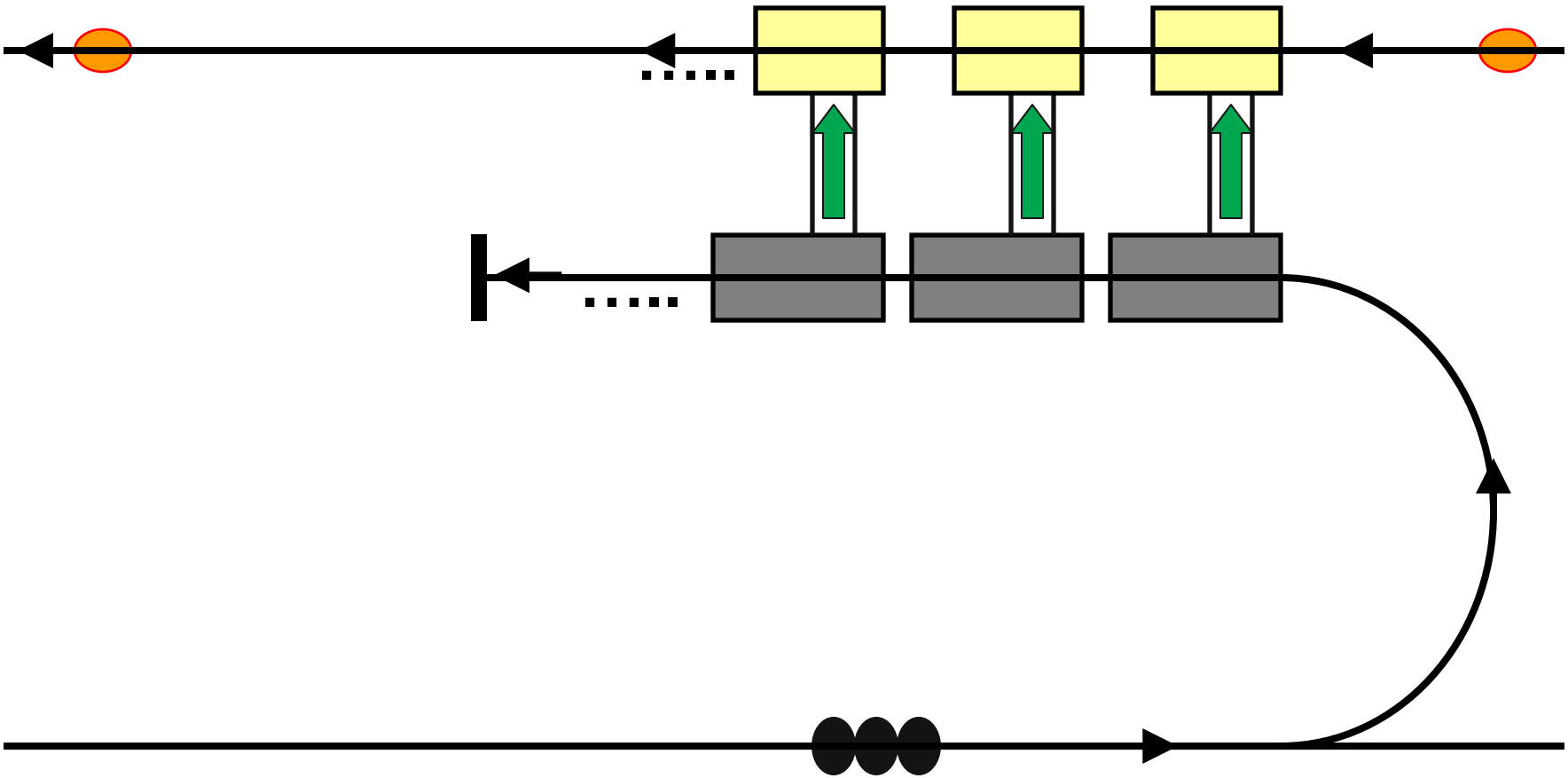

Electron Bunch Trains Generate Accelerating RF Power – 5 GeV Module

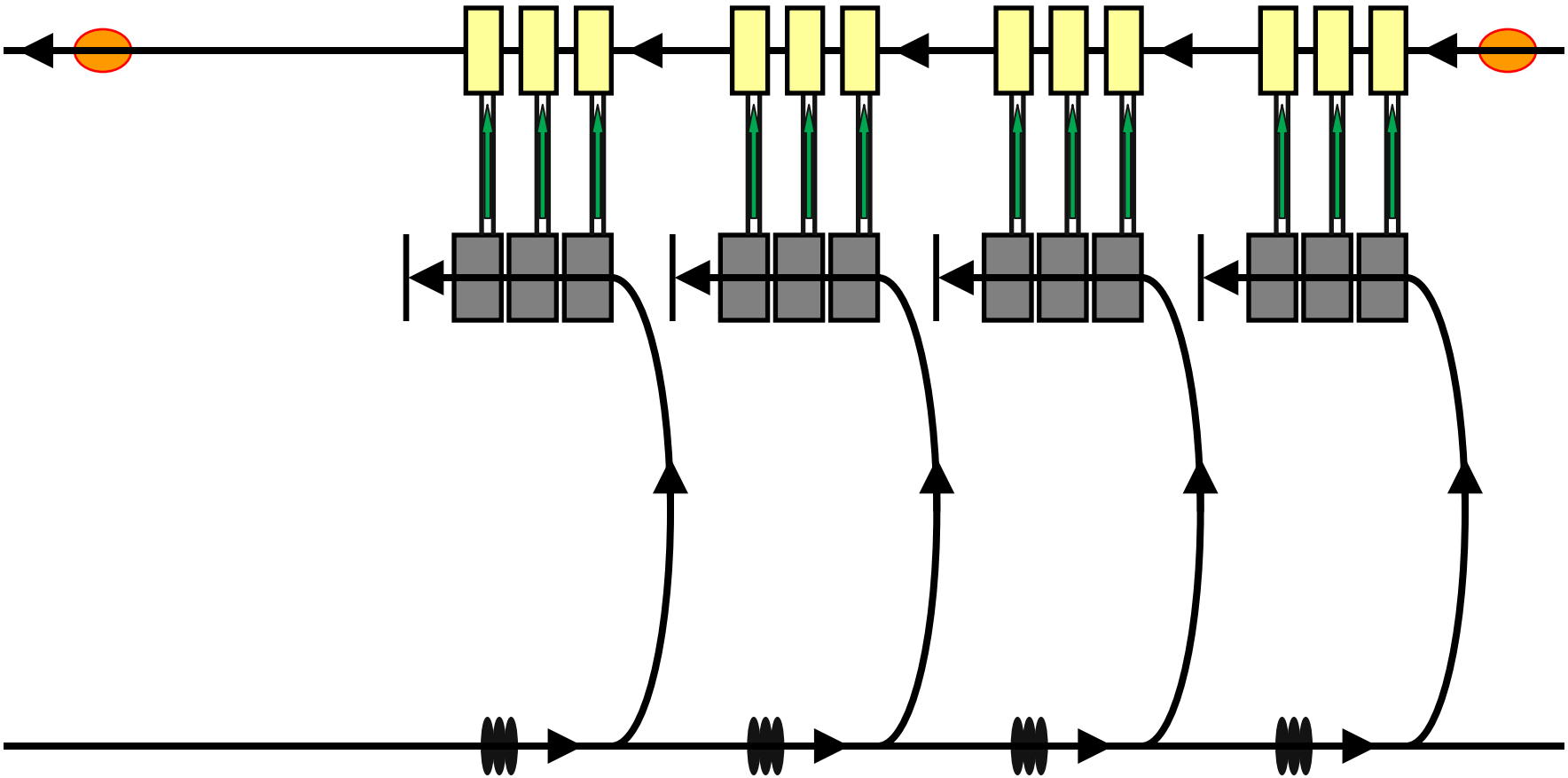

Staging 20 Units of 5 GeV Modules

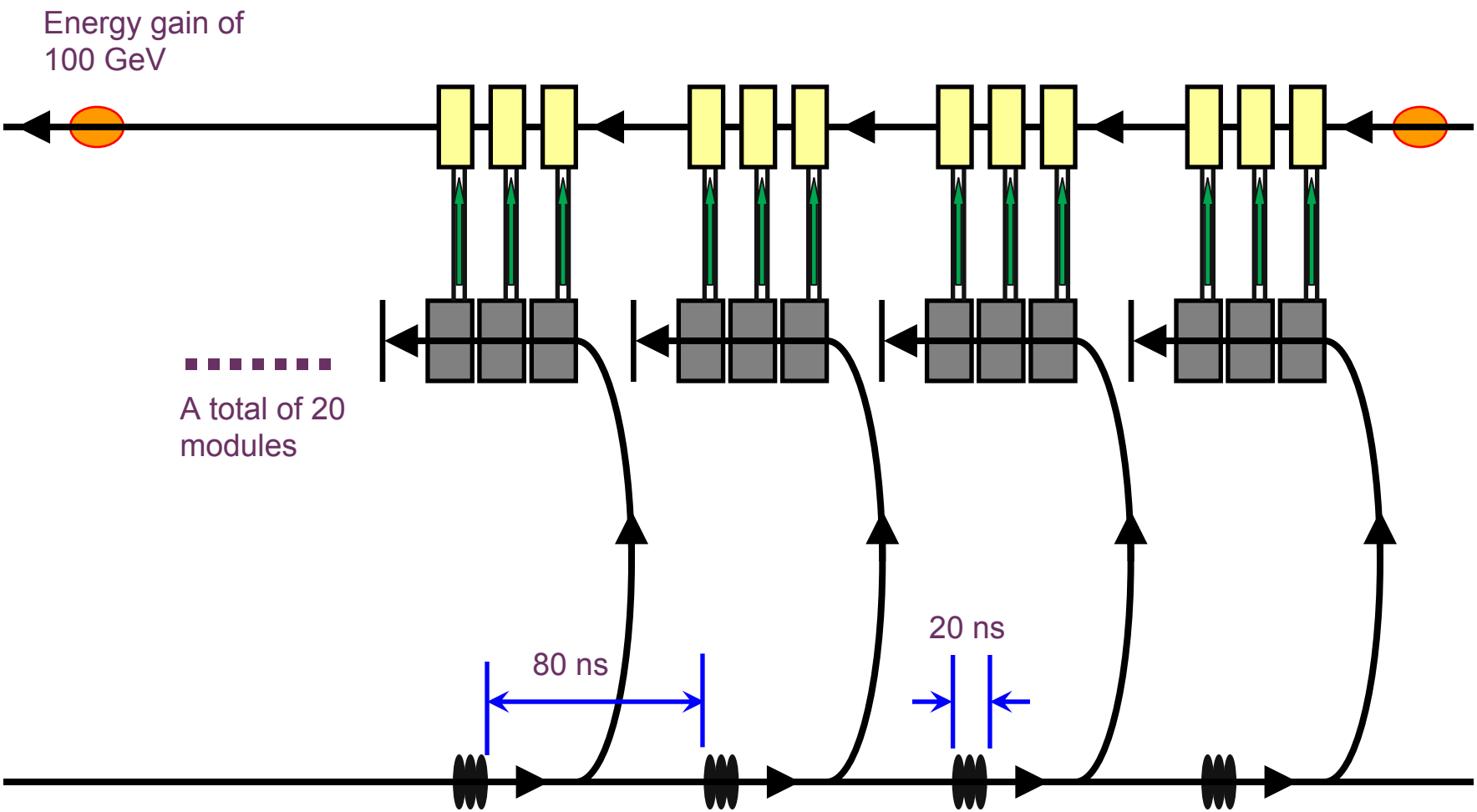

A Parameter Example of a 100 GeV Module

- Drive beam:
  - A high efficient SW accelerator, for high efficient beam acceleration: 1 GeV, 50 A,
  - A long RF pulse (100 micro-second) , generate a pulse train of 10 – 20 ns, spaced at 80 nano-second.
- Power Extraction
  - 50 stages, 1 GW Each Stage.
- Accelerator
  - 50 stages, Each stage accelerate beam 100 – 300 MeV (depend on gradient), let's assume 100 MeV from now on.

Accelerator

- Example (reference, needs to be refined):
  - 21 GHz, a = 2-3 mm, b = 3-4 mm, ε=12, V_g=0.08
  - For E_z ~ 250 MV/m, it requires P> = 1 GW
  - ~ 20 ns RF pulse, structure length : 33 cm, fill time = ~ 10 ns.
  - Each stage accelerate beam 100 MeV

Flexible Drive Beam Structure

Example → M=20 micro-pulses & n=50 macro-pulses

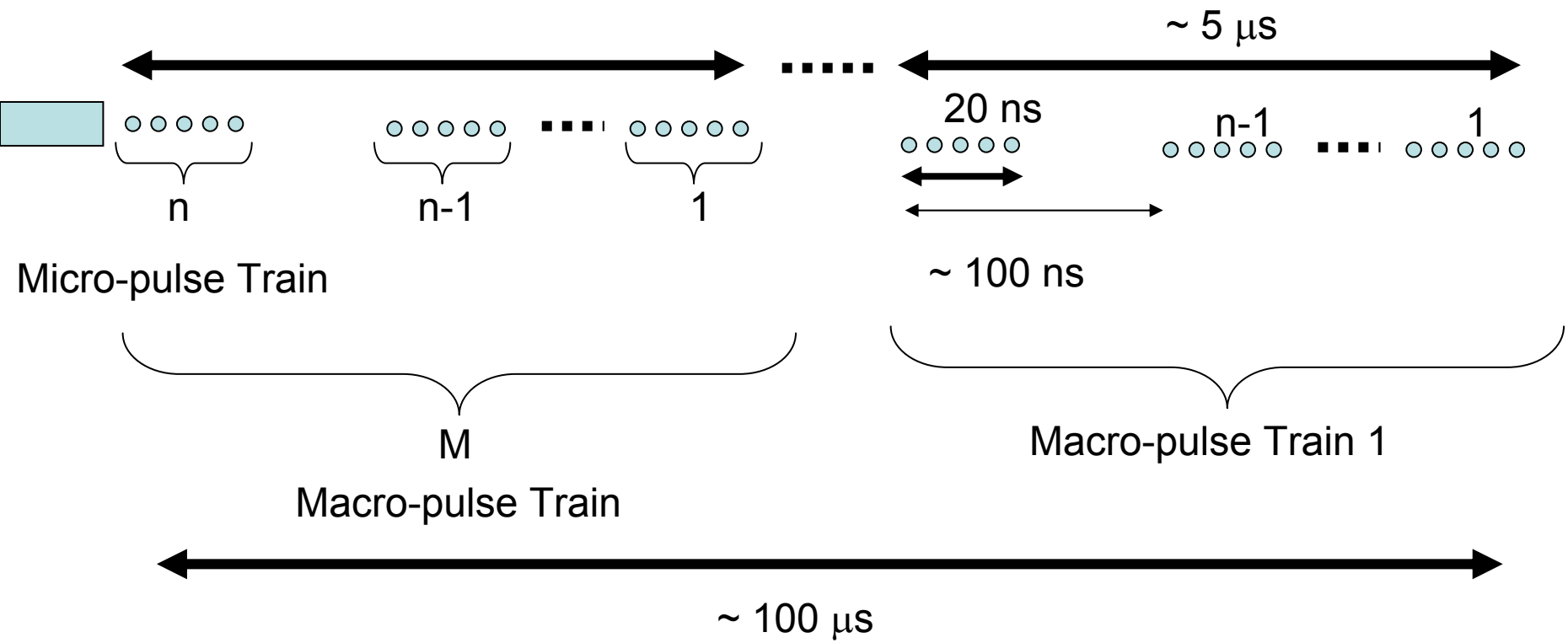

Flexibility →

- Optimize n and M for either high energy or high intensity
- Modularity allows scaling to high energy

Research High Power Extraction Experiments

High Power generation and extraction (7.8 and 26 GHz)

Flexible Beam Parameters at the Argonne Wakefield Accelerator (AWA)

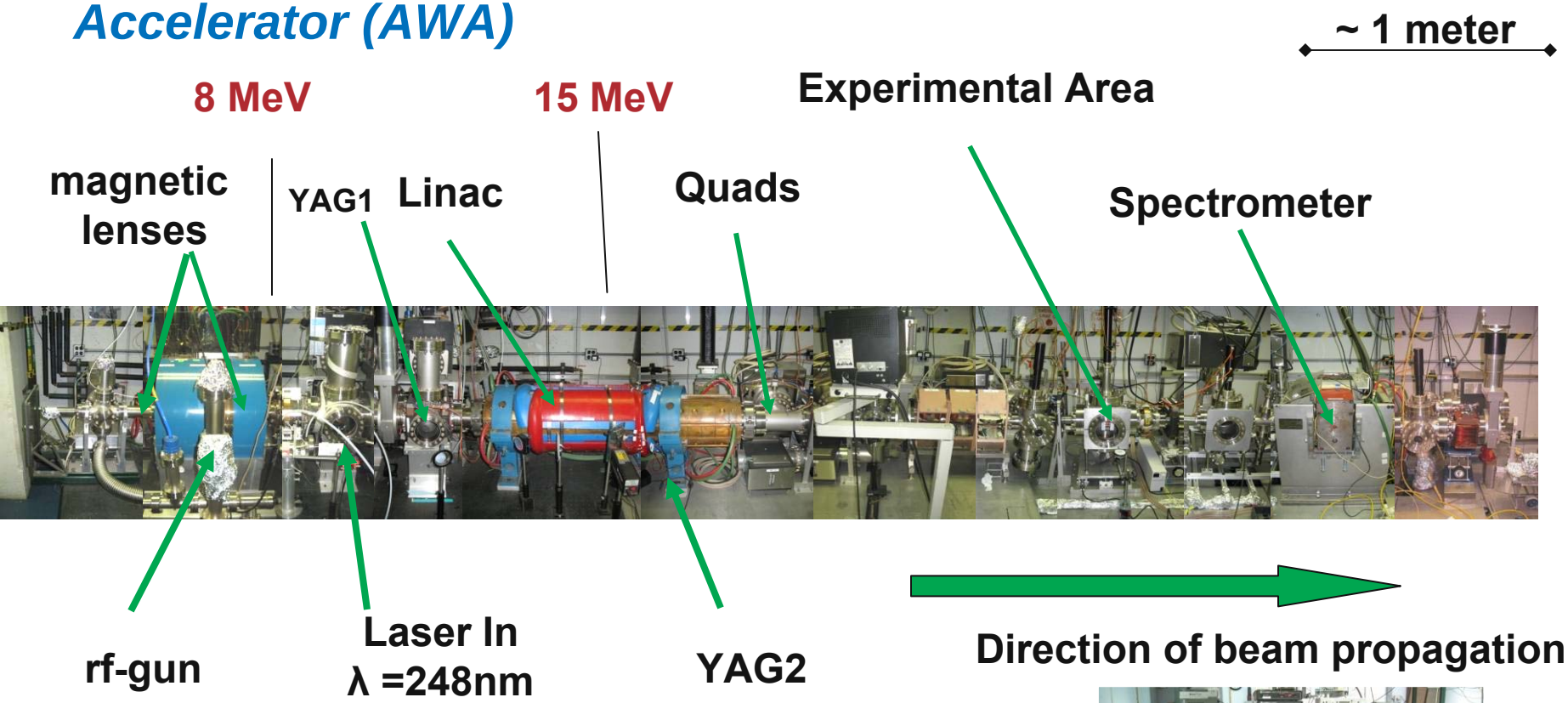

Single bunch operation

Q = 1-100 nC (reached 150 nC, World record?)
15 MeV, 2-2.5 mm bunch length (rms),
emittance < 200 mm mrad (at 100 nC)
High Current: ~10 kA

Bunch train operation

4 bunches x 20 nC (current)
16 bunches x 5 nC (current)
16 - 64 bunches x 100 - 50 nC → 10 - 50 ns long, 23 MeV (future, ~GW beam power).

High Power RF generation using dielectrics and high current bunch train (7.8 GHz Power Extractor)

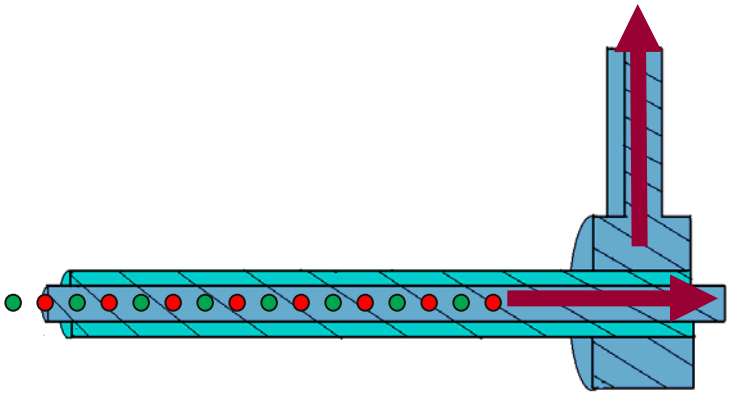

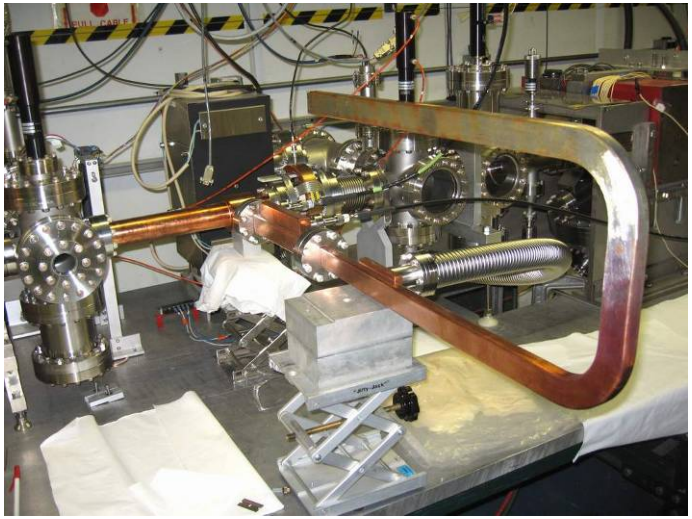

f_{RF} GHz	ID mm	OD mm	L mm	ε_r	β_g	t_d ns	δ_d 10^{-4}	Q_w	Q	$[r/Q]$ kΩ/m	r_{sh} MΩ/m
7.8	12.04	22.34	266	4.6	0.23	2.9	5	8777	2745	6.09	16.7

dielectric = cordierite

(If successful, this technology might have impact on CLIC)

Development of Dielectric-Based Wakefield Power Extractors

C-Band Wakefield Power extractor

- 30ns,1MW & 6ns, 40MW 7.8GHz rf pulse produced
- 20ns, > 500MW with the upgraded AWA beamline.

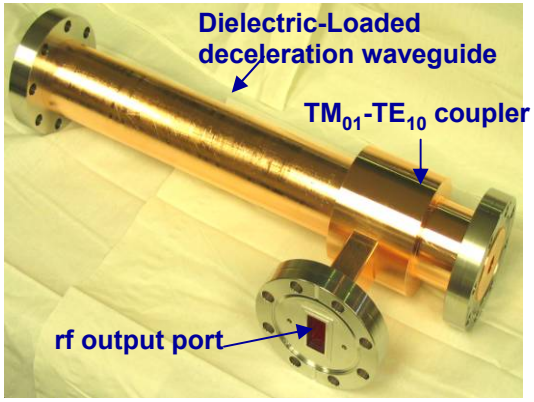

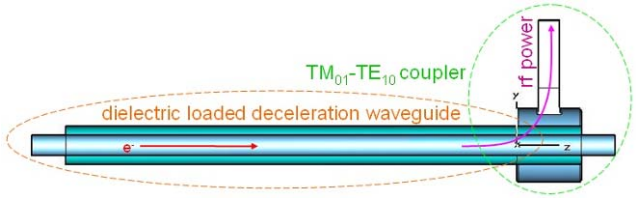

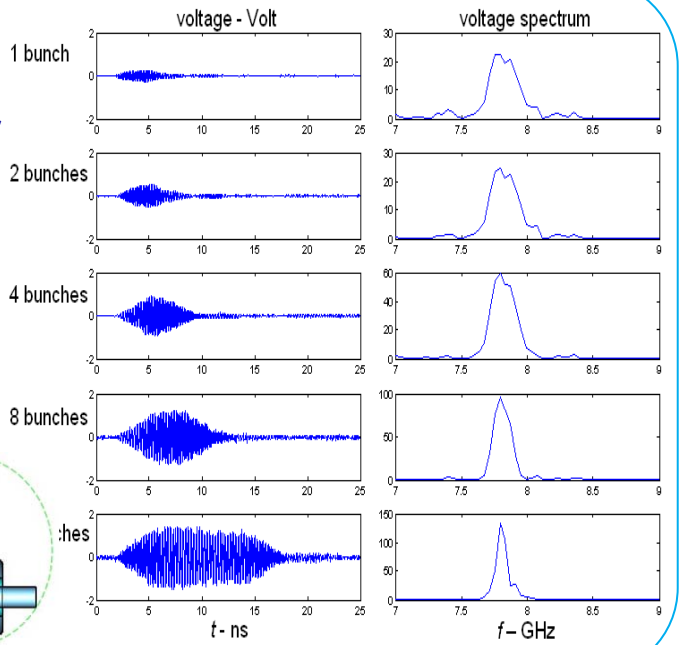

Ka-Band Wakefield Power extractor

- 16ns,1MW & 6ns, 30MW 26GHz rf pulse prodced
- Working toward 20ns 150MW.

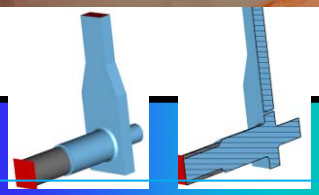

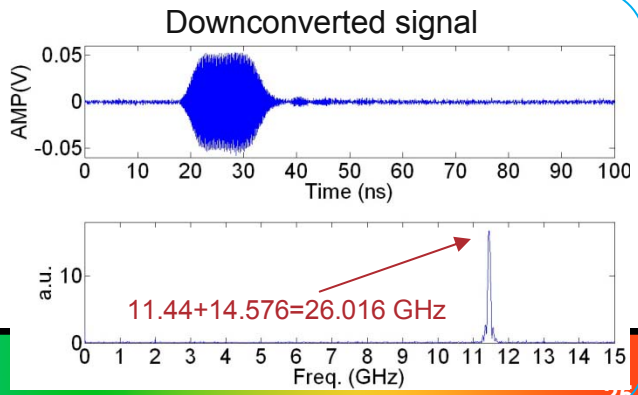

Planned experiments using the existing 15 MeV beamline:

- High transformer ratio:
  - Ramped bunch (Euclid) (2010, ongoing, R>3 observed)
  - Rectangular two channel (Yale/Omega) (2010, installing now)
  - Ring beam (Yale/Omega). (2010)
- Advanced Structures
  - High gradient Photonic Band Gap (2010, Tisnghua)
  - Tunable Dielectric Structure Wakefield Experiment. (2010, Euclid)
  - Beam Break Up control (2010, Euclid)
  - High Power extraction (2010, ANL/Euclid)
- High brightness beam experiment.
  - Demonstrate Emmittance exchange (applications to beam cooling and LC sources).

AWA Upgrade

- From 15 MeV to 75 MeV drive beam

Pathway to higher gradients and higher powers (beams, beams, beams)

- We are approaching the limitations of the single beam capabilities. We need to generate a higher charge bunch train to increase the gradient. Currently, we are installing new gun and cathode to:
  - Increase the QE by a factor of 100 (using cesium telluride photocathodes). These high QE photocathodes will make possible the generation of long, high charge bunch trains. (Jointly supported by ONR and ANL LDRD).
  - Build 3 additional L-band RF power station klystrons (thanks to DOE and B. Carlsten & S. Russell (LANL), for loaned klystron). This will increase the beam energy from 15 MeV to 75 MeV using additional Linac tanks.

The beam energy will be up to 75 MeV in a few years

- Thanks for DOE support, we will able to upgrade the facility to 75 MeV
  - Two additional Klystrons and associated RF components.
  - 5 Additional Linac Tanks
  - Reconfigured Tunnel and Beamlines

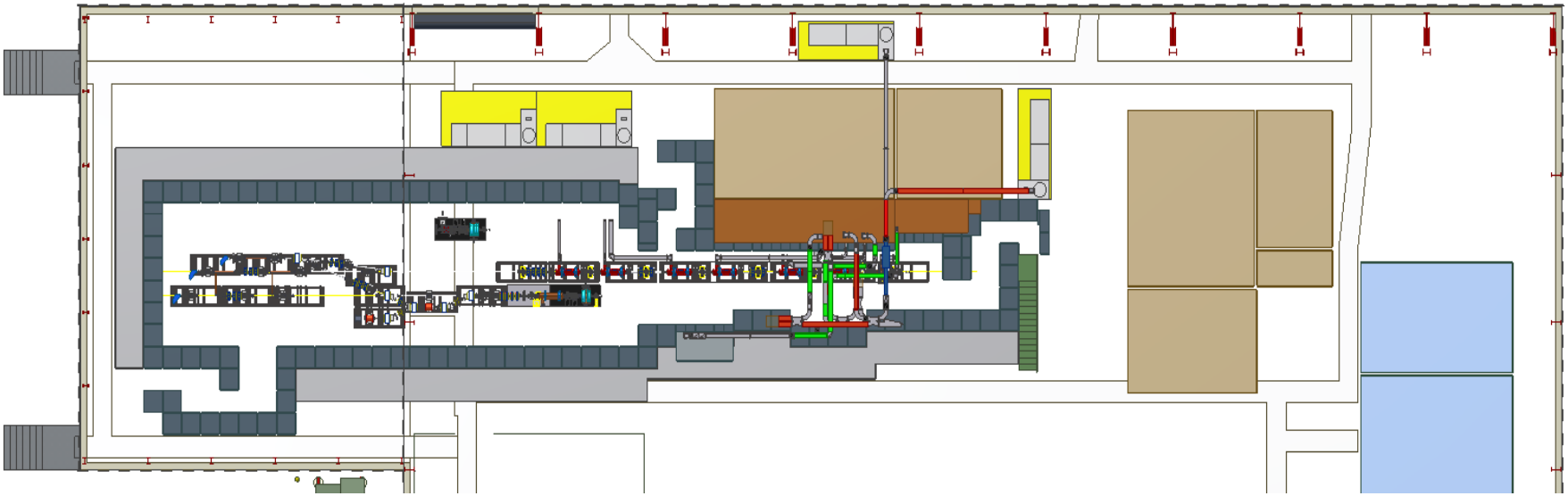

The AWA Upgrade Plan

AWA - Project Update
Experimental Beamlines

- AWA Future Experimental Beamlines

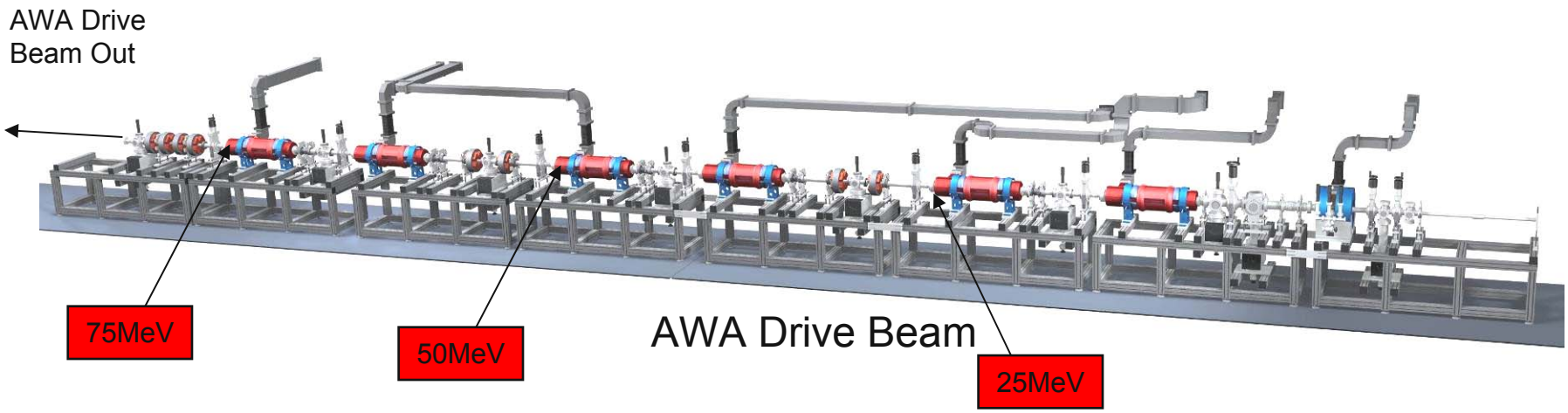

Reconfigured experimental area, 3 beam lines:

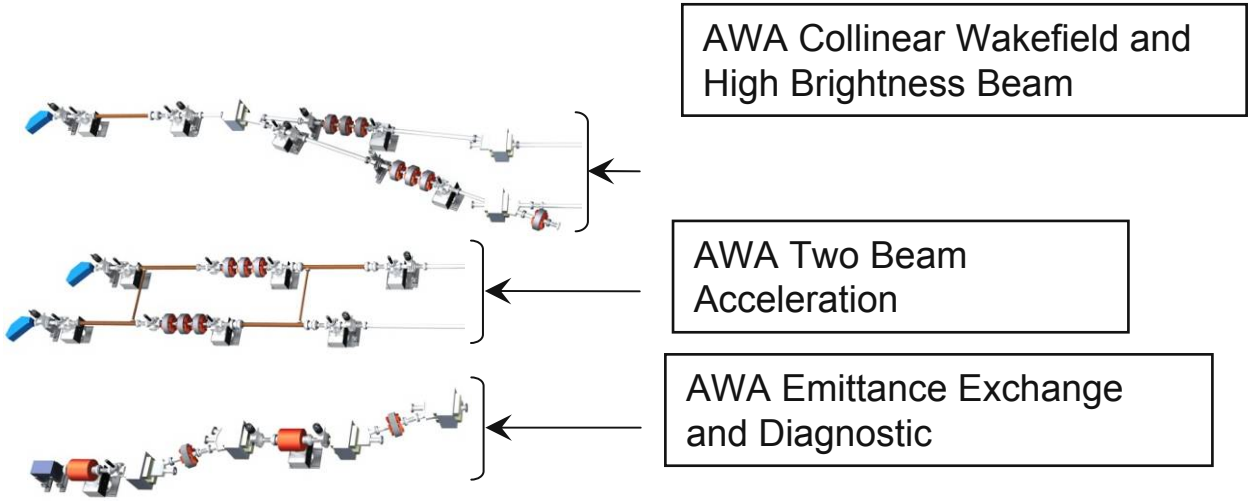

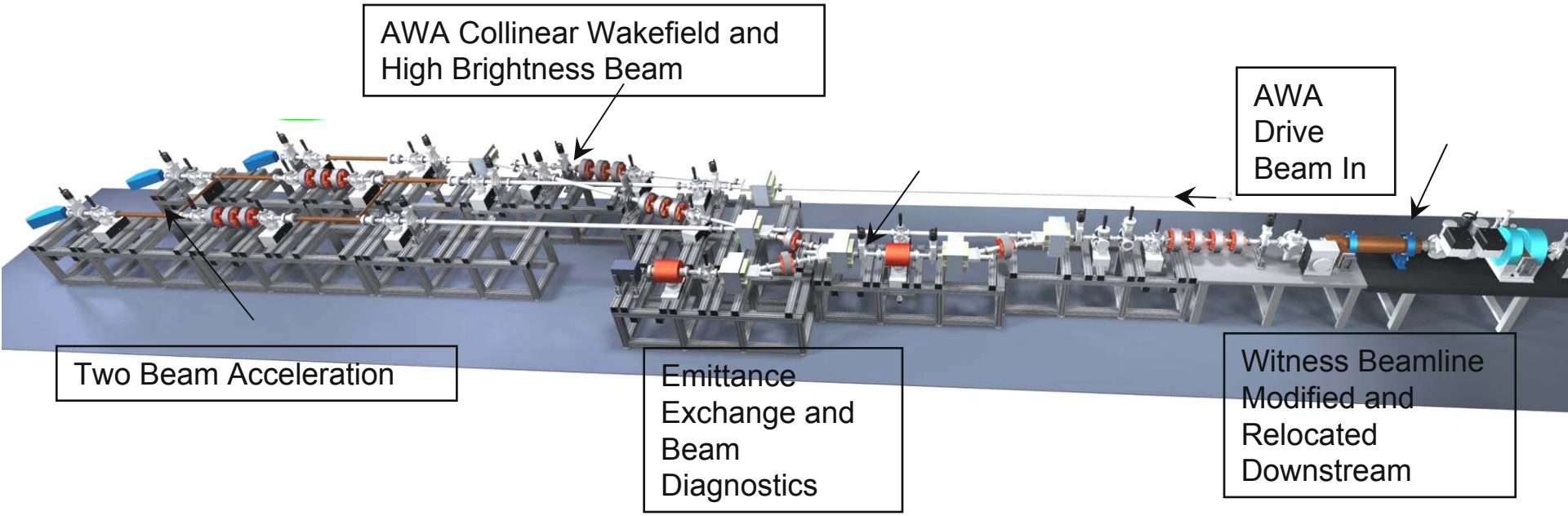

What we could do with the 75 MeV drive beam:

- Higher gradient excitation: ~ 0.5 – 1 GV/m in structures (~ 3 mm apertures)
  - Current: 100 MV/m

- Higher RF power extraction: ~ GW level (75 MeV, 130 Amps, 10 ns, 10 GW beam power)
  - Current: ~ 100 MW.

The beam energy will be up to 75 MeV in a few years

- Thanks for DOE support, we will able to upgrade the facility to 75 MeV
  - Two additional Klystrons and associated RF components.
  - 5 Additional Linac Tanks
  - Reconfigured Tunnel and Beamlines

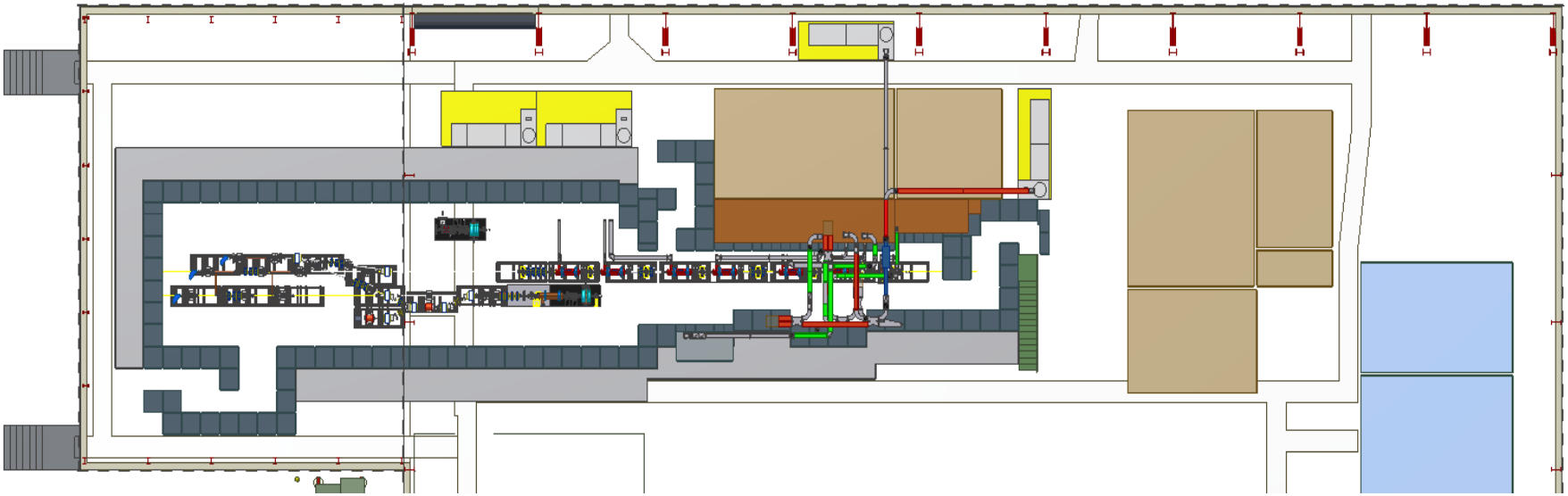

The AWA Upgrade Plan

AWA - Project Update
Building 366 Expansion

- Building 366 Proposed Expansion

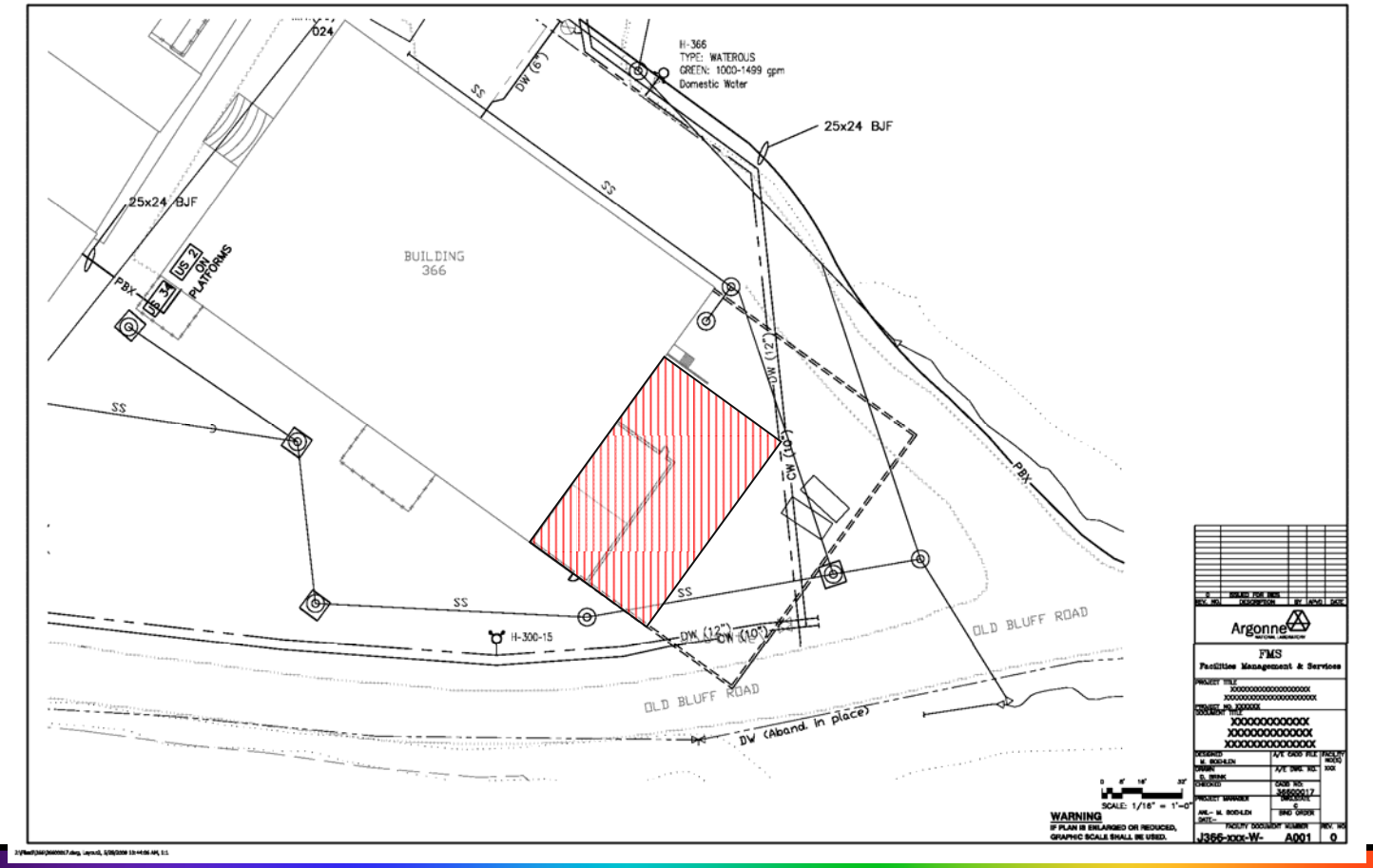

AWA - Project Update
Building 366 Expansion

- Building 366 Proposed Expansion

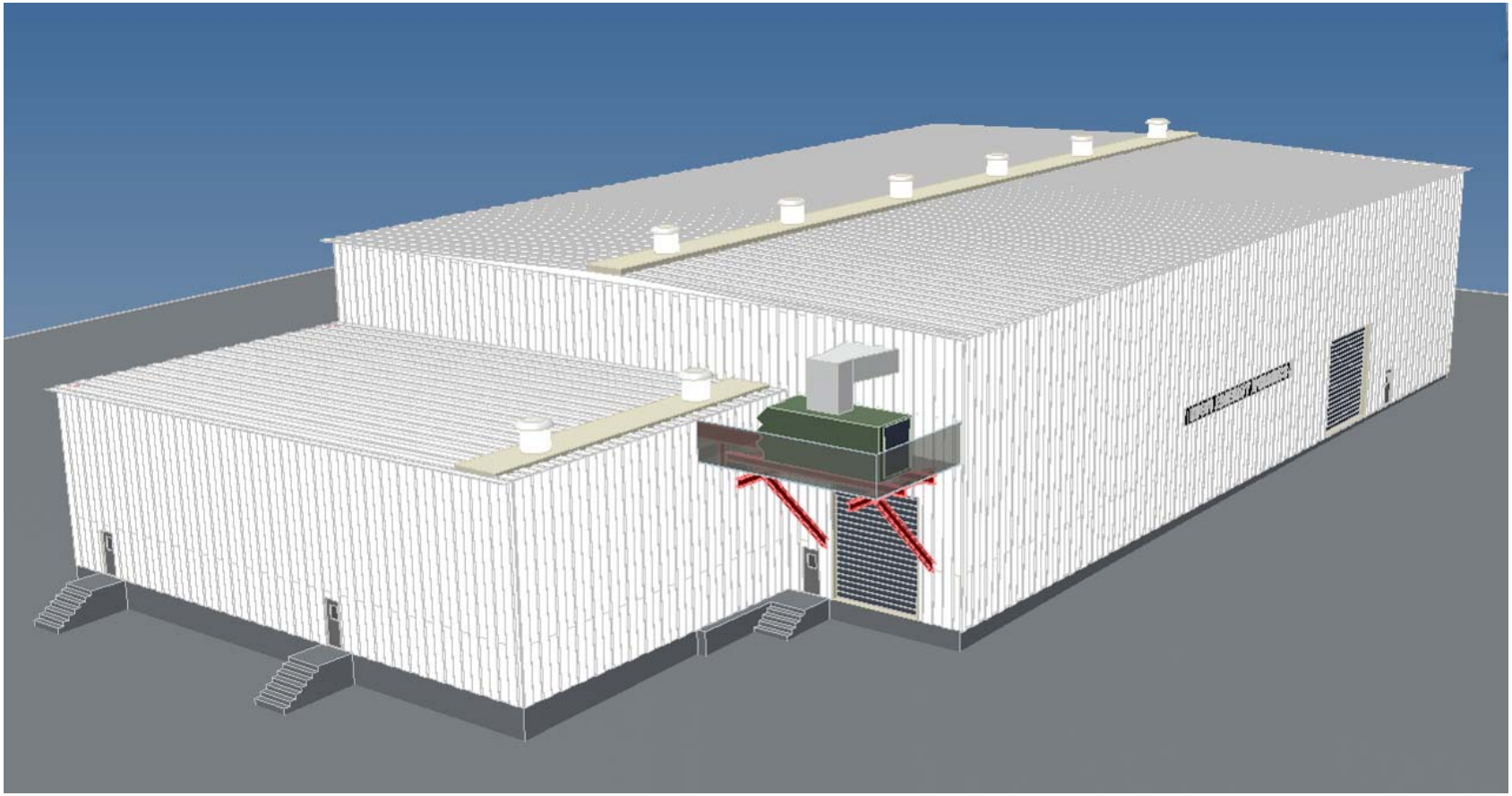

AWA - Project Update
New LINAC

- AWA New LINAC
- 1.3 GHz, 10 Megawatt, L-Band LINAC
- Field Distribution (SLAC)

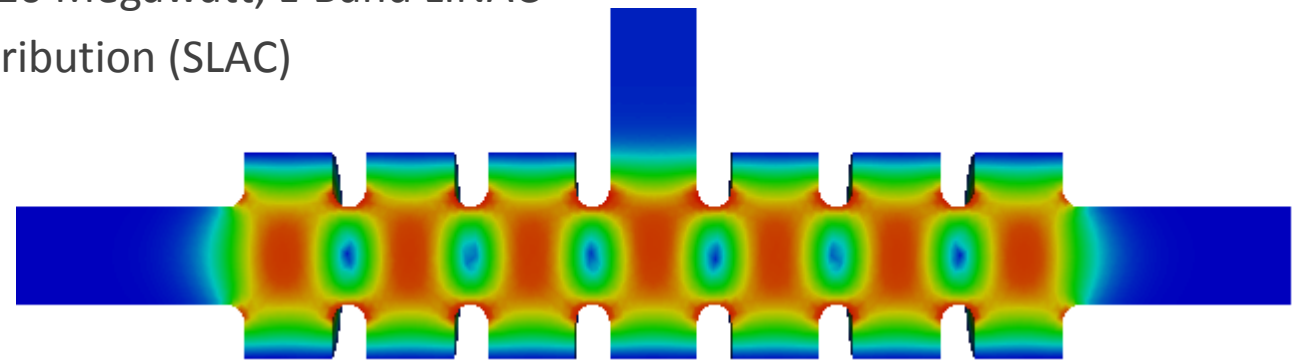

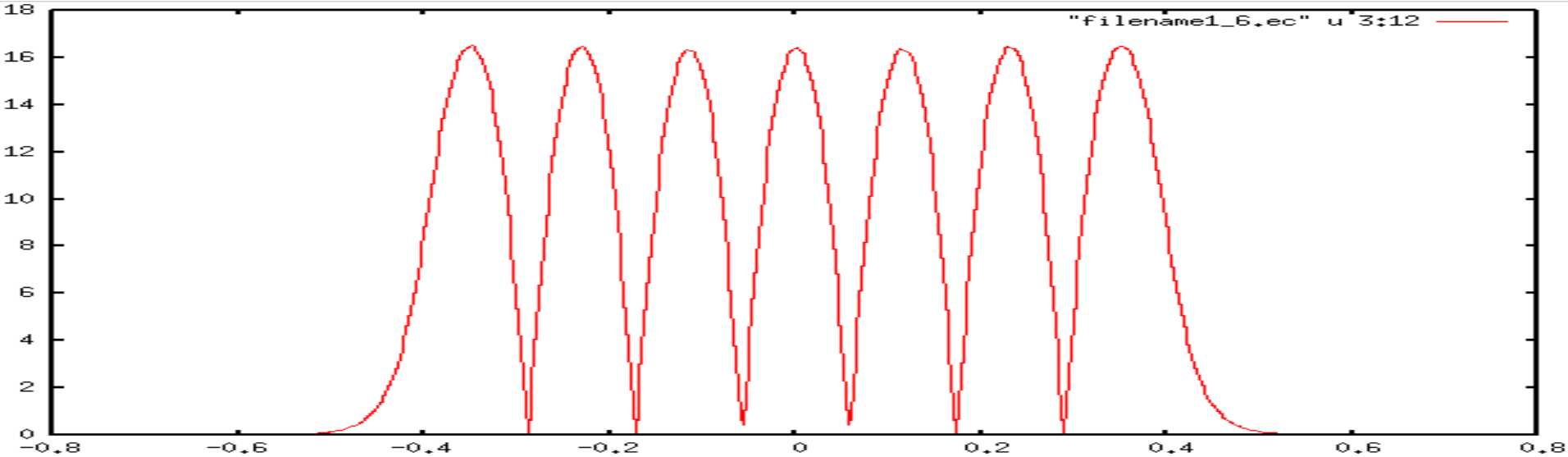

AWA - Project Update
New LINAC

- AWA New LINAC (x6)
- Mechanical Design (ANL, SLAC)
- OFE Copper C10100 Class 1
- Stainless Steel Ports
- Brazed Assembly
  - Copper/Gold Braze Material on Vacuum Joints.
- Exterior Cooling
- Push-Pull Tuning
- Vendors Considered
  - Hi-Tech
  - Meyer Tool
  - M1 Tool Works
  - Altair
  - California Braze

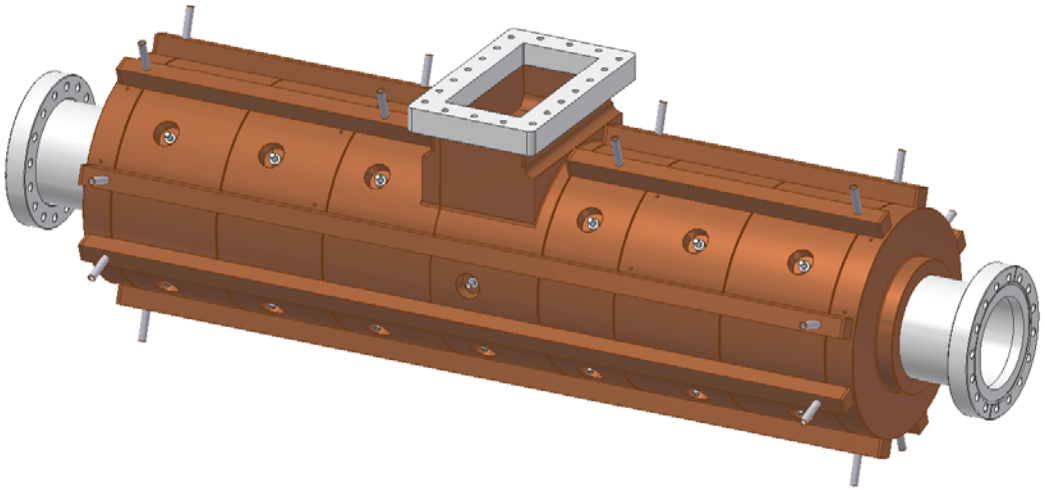

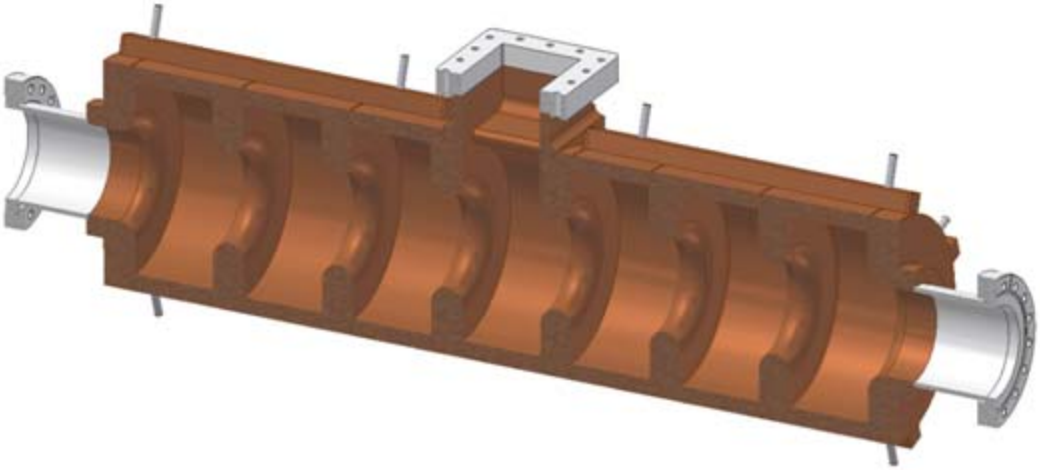

AWA new beamline studies

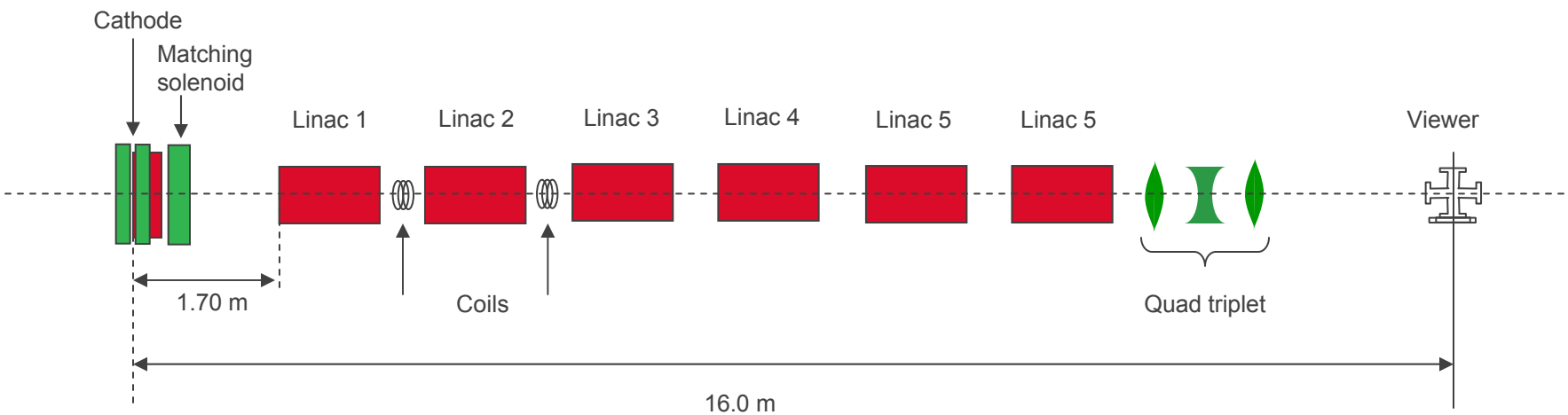

Beam parameters:

- Q = 40 nC
- R (at cathode) = 5.48 mm
- σ_z = 3.40 ps

Photoinjector parameters:

- Bucking-Focusing solenoid: 539 A
- Matching solenoid: 305 A (nominal)
- Egun-peak = 80 MV/m
- Elinac-peak (1 to 6) = 28.6 MV/m
- Gun phase: maximum energy gain
- Linacs' phases: maximum energy gain

Beam moments for the focused beam

SC only (wf not included)

Beam parameters:

- Q = 40 nC
- R (at cathode) = 5.48 mm
- σ_z = 3.40 ps

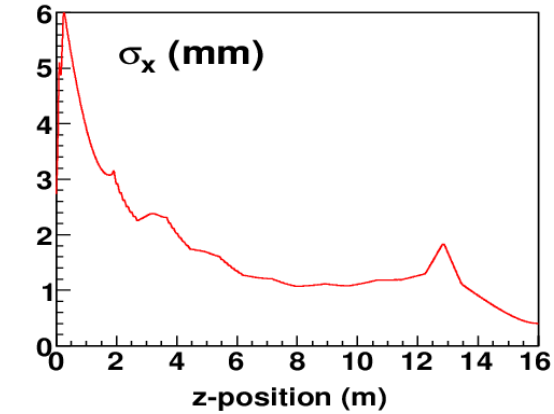

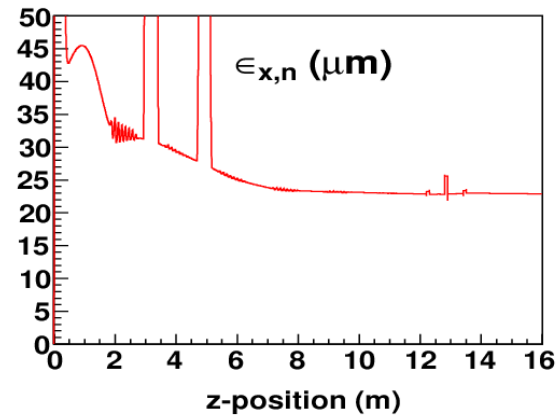

Typical values (Q = 40 nC) without extra focusing:

- $\varepsilon_x \approx 22$ μm
- $\delta E \approx 200$ keV
- $\sigma_x \approx 1$ mm
- $\sigma_z \approx 2$ mm

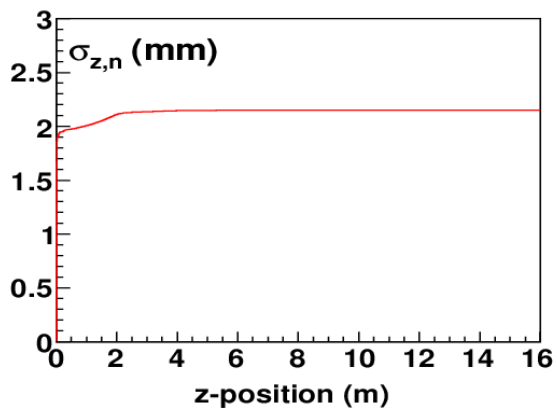

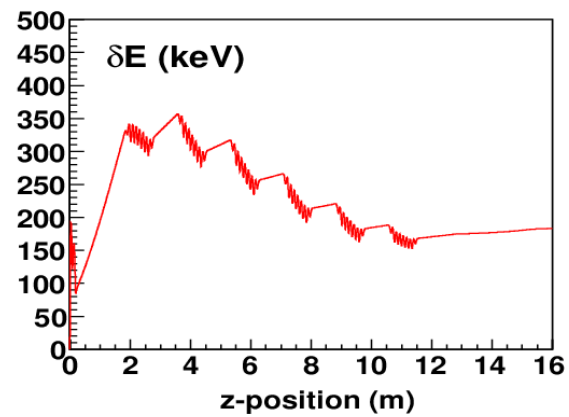

With extra focusing (3 quads and 2 coils) : $\sigma_x \approx$ **300 μm**.

Focus the beam at z = 16.0 m from cathode

- Set the matching solenoid such that ε_x is minimum and use the 2 coils and the 3 quads to minimize $\sigma_{x,y}$. (Sol1 = 69 A; Sol2 = 65 A; Q1 = 1.5 T/m; Q2 = -3.0 T/m; Q3 = 1.9 T/m)
- Quads: standard AWA (max gradient = 3 T/m).
- Solenoids: 3 Yale coils (Imax = 100 A).

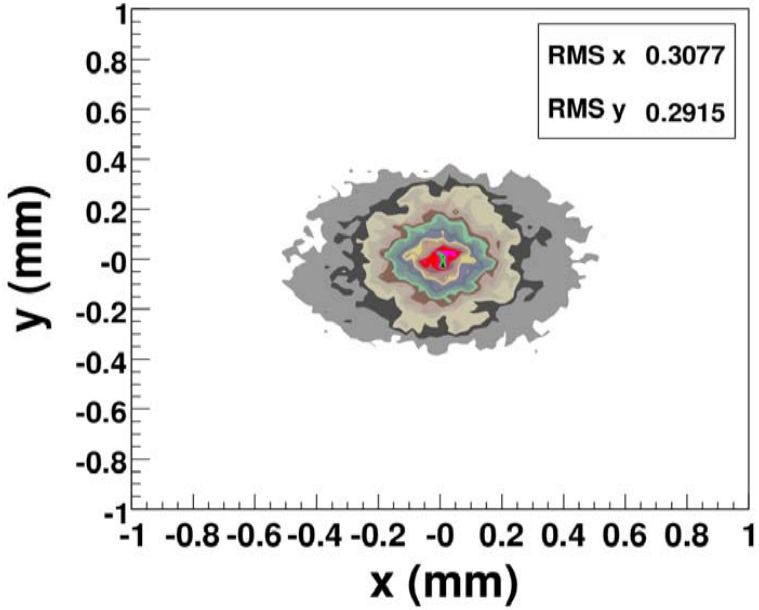

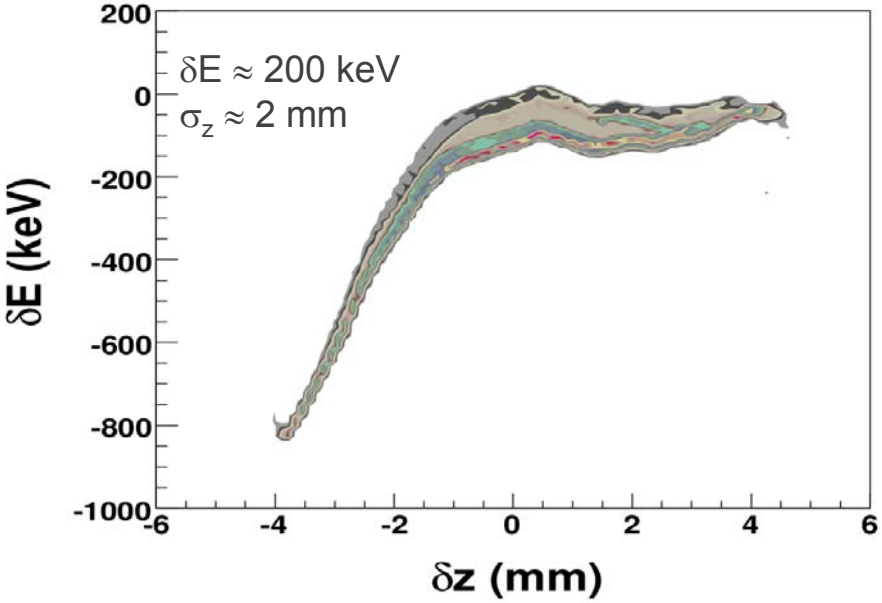

Wakefields effect on beam moments

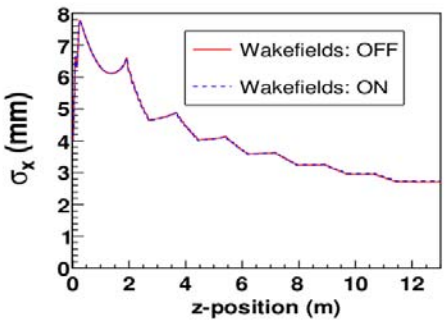

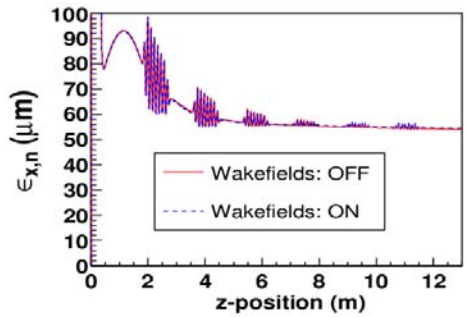

Beam parameters:

Q = 100 nC
R (at cathode) = 8.0 mm
σ_z = 3.40 ps

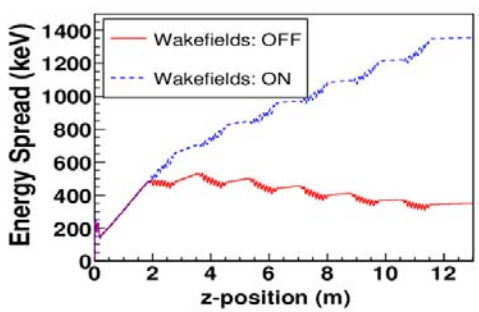

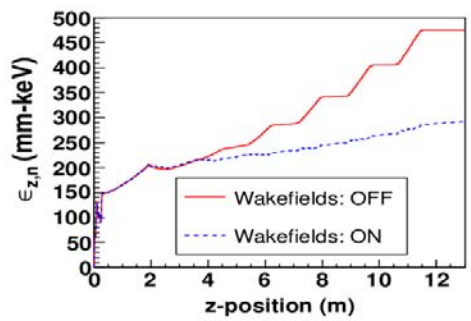

Wakefields:

- little effect on transverse phase-space and correlated energy spread.
- increase correlated energy spread.
- decrease longitudinal emittance.

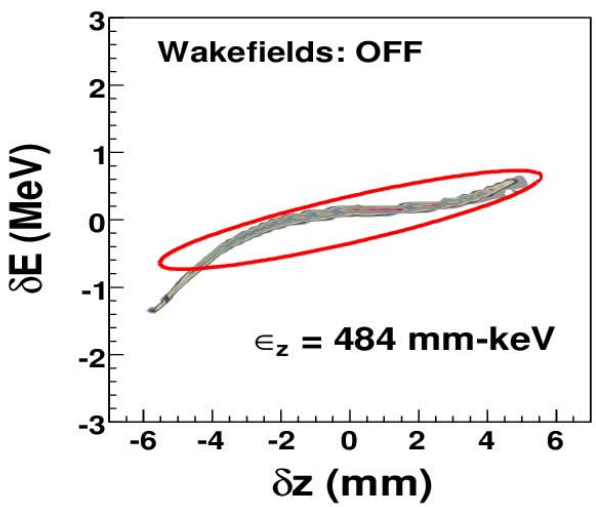

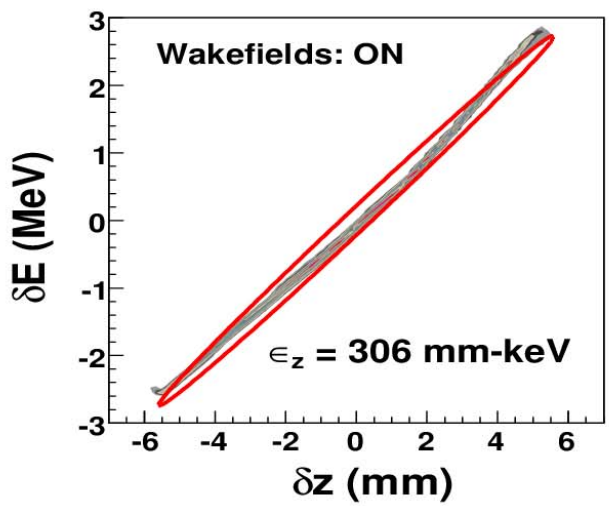

Impact-T implementation of the wakefields based on:

K. L. F. Bane, SLAC-PUB-9663, 2003

Energy spread can be lowered when one (or more tanks) are operated off-crest

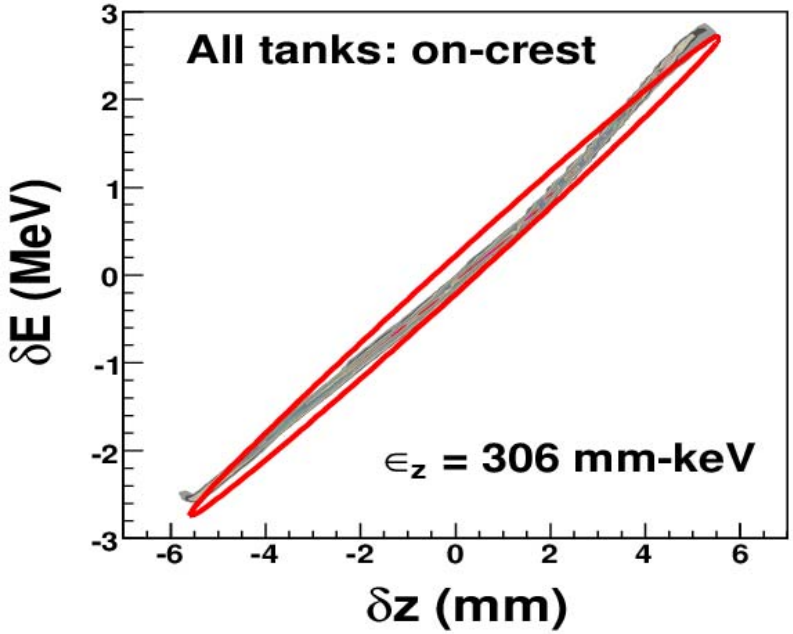

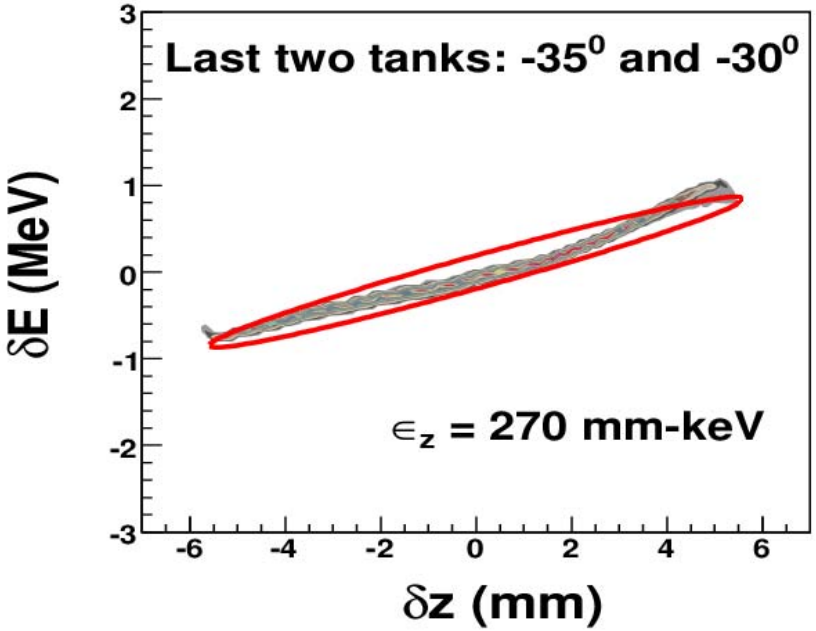

Cost: total energy gain is lowered by ≈ 3.6 MeV (5%).

Wakefields effect on beam moments (2)

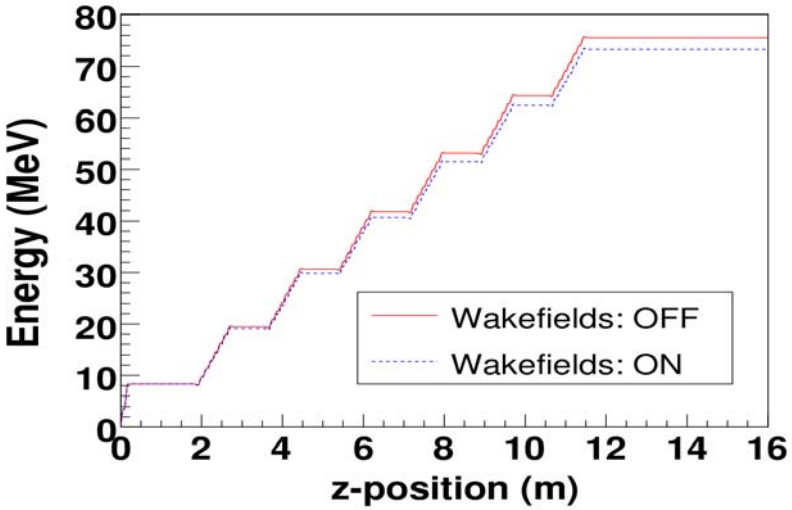

Q = 100 nC
R (at cathode) = 8.0 mm
σ_z = 3.40 ps

Q-dependence of transverse emittance

R (at cathode) = 8.0 mm
σ_z = 3.40 ps

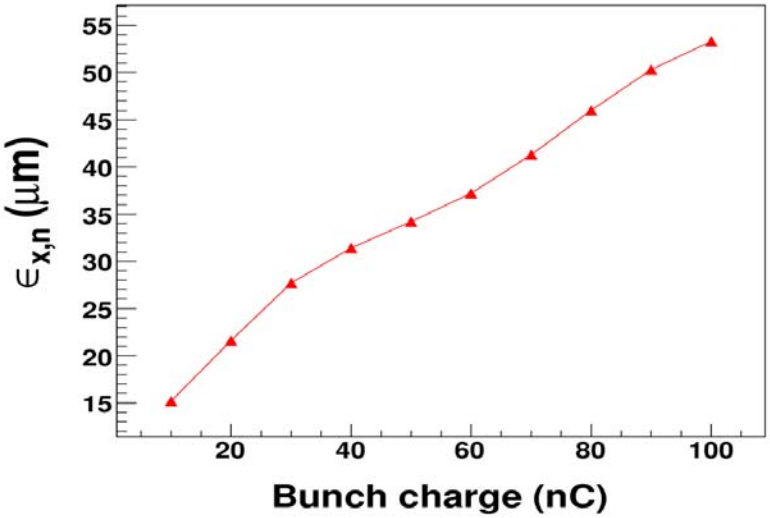

Beam Loading Effects

Wakefields: ON

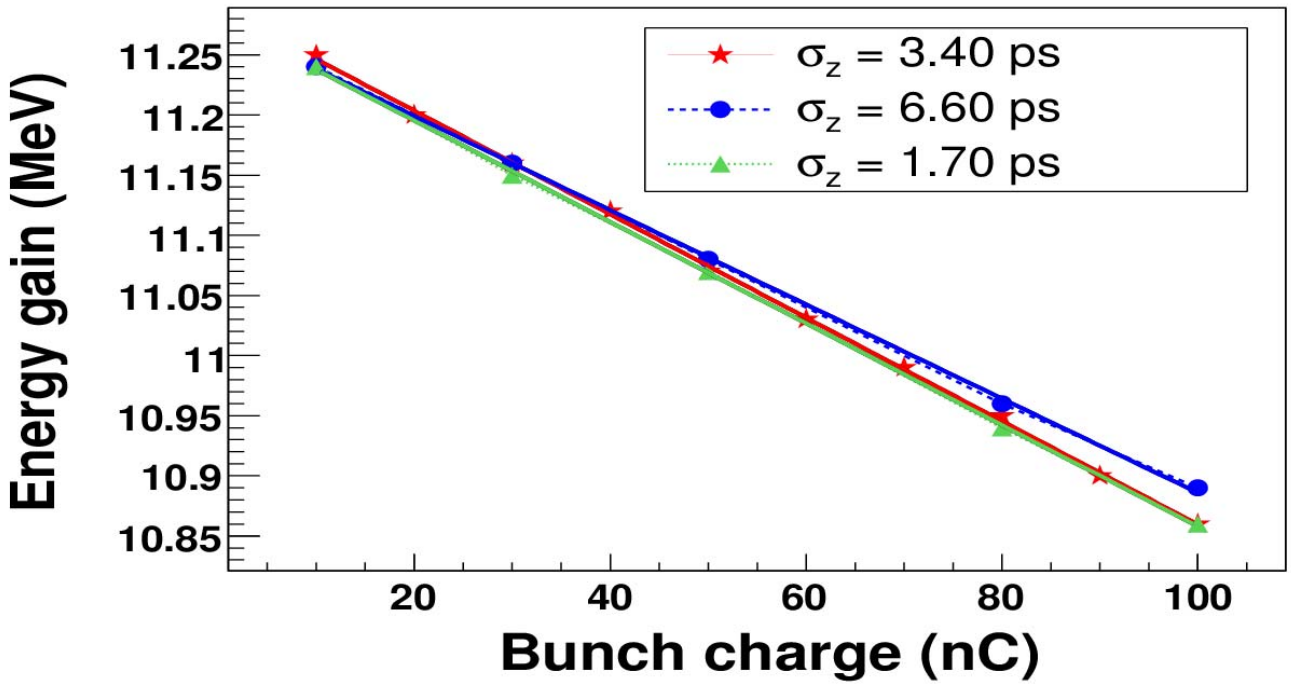

Q = 100 nC (I = 130A) ⟹ **Energy gain lower by ≈ 3.5% (420 keV)**

Energy loss due to wakefields is not sensitive on bunch length in the range of several picoseconds..

Realistic case: trains of bunches (~ 10) separated by $T_{RF} \approx 1$ns

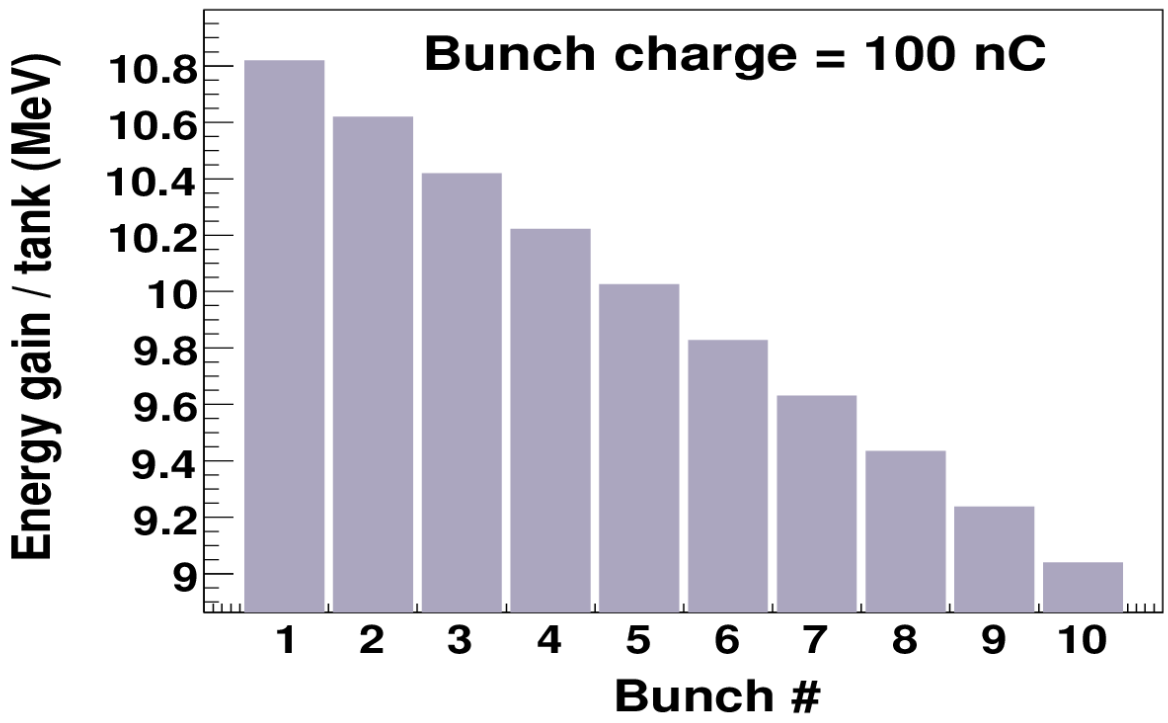

- Energy gain / tank higher by about 16% for 1st bunch compared with 10th bunch.
- Total energy transferred to beam: ≈ 9.93 J (initial stored energy: ≈ 30 J)

Modulators and Klystrons (under construction)

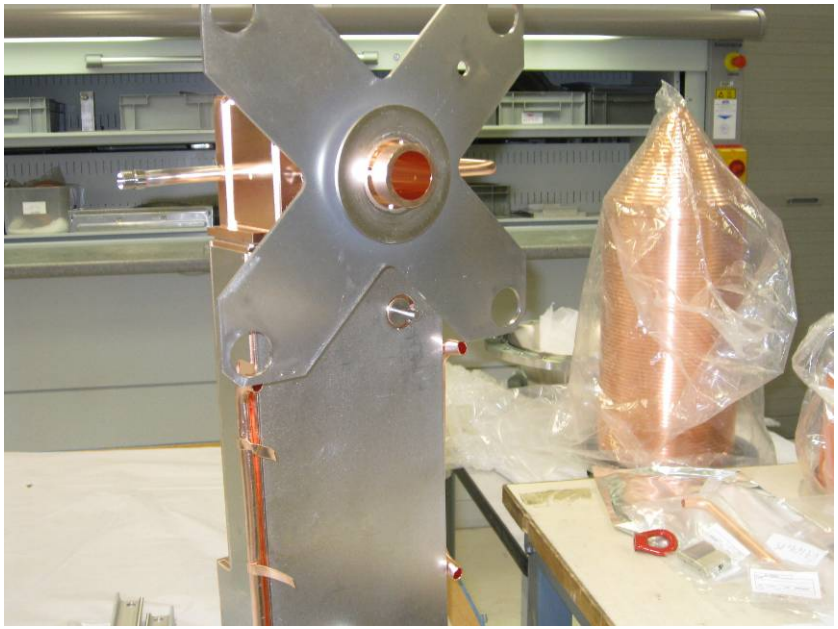

- To be completed/delivered this fall.

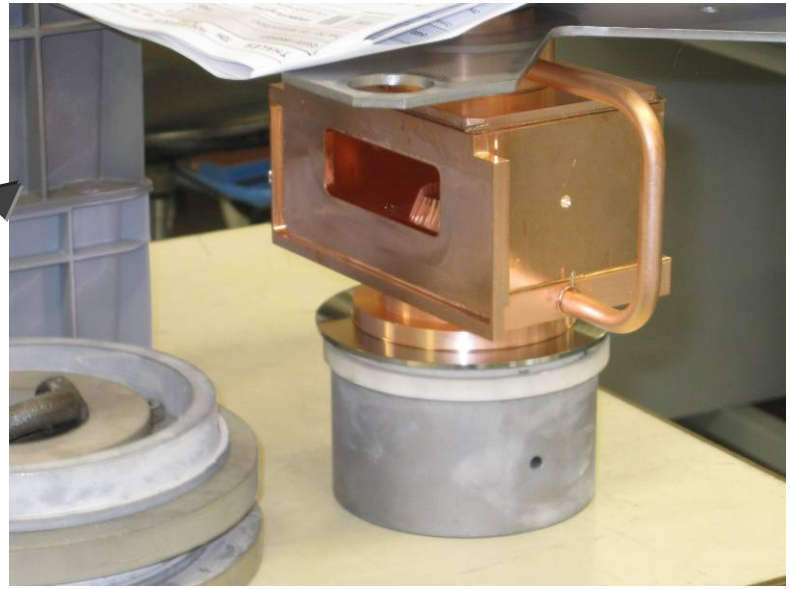

From Ali Nassiri

The AWA Upgrade

Goal: Increase the reach of the AWA facility

- Present: 100 MV/m & 100 MW scale
- Upgrade: 1 GV/m & 1 GW scale

Strategy: Increase the drive beam energy 15 MeV → 75 MeV

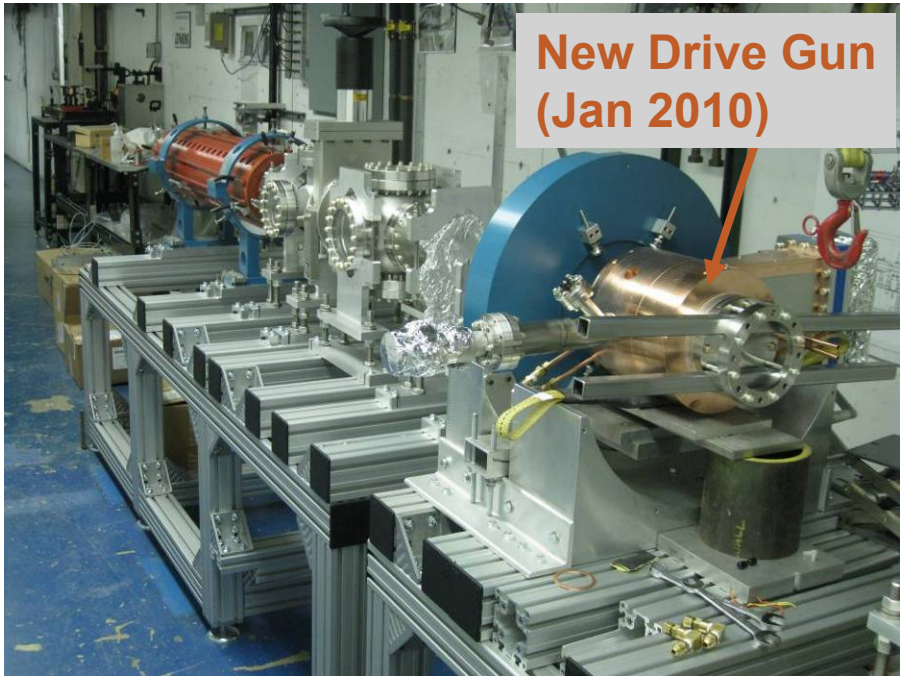

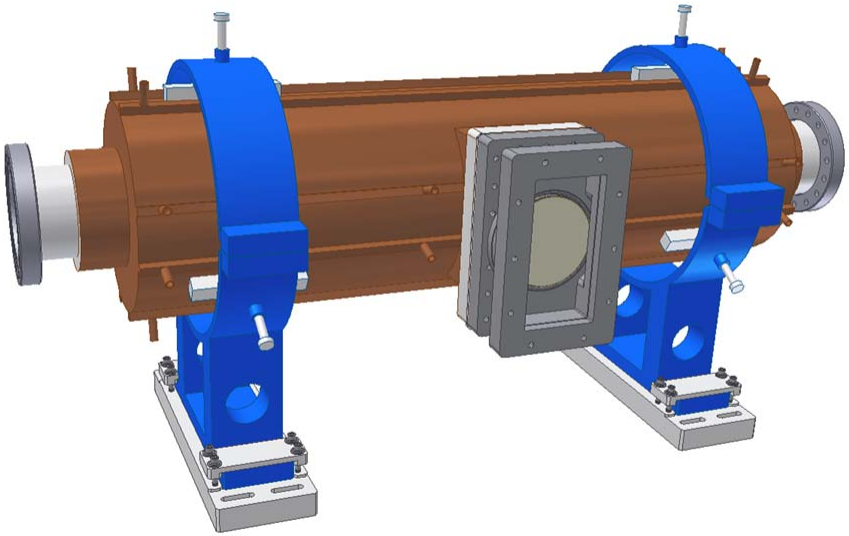

Progress based on additional DOE funding

1. AWA Facility Bunker Expansion
2. Design and Fabricate 6 new LINACs (RFQ's sent Feb 2010)
3. Purchase 2 new Klystrons & Modulators (ordered Summer 2009)

The Goal is to increase the reach of the AWA facility

Cesium Telluride Photocathode

- Quantum efficiencies of a few percent (13% max) are achieved routinely; need 0.5%,.
- Still working on improving the QE uniformity across the cathode surface.
- Transport system from preparation chamber to RF gun is basically ready.

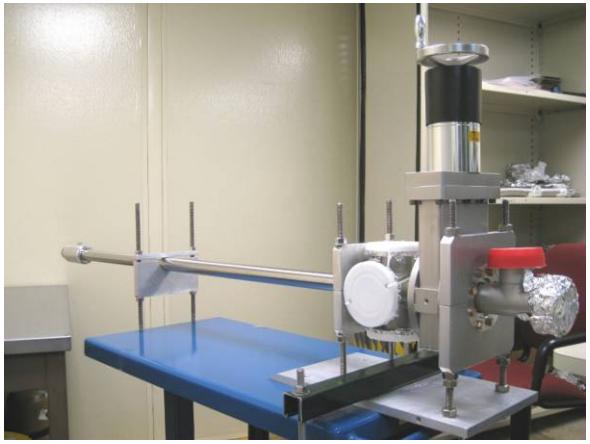

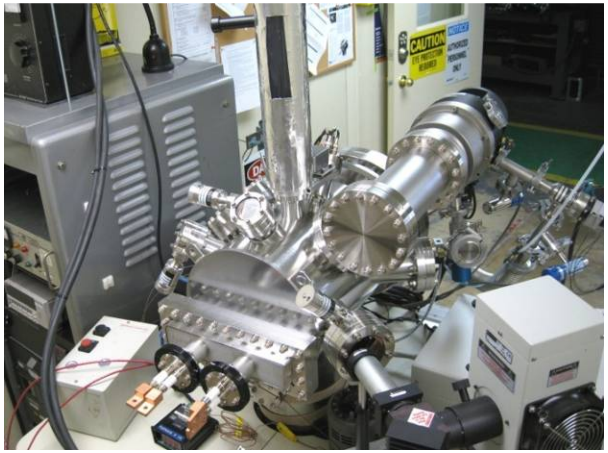

Zeke reported this last week

Major deliverables in the next three years:

- Complete the RF upgrade and deliver the 20 MW RF power to the bunker (done)
- Install and commission the Cs_2Te RF photocathode gun, initial beam testing for the high current beam (ongoing)
- Construct two new RF modulators (2010), install two klystrons and associate RF components (2011).
- Expand bunker (2010)
- Design, fabricate and install the 6 additional L-band tanks (2010-2011).
- Generate and characterize the high current beam to 25 MeV. Then 75 MeV (2009 – 2010 – 2012).
- Starting high gradient wakefield (~ 500 MV/m) experiments using high charge bunch train. (2012).
- Demonstrate high RF power (~ GW) extraction experiments. (2011-2012)

Undulator Based Positron Source for CLIC (official CLIC Collaboration Member)

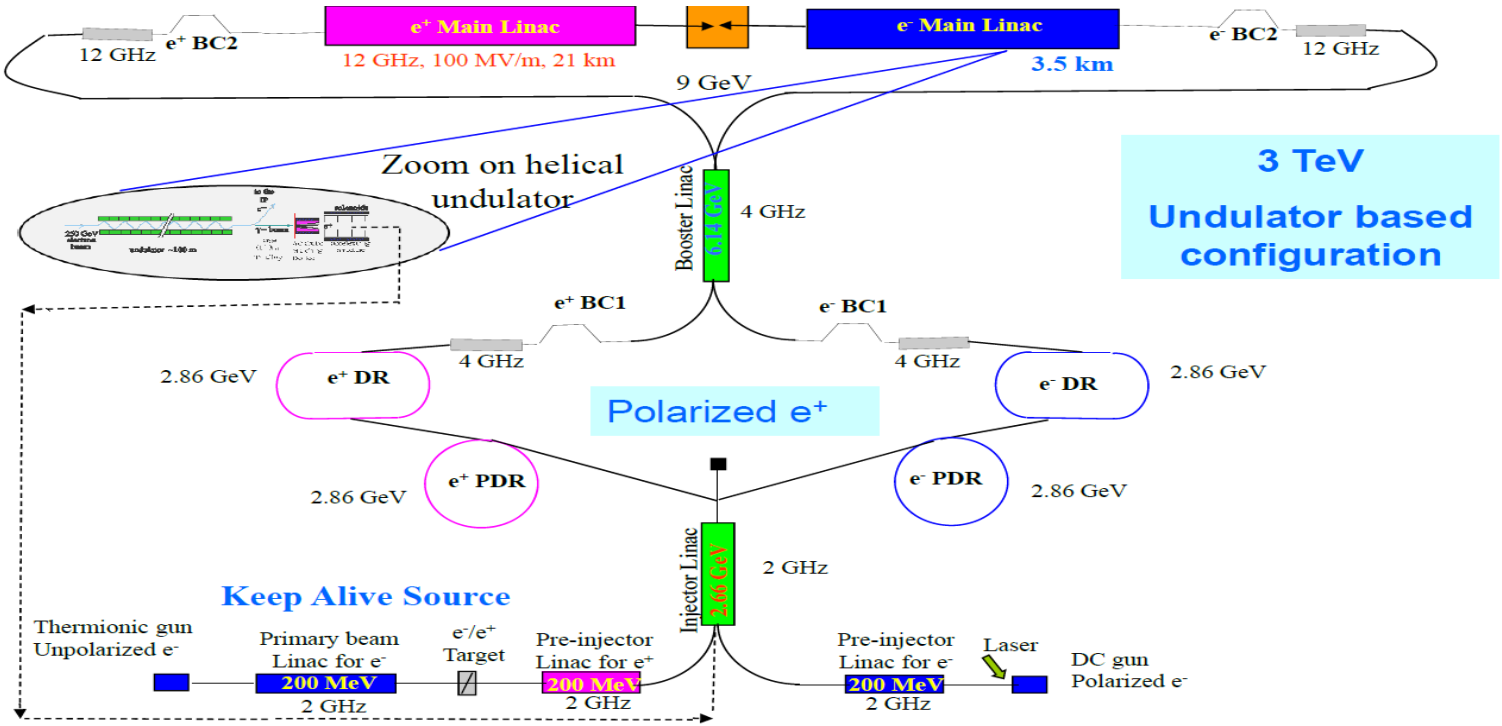

- We study
  - Alternative e+ source, undulator based positron source.
  - Effect of undulator to the drive beam emittance.
  - Correlation between yield and polarization for this undulator.
  - Overall CLIC complex layout with undulator based e+ source.

Summary:

- Wakefield acceleration → a path toward future HEP colliders.
  - A dedicated high charge facility constructed to study the beam-structure interactions
  - Many experiments performed, systematically achieving 50 – 100 MV/m and short RF pulses at ~ 50 MW.
  - Further experiments planned with the upgraded facility, using multiple beam, we are expecting higher gradients (~ 200 - 500 MV/m) and power (~ GW MW) for short pulses.
  - Demonstrate our WF technology that could lead to future HEP LC.
- Serving HEP communities.