Argonne NATIONAL LABORATORY

Beams and Applications Seminar

Efficiency and Intensity Upgrade of the ATLAS Facility

P.N. Ostroumov

May 7, 2010

U.S. DEPARTMENT OF ENERGY

Content

- Short description of ATLAS
- Recent upgrades
  - Energy Upgrade Cryomodule
  - CARIBU
- ATLAS Efficiency and Intensity Upgrade, Phase I
  - Beam Intensity limitations in the ATLAS
  - Description and Layout of the Phase I Upgrade
- CW Radio Frequency Quadrupole (RFQ) development
- New Low-beta Cryomodule Development
- Charge Breeder for CARIBU based on Electron Beam Ion Source
- ATLAS Efficiency and Intensity Upgrade, Phase II Proposal

Argonne Tandem Linac Accelerator System (ATLAS)

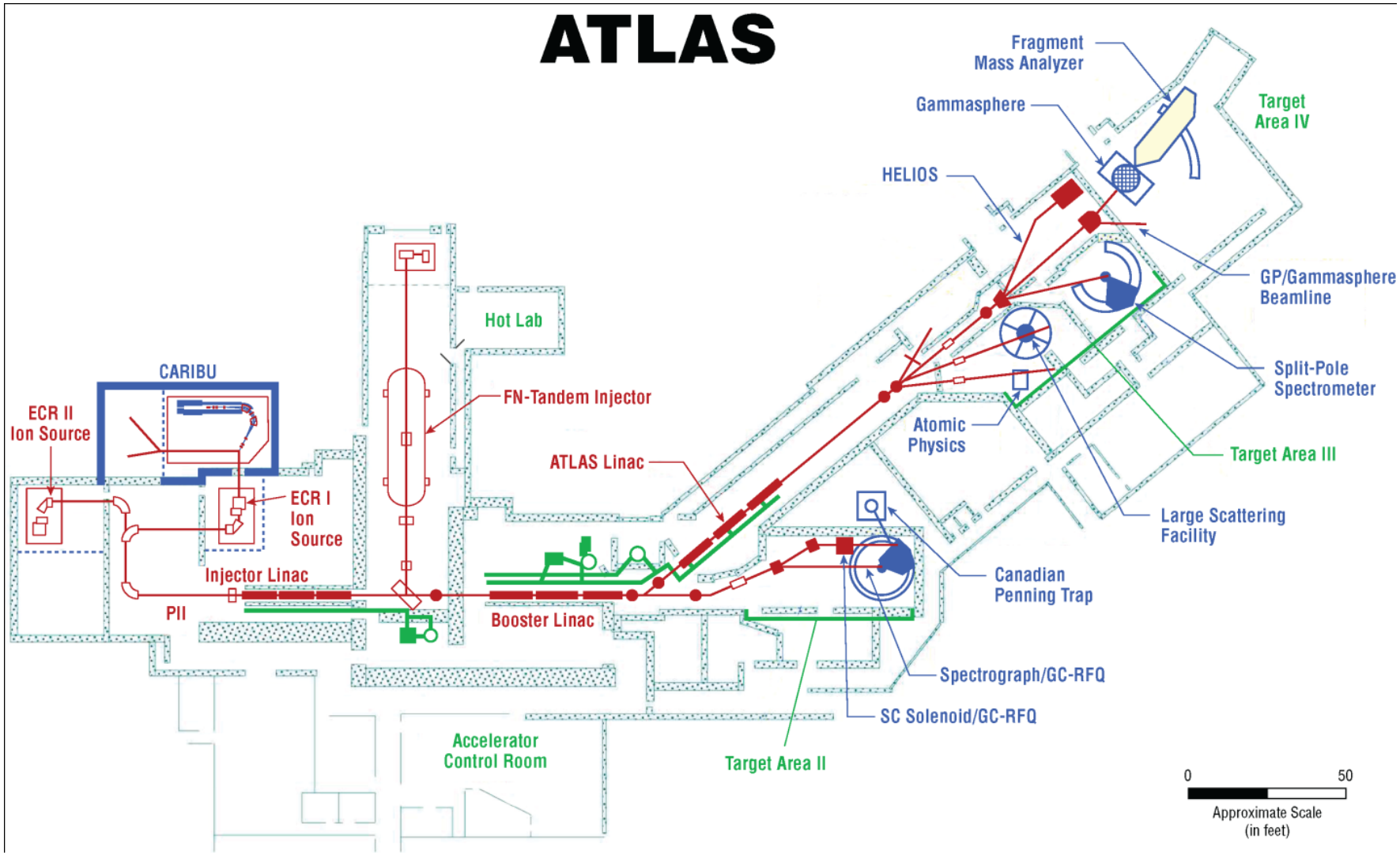

Beams in FY09

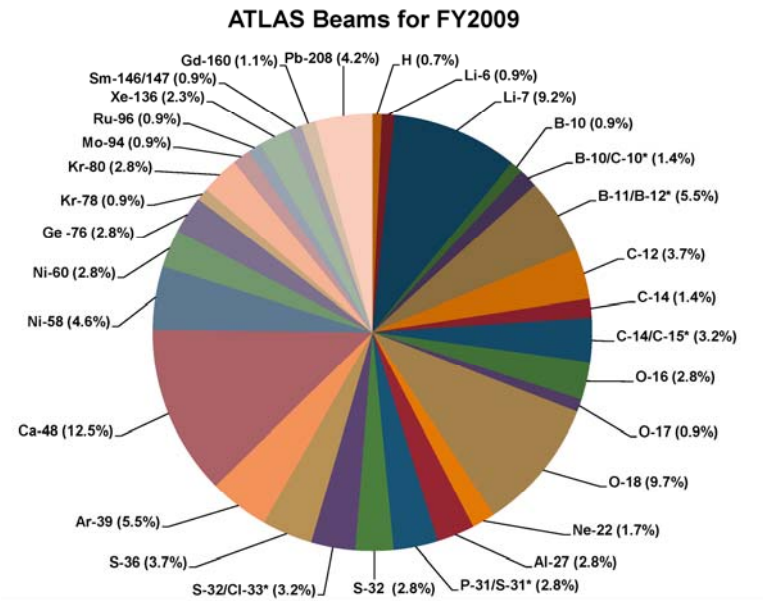

Ion	Energy Range Provided (MeV)	Maximum Beam Current Used (pnA)	Routine Max. Energy (MeV)
p†	2-8	64	>25
^{6}Li†	25-45	3	130
^{7}Li†	5-96	83	150
^{9}Be†	126	1	195
^{10}B†	32-120	15	210
^{11}B†	40-120	105	230
^{12}C	33-240	60	240
^{13}C §	25-95	6	240
^{14}C §	133	.4	240
^{14}N	25-170	100	260
^{15}N §	25-85	150	300
^{16}O	26-200	136	320
^{17}O §	80-150	63	340
^{18}O §	20-156	43	360
^{19}F	100-130	80	360
^{20}Ne	32	43	380
^{21}Ne §	51-80	5	400
^{24}Mg	6-100	71	480
^{26}Mg §	120-140	3	490
^{27}Al	45-350	60	540
^{28}Si	40-400	81	550
^{29}Si §	280-400	0.6	550
^{30}Si §	149-155	3	570
^{31}P	350	.1	590
^{32}S	80-360	75	590
^{33}S §	300-350	.48	590
^{36}S §	155-250	2	590
^{35}Cl	360	7	630
^{37}Cl	160-180	2	660
^{36}Ar §	80-220	53	650
^{40}Ar	140-180	4	720
^{40}Ca	80-240	91	720
^{48}Ca §	85-330	110	840
^{47}Ti	295-315	.2	820
^{50}Ti	200-250	283	880
^{50}Cr	200-250	9	880
^{51}V	230-240	2	890

	Provided (MeV)	Current Used (pnA)	Energy (MeV)
^{54}Fe	165-220	19	900
^{57}Fe§	500	.2	960
^{58}Ni	182-600	69	975
^{60}Ni§	180-260	66	1000
^{64}Ni §	350-450	.7	1050
^{66}Zn	363	.5	1100
^{76}Ge	425-530	.6	1210
^{78}Kr §	464	6	1240
^{80}Kr	400-850	2.5	1280
^{82}Kr	861	.3	1310
^{86}Kr §	50-170	52	1375
^{82}Se	350-390	8	1310
^{90}Zr	360-400	18	1350
^{92}Zr	380-420	15	1380
^{94}Zr	360-430	11	1410
^{96}Zr §	320-430	2	1440
^{98}Mo	912	1.6	1470
^{96}Ru §	275	1.5	1440
^{102}Ru	1025	.6	1530
^{116}Sn §	800	1	1680
^{124}Xe §	380-435	5	1730
^{126}Xe §	167-420	4	1760
^{128}Xe §	380-420	4	1790
^{130}Xe §	380-420	4	1820
^{132}Xe	585-648	7.5	1300
^{136}Xe	380-1360	2	1900
^{138}Ce	480-490	1	1930
^{147}Sm	400-850	2	1985
^{148}Sm	660	1.5	1985
^{149}Sm	660	1.5	1985
^{152}Sm	400-915	1.3	1980
^{154}Sm	680-850	1.5	1980
^{168}Gd	960	34	2200
^{178}Hf	984-1150	1	2225
^{208}Pb	475-1460	.3	2390
^{209}Bi	1300-1500	.4	2390
^{238}U	1190	19	2600

§ Isotopically enriched material used in this case.

Californium Radioactive Ion Breeder Upgrade (CARIBU)

- Radioactive beam Intensity up to 10^7 ions/sec (^{104}Zr,^{143}Ba,^{145}Ba,^{130}Sn,^{132}Sn,^{110}Mo,^{111}Mo,….)

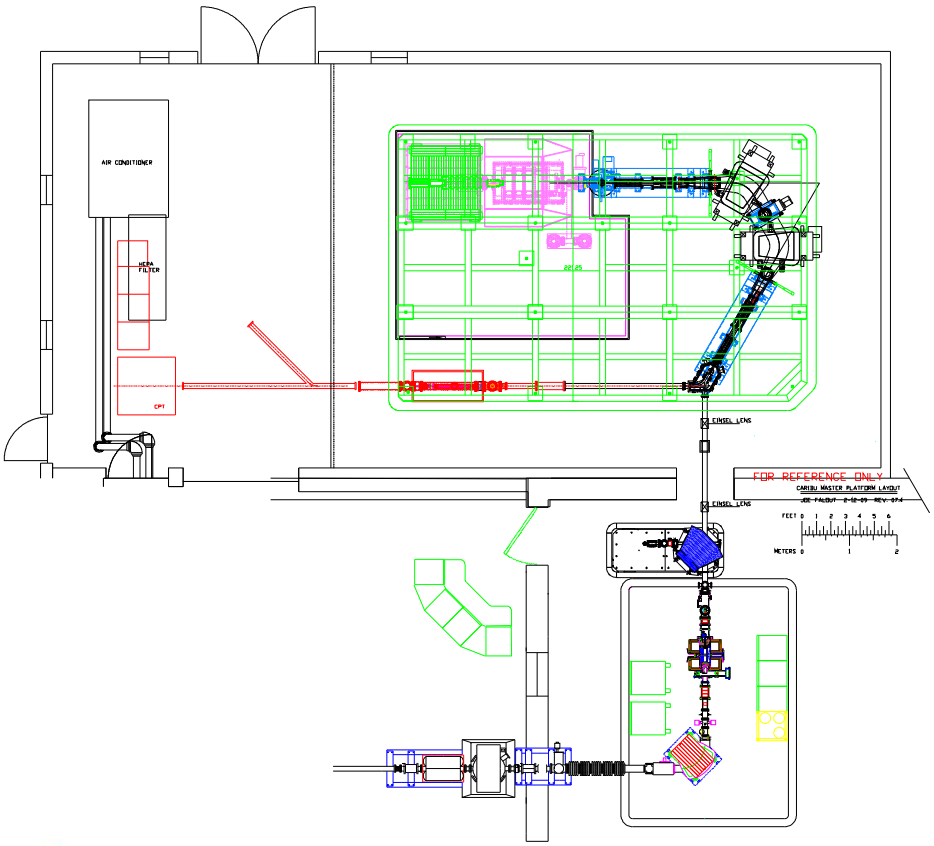

ATLAS Energy Upgrade

- 7 quarter wave SC resonators
- Innovative features
  - Advanced EM and Mech. design
  - Steering corrected drift-tubes
  - State-of-the-art surface processing and clean assembly
  - Separate cavity&cryostat vacuum
- ATLAS energy increase 30-40%
  - Highest real-estate gradient
- Limitation
  - VCX
  - Technology of QWR
  - B_peak=88 mT
- Commissioned –July 2010

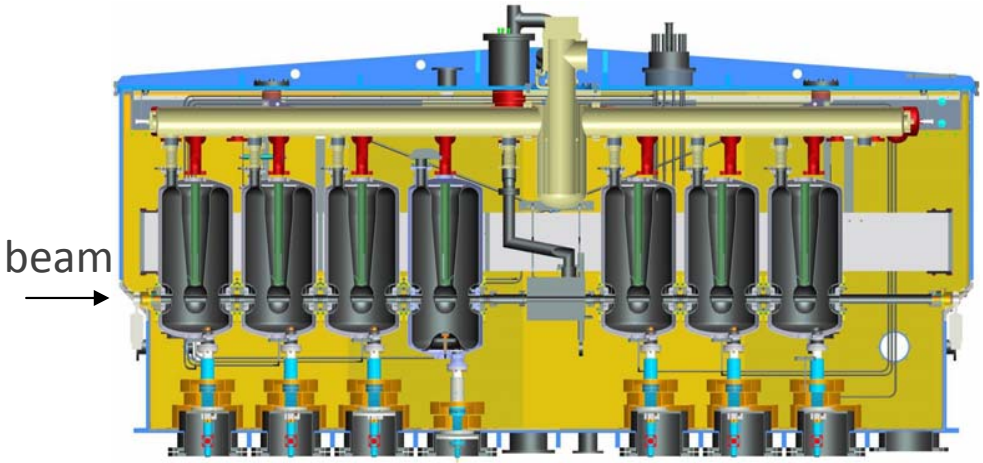

Efficiency and Intensity Limitations of the current ATLAS

- Previous generation ECR
- ECR charge breeder: low efficiency, long breeding time
- Low Energy Beam Transport: emittance growth, beam losses
- Multi-Harmonic Buncher
  - Low voltage, strong space charge effects
  - As a result not efficient for high current beams (>10 pμA)
- Low transverse acceptance of the first PII cryostat
  - The aperture diameter of the first cavity is 15 mm, the second cavity – 19 mm
  - The transverse acceptance is ~0.6 π mm-mrad, normalized
- Longitudinal emittance
  - Strong transverse-longitudinal coupling in the first cavities at high field
  - Non-adiabatic motion in the phase space, low acceptance, emittance growth for high-intensity beams and beam losses
- Beam steering in the split-ring cavities, especially for light ions
- No space to install in-flight separator
- RF system, Cryogenics, Radiation Shielding, Control system, Beam diagnostics

Scope of the ATLAS Efficiency and Intensity Upgrade projects Phase I (Funded) and Phase II (Proposal)

- Deliver ≥7 MeV/u high-intensity (~10 pμA) ion beams for experiments
- The maximum beam energy of medium intensity beams (~1 pμA) will be increased to ~11 MeV/u for A/q=7 without any additional stripping and to over 20 MeV/u for beams with A/q<3 (such as $^{40}Ar^{14+}$).
- Increase the efficiency of CARIBU charge breeding by using an EBIS.
- Increase the overall transmission of any ion beam, including CARIBU radioactive beams, to 80% of the intensity of DC beams from the source/breeder.
- Replace the ATLAS ECR-II ion source with a 'third generation' superconducting ECR source.
- Add new in-flight separator to produce high-intensity in-flight secondary beams
- Upgrade ATLAS technical systems (RF, Beam Instrumentation, Controls, ARIS) and radiation shielding to handle higher intensity beams

ATLAS Efficiency and Intensity Upgrade projects (Phase I)

- New 60.625 MHz CW RFQ, ARRA – $4.55M
- New cryomodule and LHe distribution system upgrade, ARRA – $5.31M
- EBIS Charge Breeder (AIP) - $2.4M (FY10 - $0.88M) - off-line constr. & testing
- ATLAS Utilities Upgrade (AIP) – $0.88M (FY10- $0.422M)

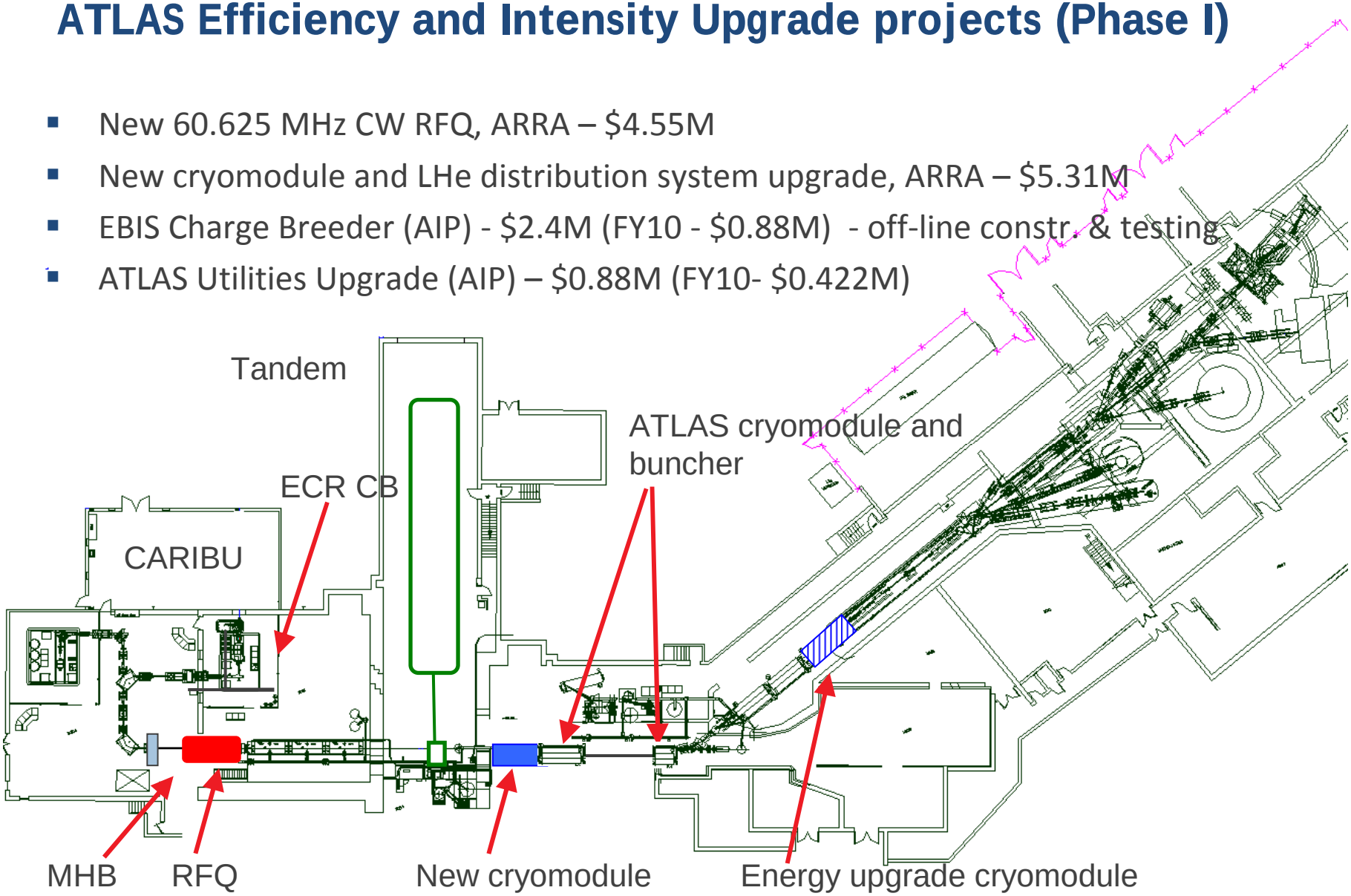

RFQ 101

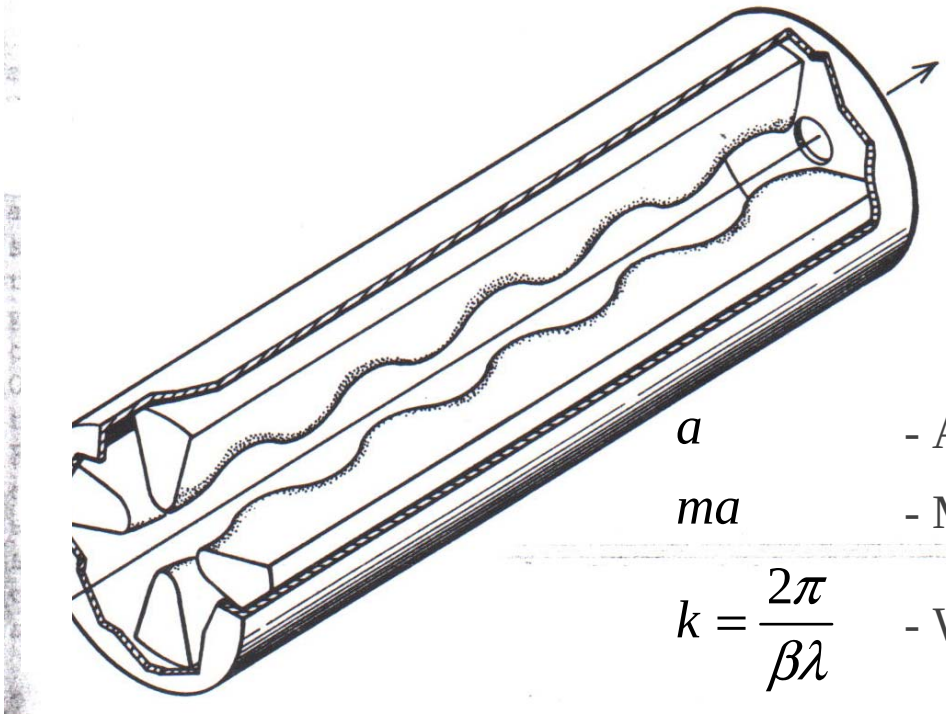

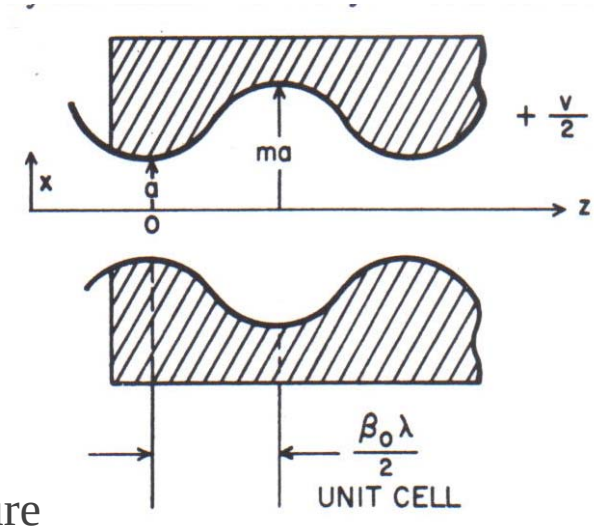

a - Aperture

ma - Maximum distance from axis to electrodes

$k = \dfrac{2\pi}{\beta\lambda}$ - Wave number

$R_0 = \dfrac{2a}{m+1}$ - Average distance from axis to electrodes

$L_c = \dfrac{\beta\lambda}{2}$ - Length of accelerating cell

RFQ studies, recent developments

- HINS (Project X) RFQ for FNAL
  - 325 MHz RFQ for protons and H-minus
- Design features
  - Produce axially-symmetric beam
  - Small longitudinal emittance
  - No emittance growth
  - Strong transverse focusing ($\sigma_0 \cong 43°$)
  - Limiting current 140 mA
  - Acceleration efficiency is 96 % for 45 mA
  - Short, 3 meters

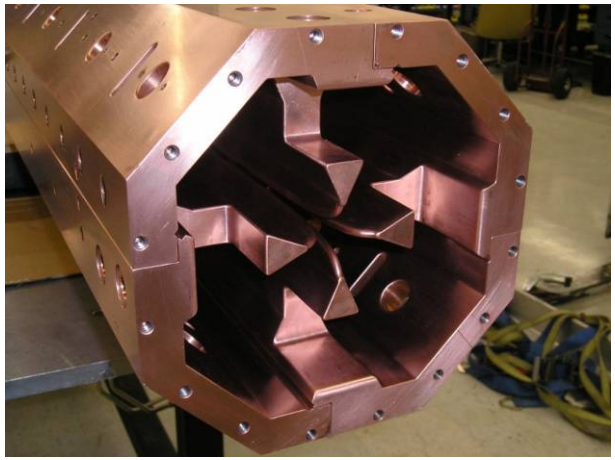

January 13, 2010

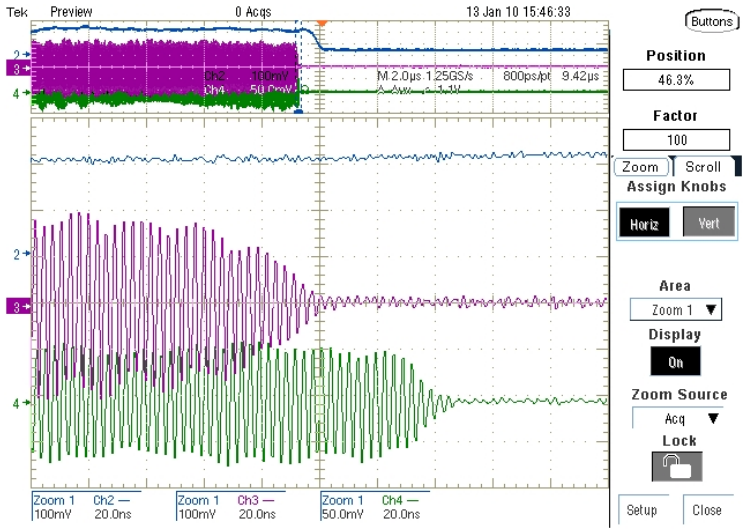

44 nsec time delay over 1 m corresponds to 2.5 MeV protons

ARRA RFQ Project

- CW regime of operation
- Any ions in the $1/7 \leq q/A \leq 1$ range
- Injection energy = 30 keV/u
- Extraction energy = 295 keV/u
- 60.625 MHz, 5th harmonic, 3.9-meter length
- 83 % efficiency of beam capture for acceleration
- Voltage 70 kV, R_0=7.2 mm
- OFE copper, high-temperature furnace brazing
- 50 kW RF power
- New features
  - Forms axially-symmetric beam
  - Very low longitudinal emittance
  - Increased efficiency of acceleration

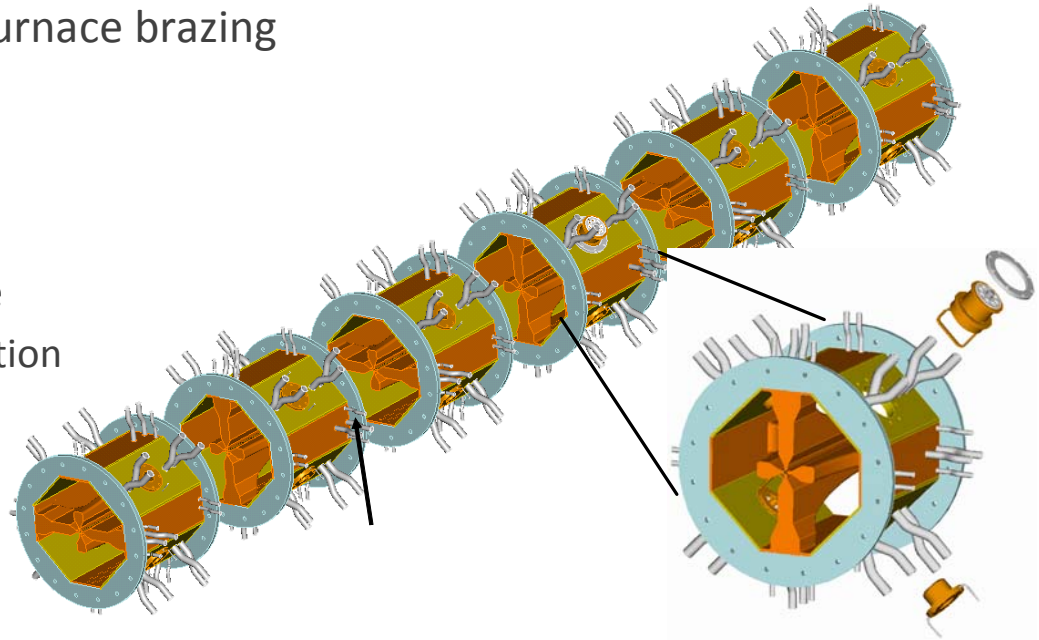

Electrodynamics design, MWS model

- Highly 3D structure, resonance frequency (f_0) is critical to geometry
- Verification of the simulated and measured f_0 of the RIA prototype RFQ
- Simulations: f_0 strongly depends from mesh number
- Copper Model measured frequency: f_0 = 55.852 MHz
- Copper Model calculated frequency: f_0 = 55.7257 MHz with 3M mesh points

Copper prototype

MWS model

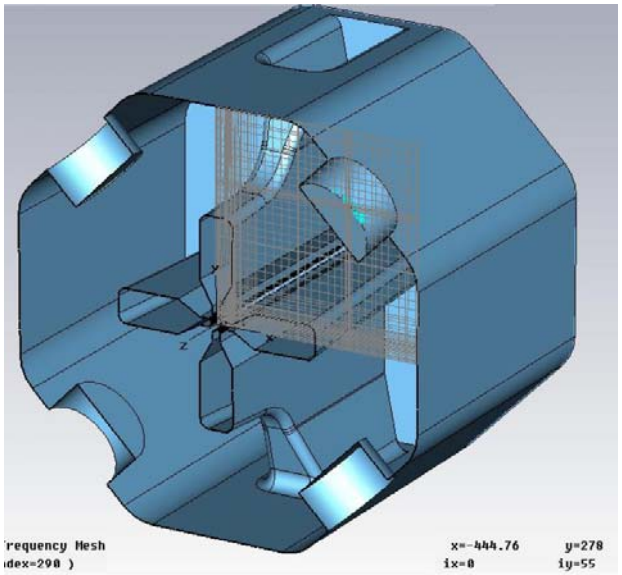

Six-segment RFQ structure, strongly coupled

- Frequency of operating mode 57.5 MHz
- Frequency of the first nearest mode 68.4 MHz
- Frequency of the second nearest mode 93.5 MHz

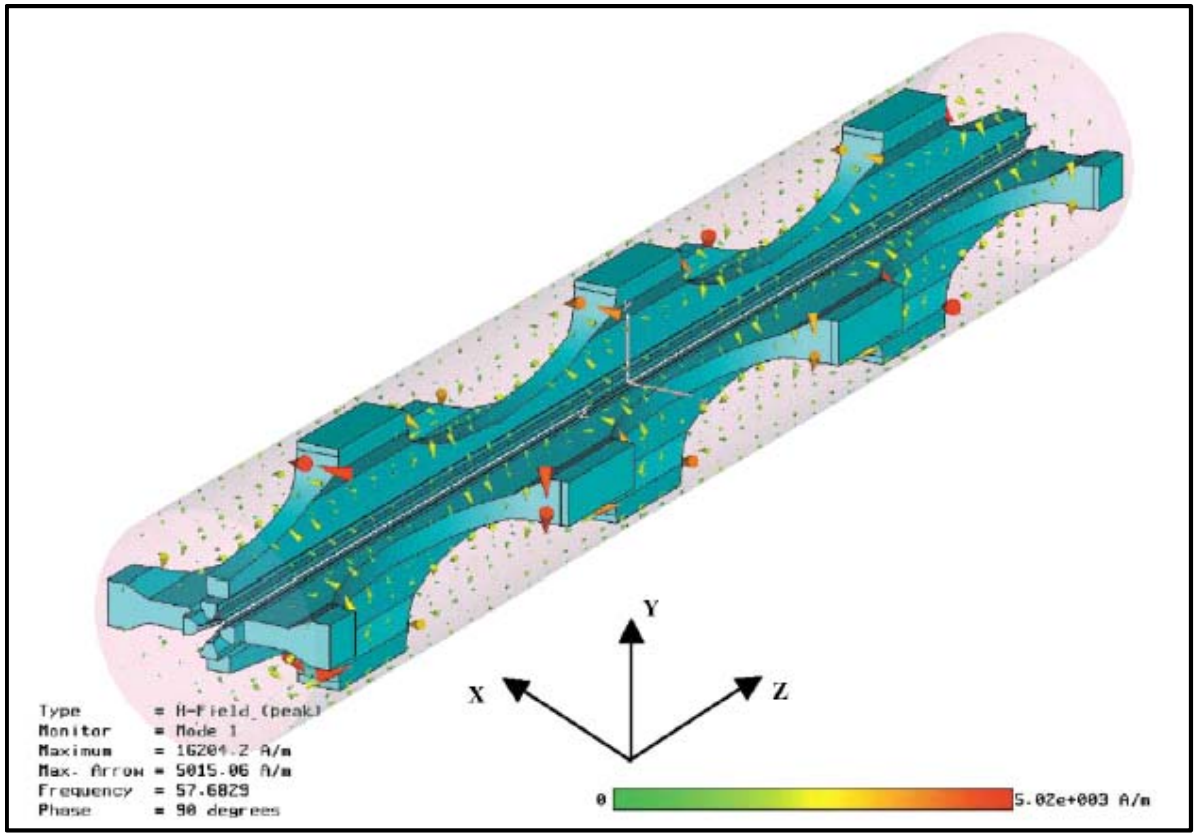

Frequency of the 5-segment RFQ, MWS model with modulated vanes

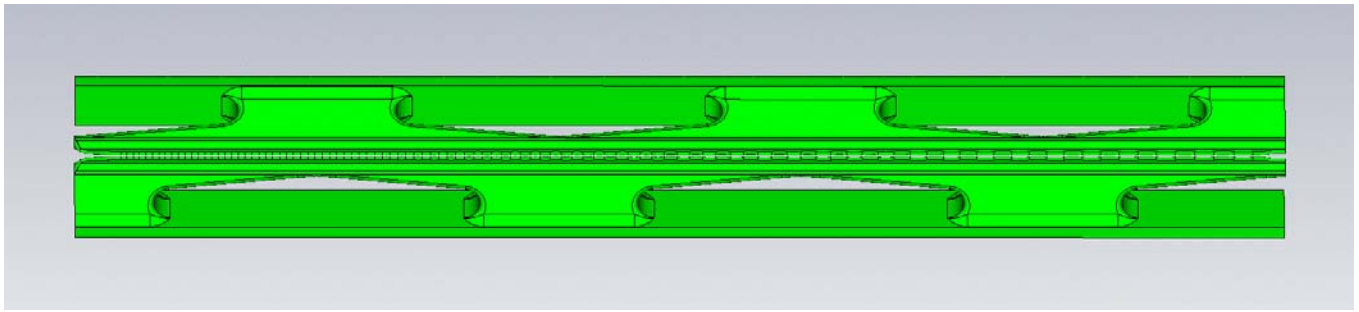

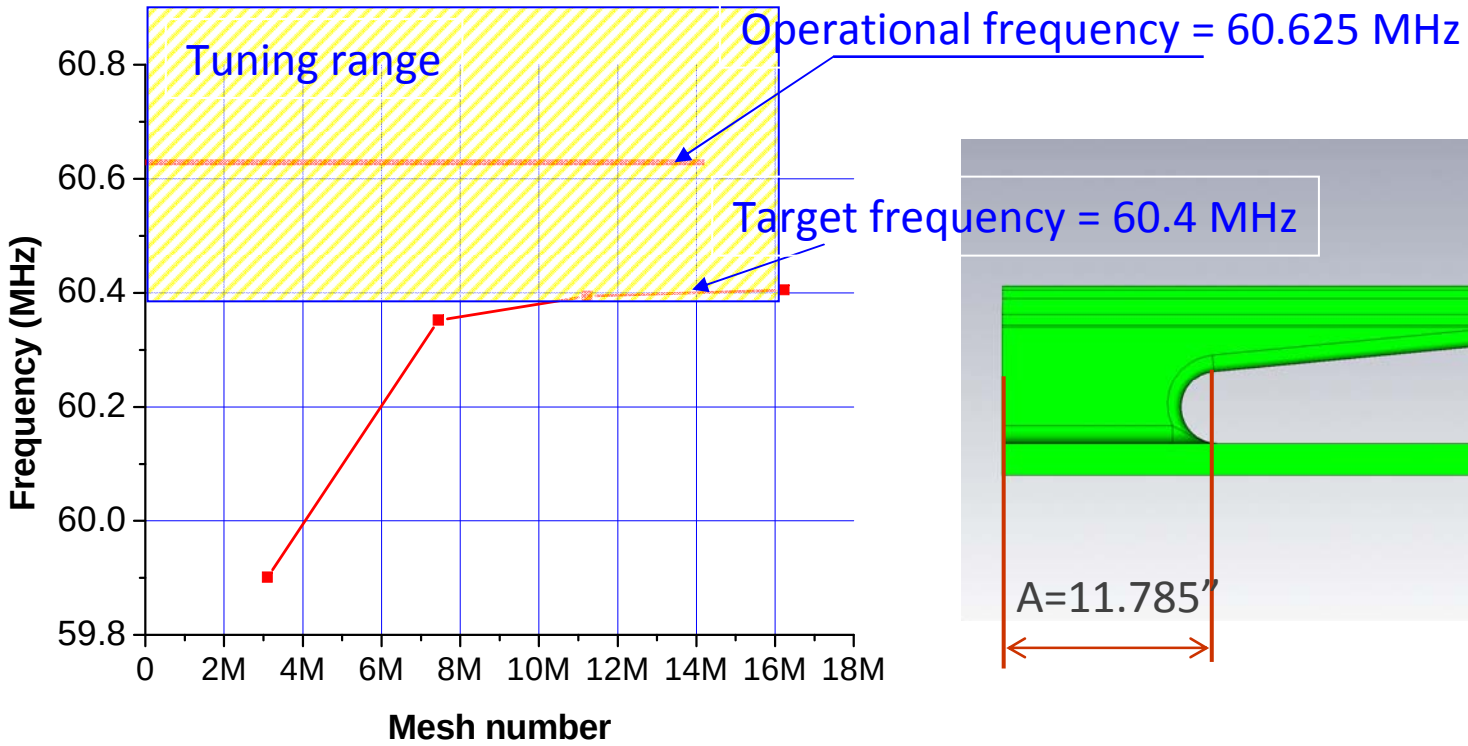

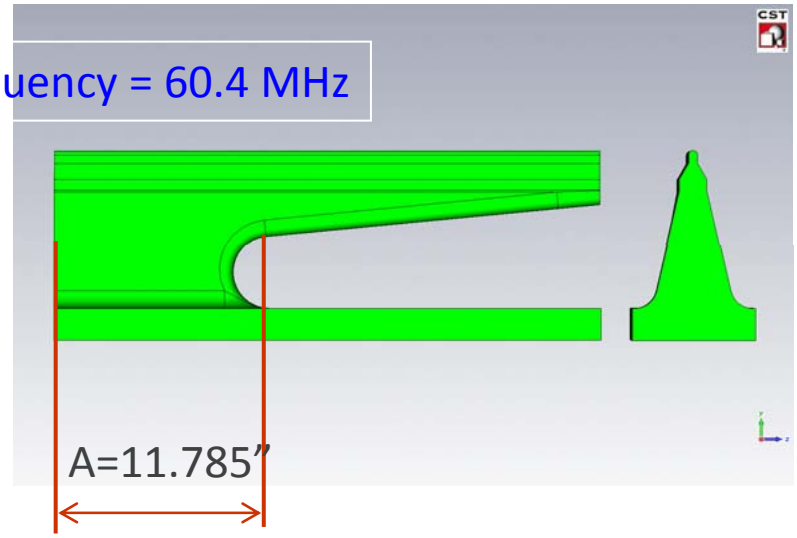

Potential distribution in the aperture

- Electrostatic approximation

$$U(r,\vartheta,z)=\frac{U_l}{2}\left[F_0(r,\theta)+\sum_{n=1}^{\infty}F_{2n}(r,\vartheta)\cdot\cos 2nkz+\sum_{n=1}^{\infty}F_{2n-1}(r,\theta)\cdot\cos(2n-1)kz\right]$$

$$F_0(r,\theta)=\sum_{m=0}^{\infty}A_{0,2m+1}\left(\frac{r}{R_0}\right)^{2(2m+1)}\cdot\cos 2(2m+1)\theta$$

$$F_{2n}(r,\theta)=\sum_{m=0}^{\infty}A_{2n,2m+1}\cdot I_{2(2m+1)}(2nkr)\cdot\cos 2(2m+1)\theta$$

$$F_{2n-1}(r,\theta)=\sum_{m=0}^{\infty}A_{2n-1,2m}\cdot I_{4m}[(2n-1)kr]\cdot\cos 4m\vartheta$$

$$T=\frac{\pi}{4}\cdot A_{10}$$ - Accelerating efficiency

$$K^2=\frac{eU_l}{4m_0c^2}\cdot\left(\frac{\lambda}{R_0}\right)^2 A_{01}$$ - Focusing efficiency

ATLAS RFQ, Beam Dynamics design

- Very low longitudinal emittance
- Beam current up to 1 mA, CW
- For the first time for the RFQs, the full 3D model of the RFQ was created in CST Particle Studio
- Found exact same dynamics in the TRACK code and CST

Accelerating field from CST MWS

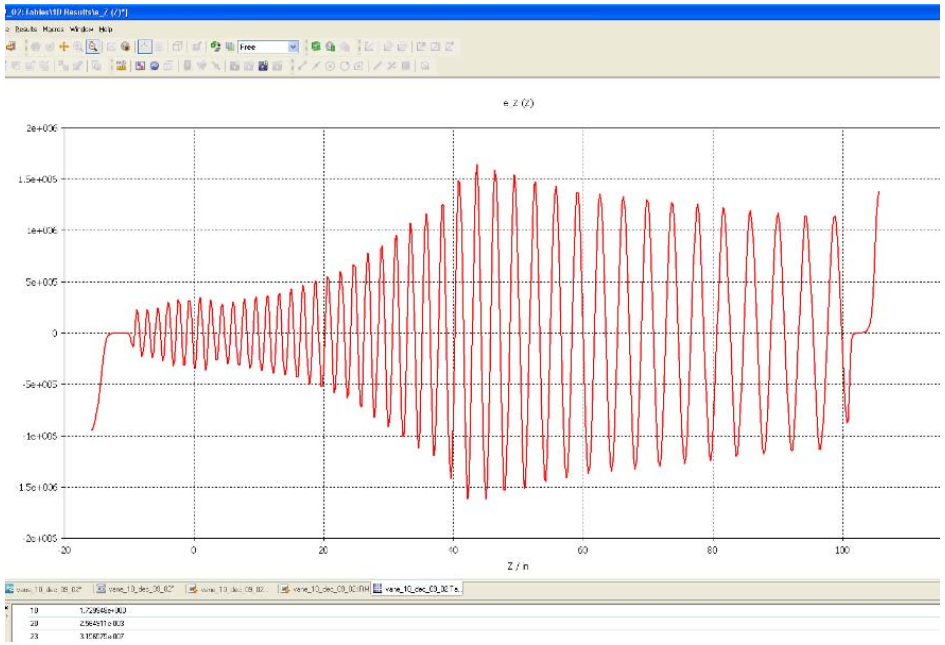

First MWS simulations of the modulated vanes in an RFQ resonator

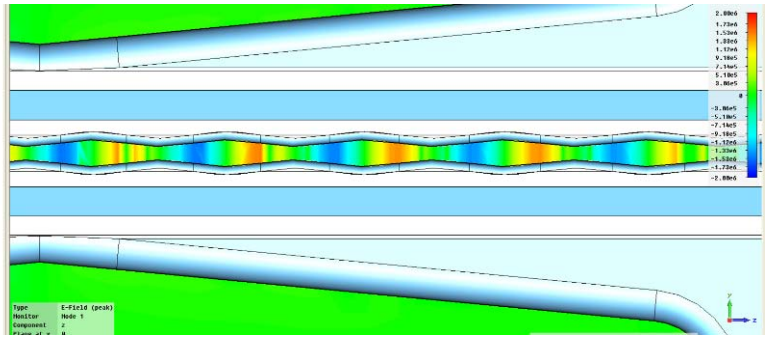

RFQ section with 3D electric field map

Comparing TRACK 8-term potential to Full 3D RFQ Model (Fields)

- ✓ Field comparison along Z at $R_0/4$
  - TRACK 8-term potential (red)
  - Full 3D EM-Studio model (green)
- ✓ The longitudinal field component agree to better than 1%.
- ✓ The transverse components differ by 1-2 %.
- ✓ For a complete independent check: A full 3D MW-Studio model with particle tracking produced the same energy gain as TRACK for the same input phase.

Field distribution E(x,y,z) in the RFQ

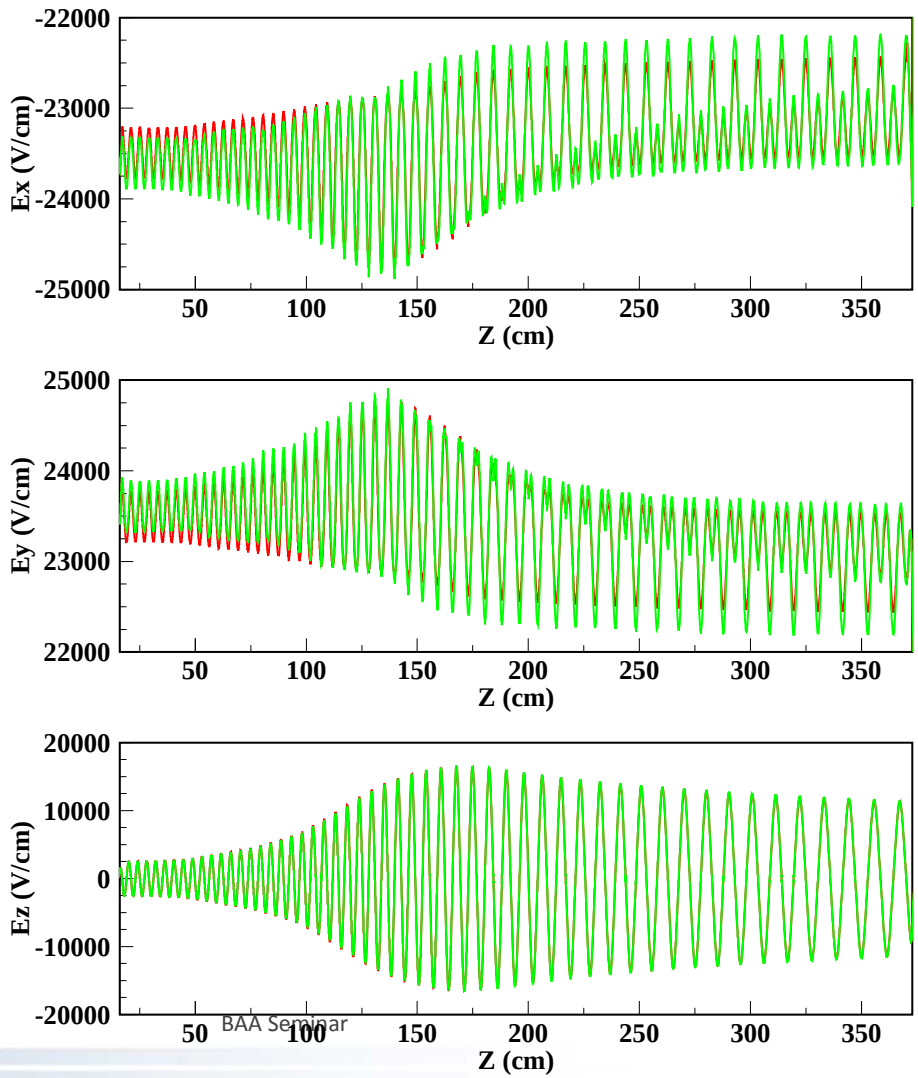

Increased efficiency of the RFQ accelerating field

- Conventional approach

ANL approach

Based on design developed at IHEP, Protvino (Russia)

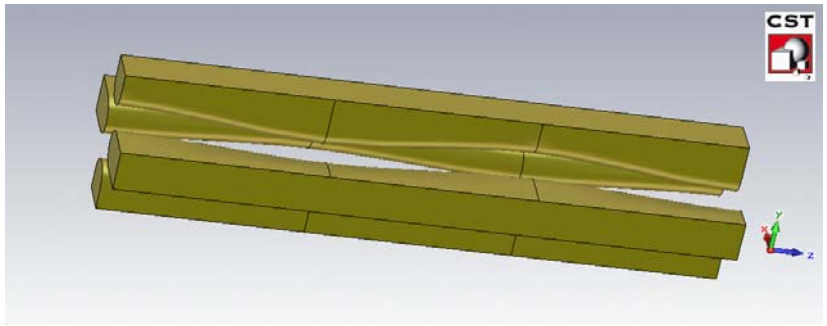

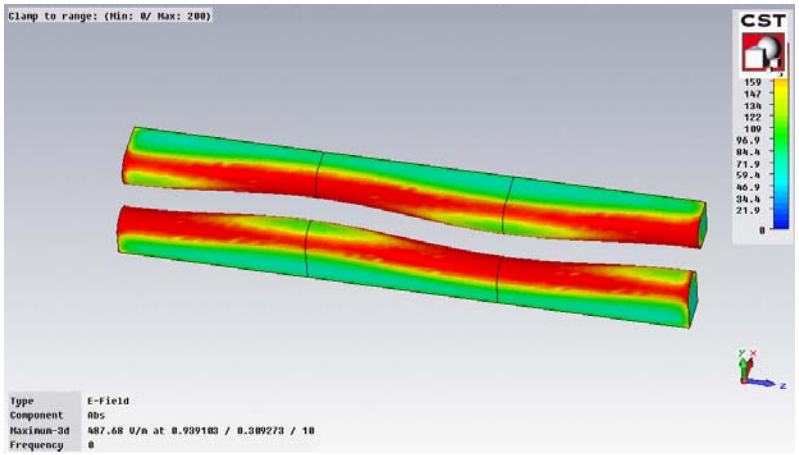

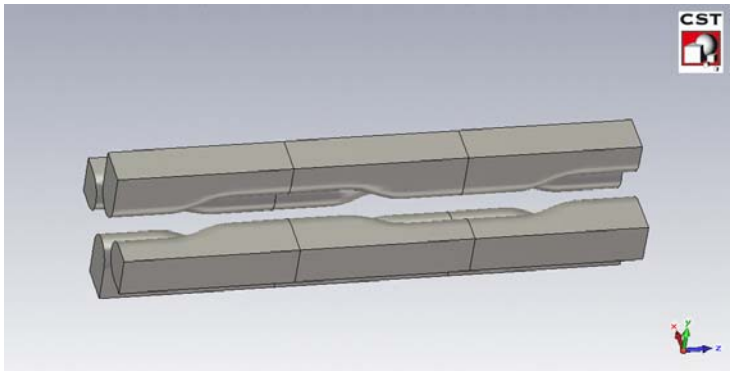

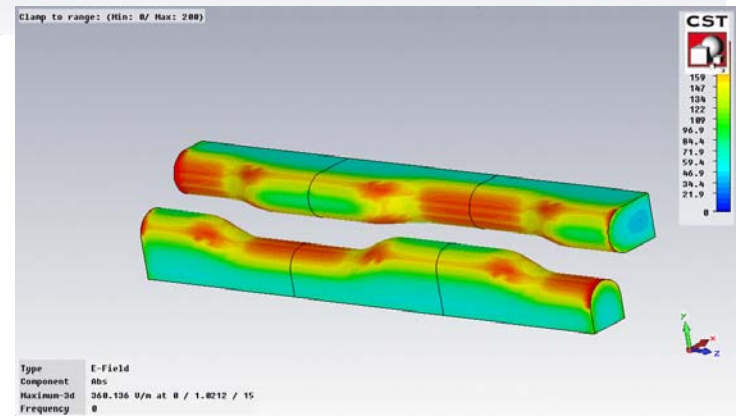

Accelerating field in the RFQ

- Increased effective accelerating field due to the higher transit time factor
  - ATLAS RFQ: energy increase from 250 keV/u to 295 keV/u
  - Equivalent voltage gain in the modified section is 400 kV
  - The same RF power

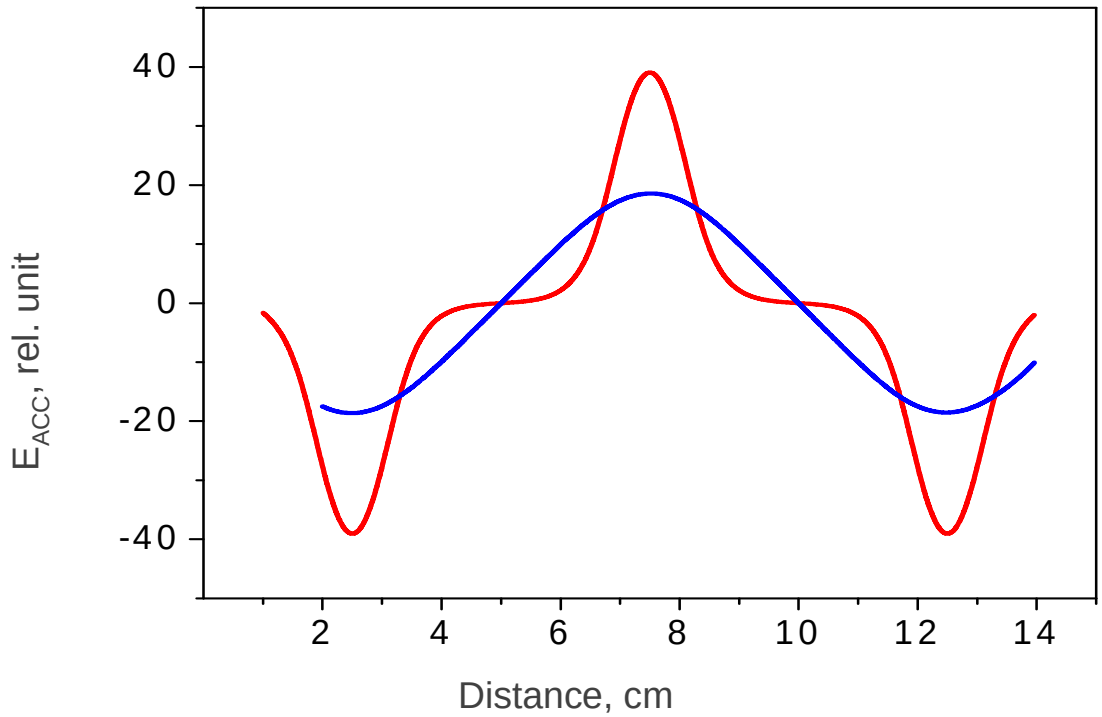

Input & Output radial matchers

- Input beam matching – from static to dynamic acceptance
- Output beam matching – to the following beam linac

In

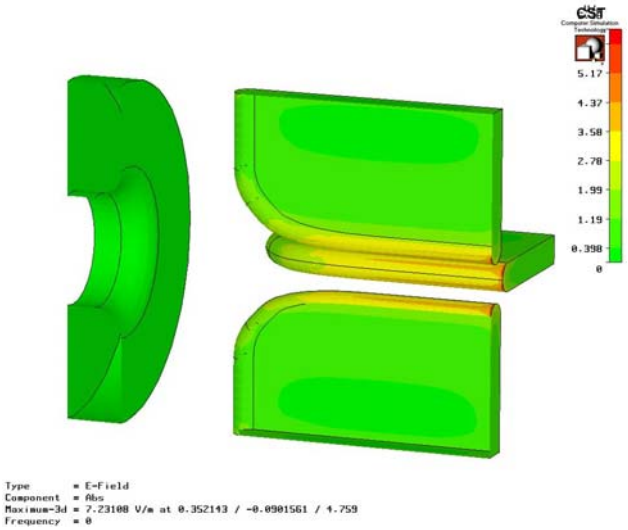

Out

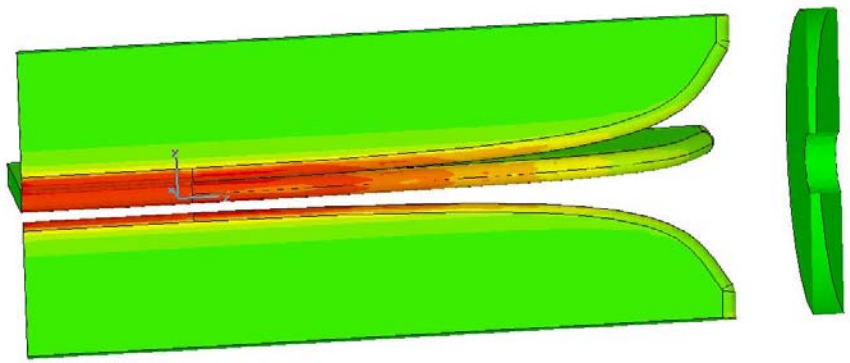

New Type of Output Radial Matcher

(only 2 electrodes are shown)

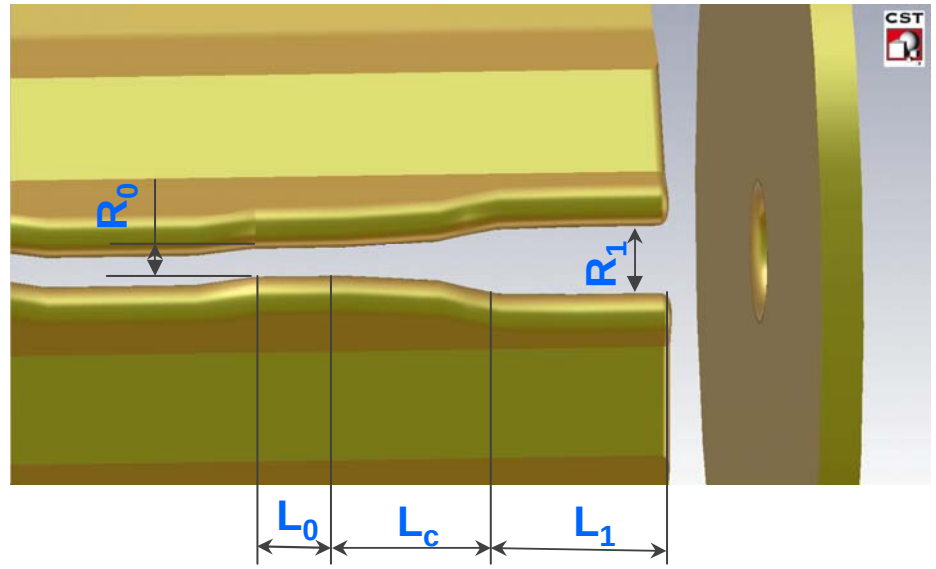

Geometry and its Parameters:

- ✓ First straight section of length L_0 at the average radius R_0
- ✓ End straight section of length L_1 at a radius R_1 to be determined
- ✓ Curved middle section of length L_C linking the first and last straight sections

- ✓ The only defined parameters are the average radius R_0 and the total length of the matcher $L_T=L_0+L_1+L_C$ due to the fixed RFQ length.
- ✓ Using a fit where L_0, L_1 and R_1 are varied we were able to get a symmetric beam out of the RFQ for a total output matcher length as short as 7 cm.
- ✓ This more flexible output matcher relaxes the total length constraint we had with the more standard output matcher obtained by mirroring the input matcher.

Temperature Results

Scaled to inter-vane voltage of 70 kV
Load on segment 10.65 kW at temperature
Temp dependent heat loads
Vane inlet Temp 21.1ºC
Quad inlet Temp 25.9ºC

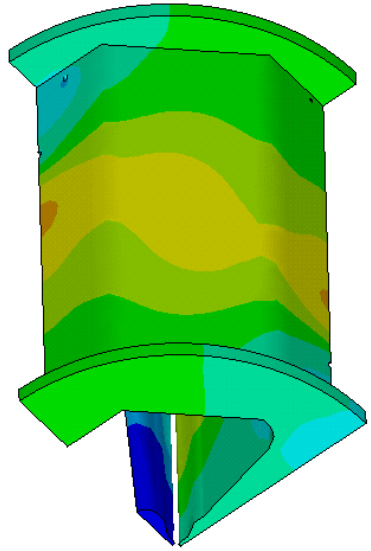

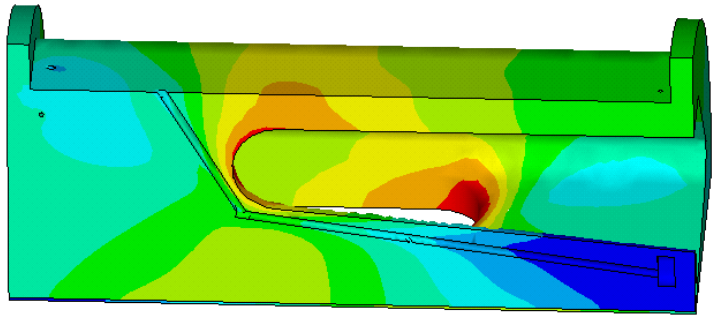

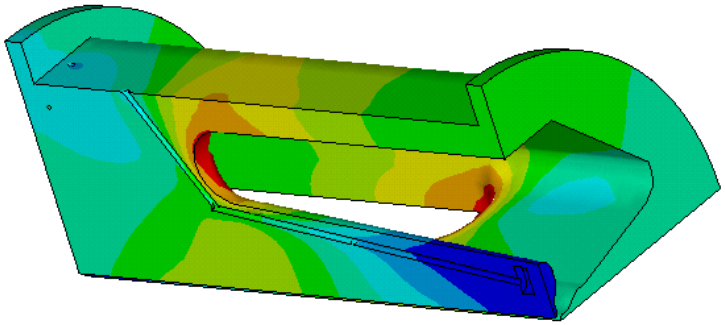

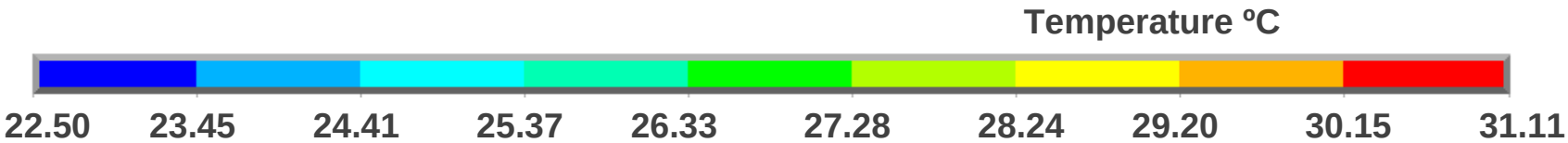

Displacement Results

Scaled to inter-vane voltage of 70 kV
Load on segment 10.65 kW at temperature
Temp dependent heat loads
Vane inlet Temp 21.1ºC
Quad inlet Temp 25.9ºC

Ambient Pressure and coolant pressure (70. psi) loads- no gravity

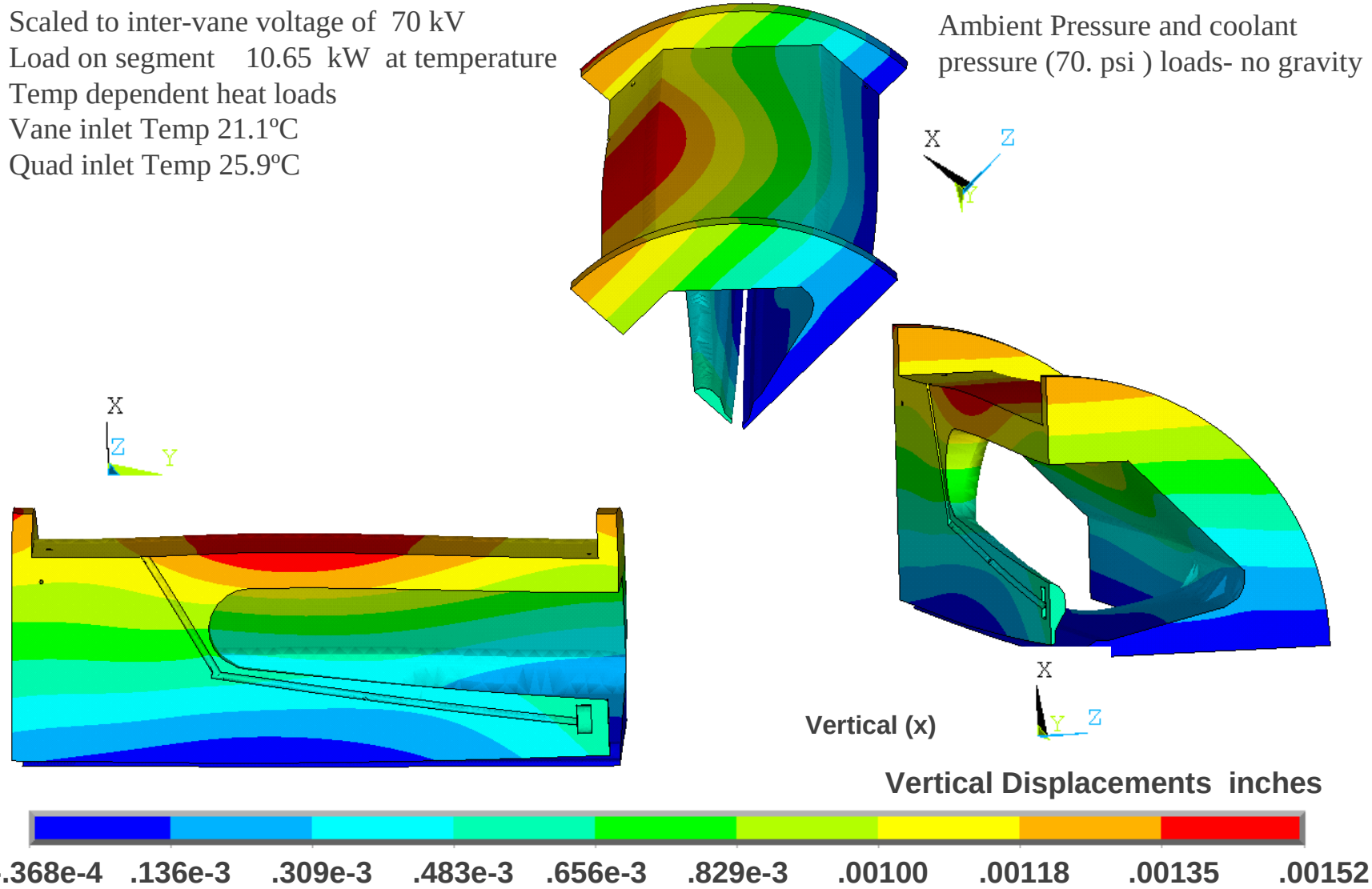

High power tests of the RIA driver linac RFQ

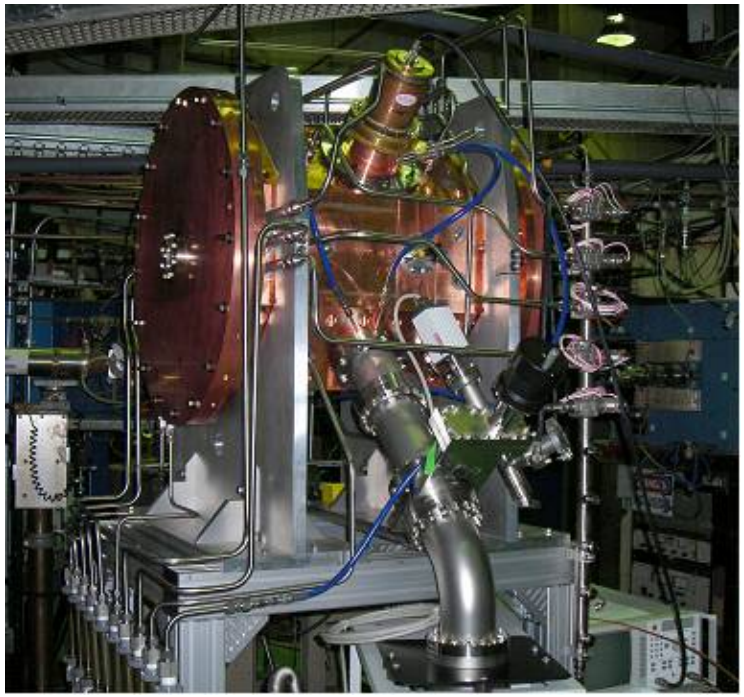

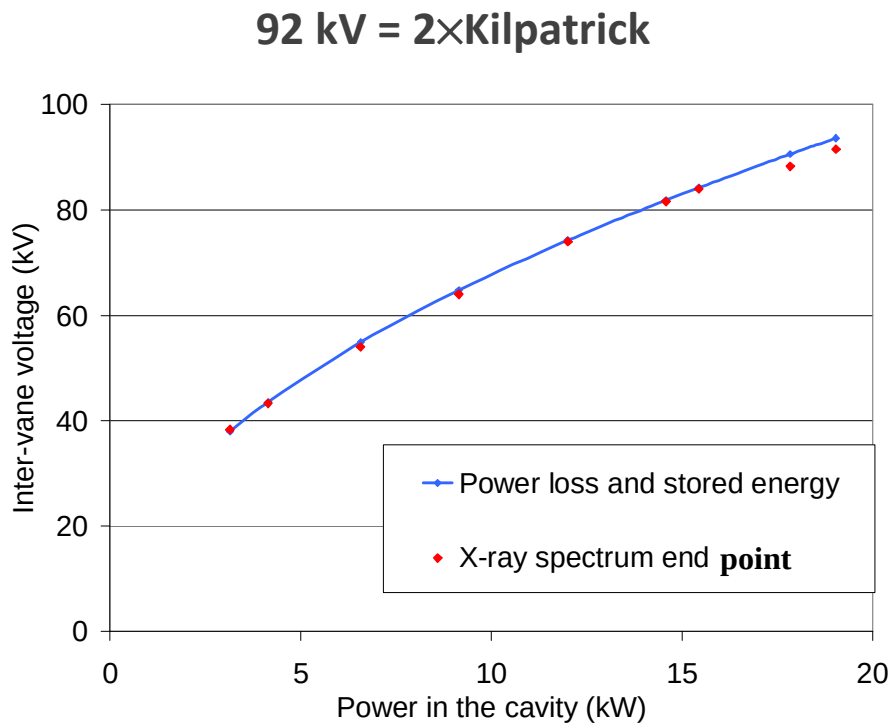

Study of the vane tips displacement

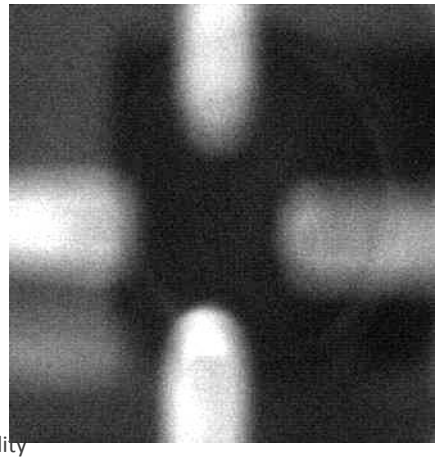

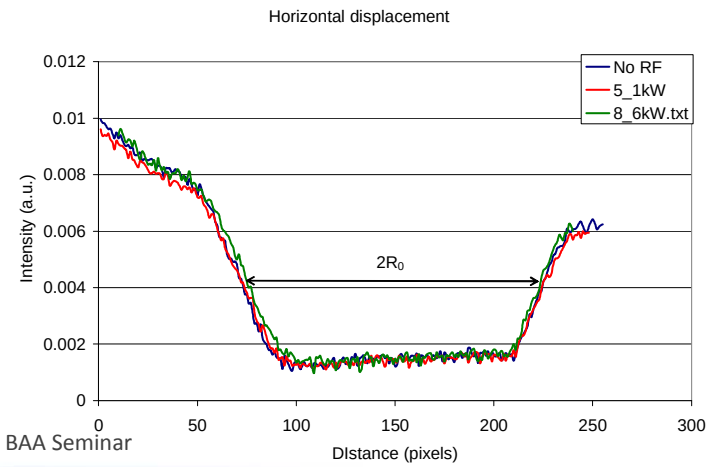

RFQ Beam Dynamics

- ✓ A/q=4
- ✓ 10 pμA, 295 keV/u
- ✓ 80.5 % Capture &Acceleration efficiency
- ✓ ~ 0.8 ns×keV/u normalized longitudinal rms emittance
- ✓ Symmetric output beam for direct injection to PII

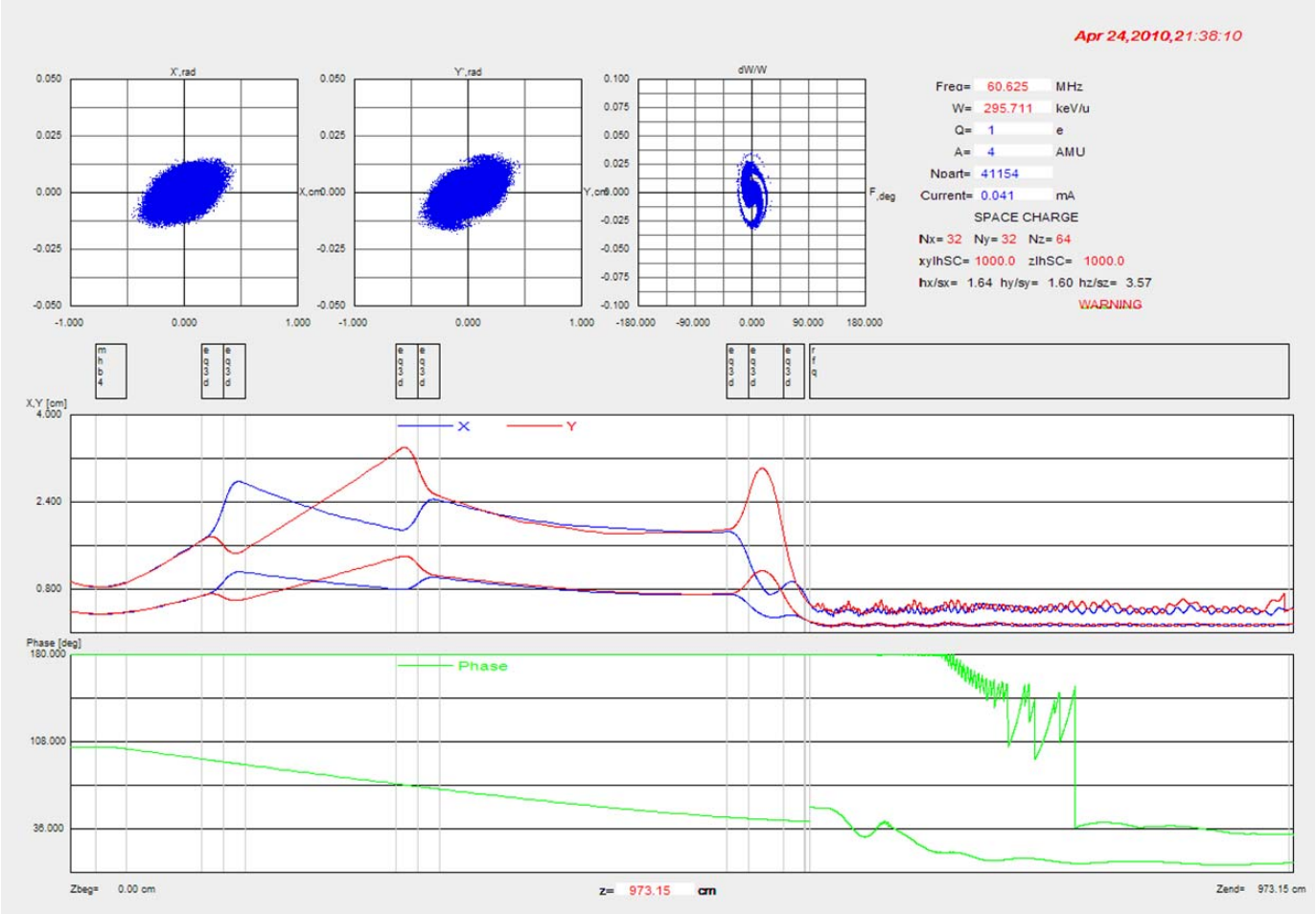

New Cryomodule

7 QWRs, four 9-Tesla SC solenoids, total design voltage is 17.5 MV,

best performance ~25 MV

5.12-meter long, Separate vacuum, Improved AEU design

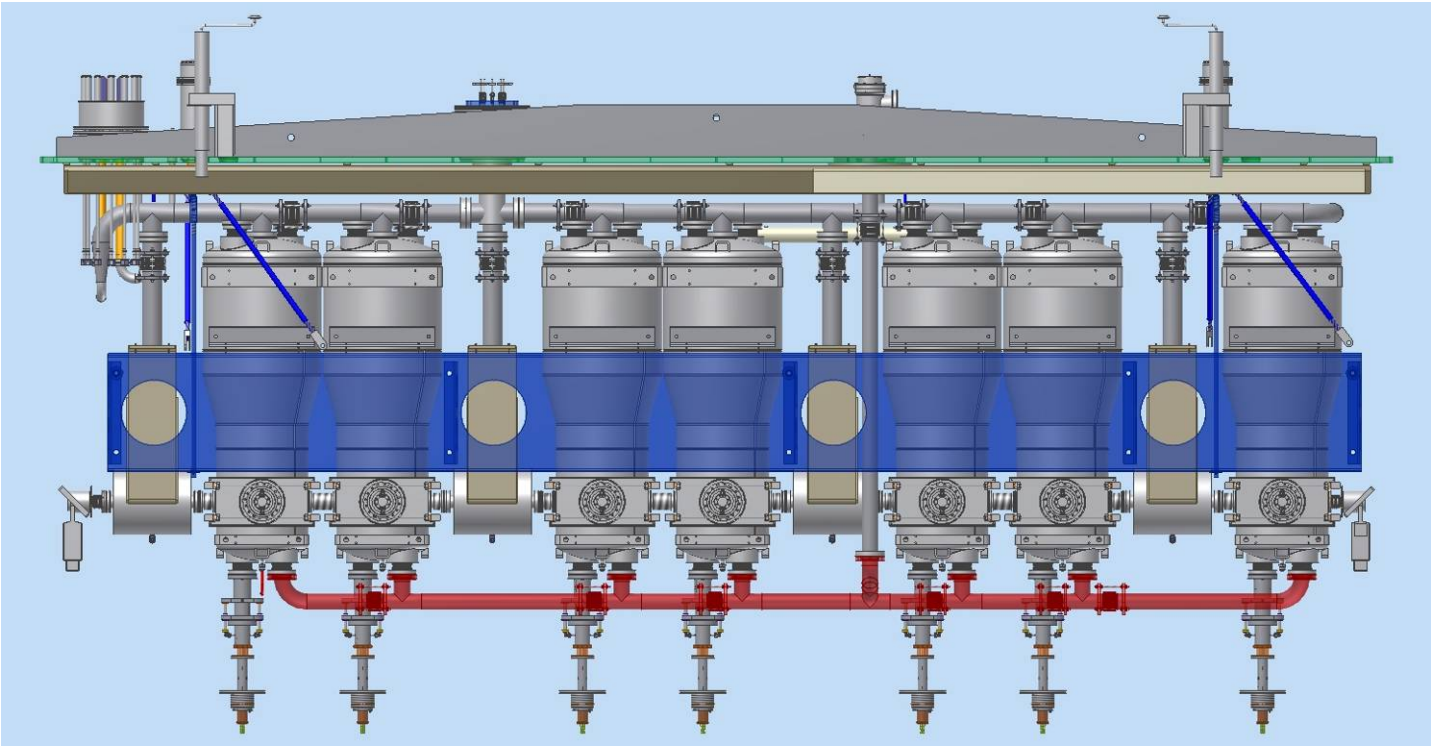

Engineering 3D model of the cavity-solenoid string

Major components of the cryomodule

- Magnetic shield

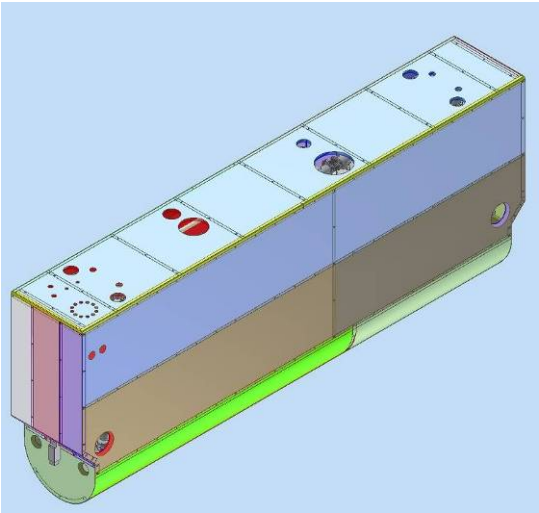

- Thermal shield

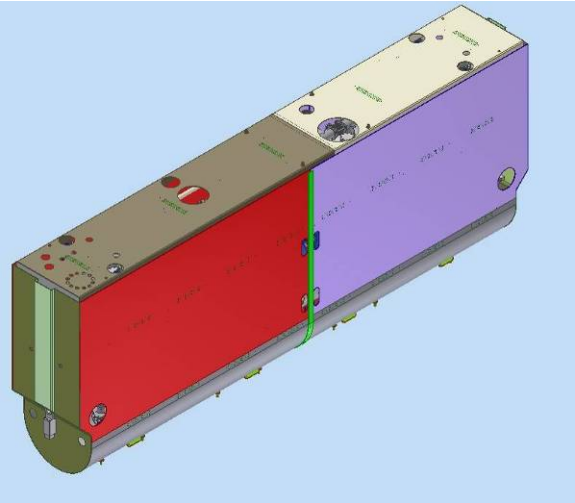

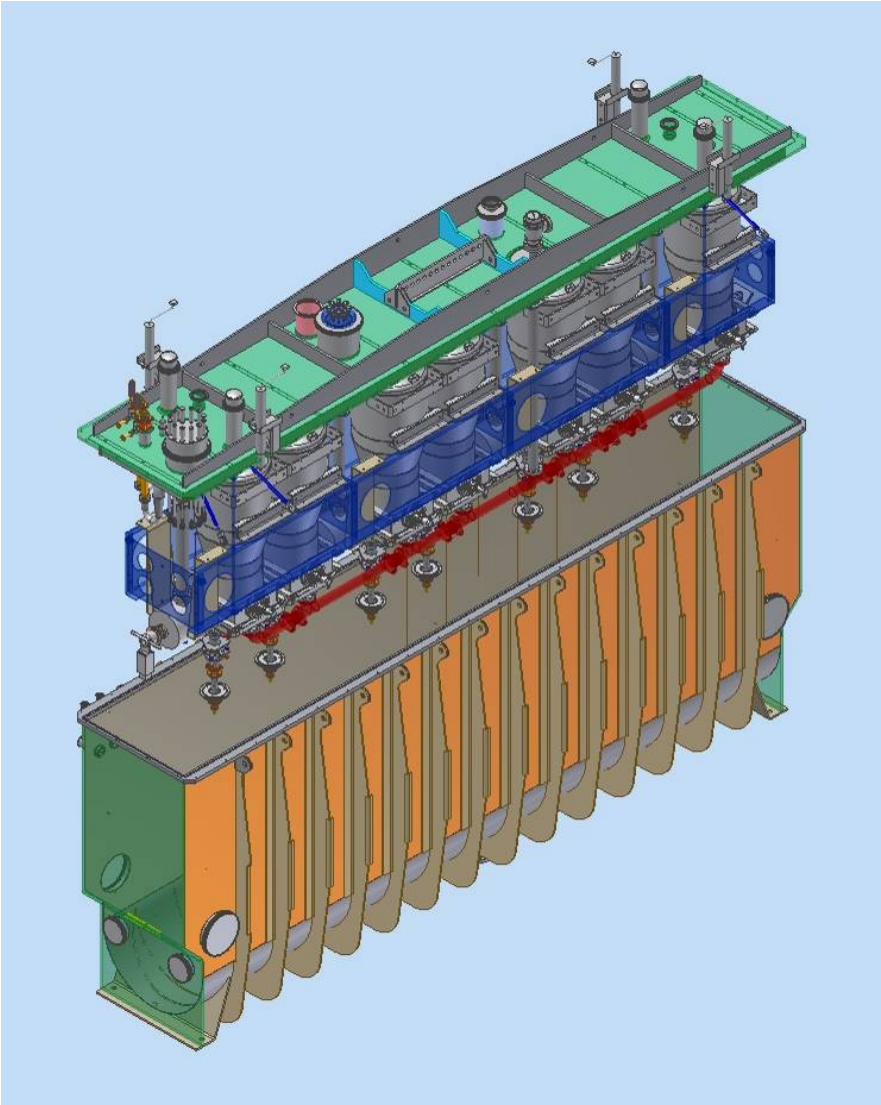

Electromagnetic design

- 60.625 MHz or 72.75 MHz
- Reduce B_{PEAK}/E_{ACC}, E_{PEAK}/E_{ACC}, ,
- Beam steering correction provided by the 2.5° tilt of the drift tube face
- Keep R/Q_0 high, Stored energy low
- Reduce the cavity height – reduce microphonics
- Simplify cavity fabrication and RF surface processing

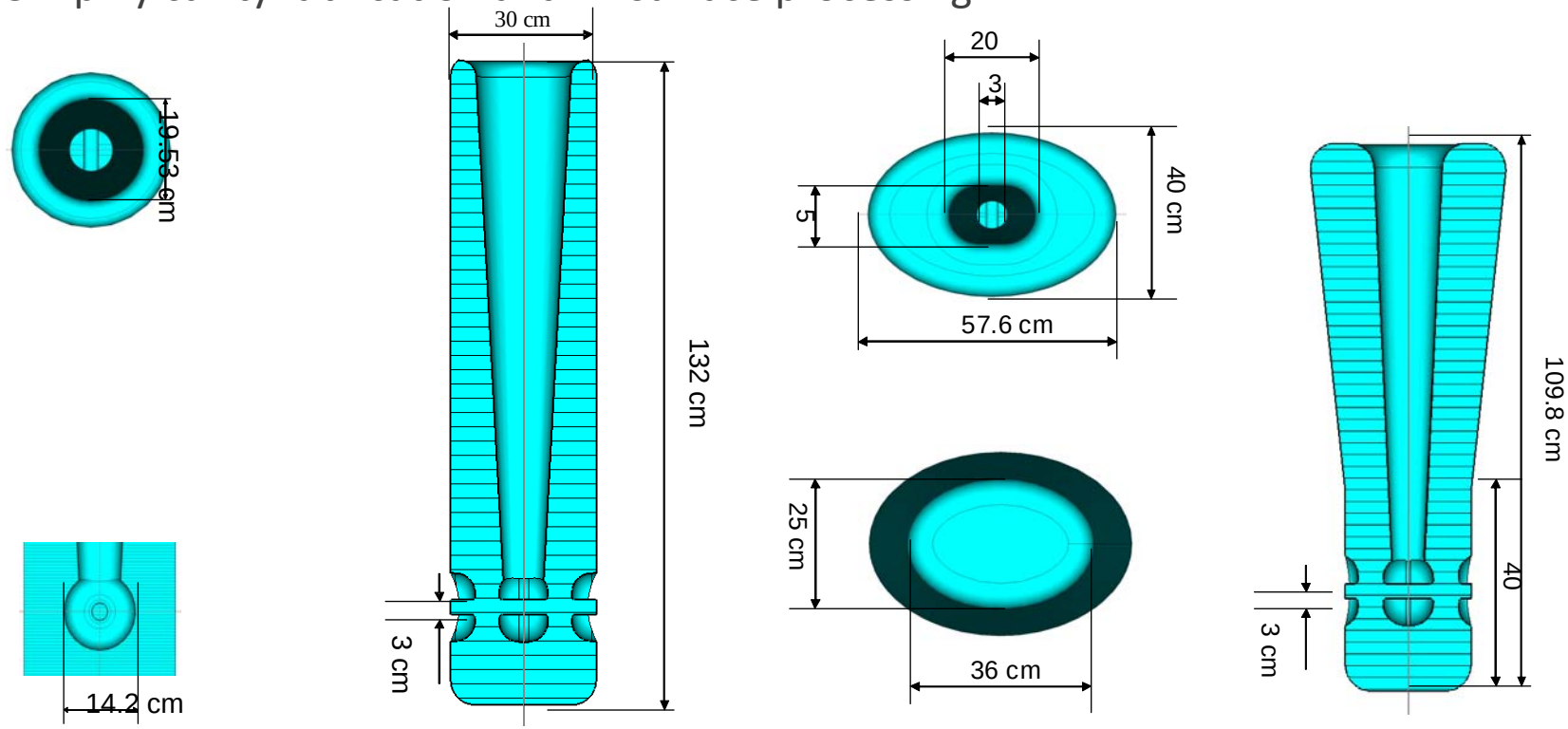

Final Resonator Dimensions

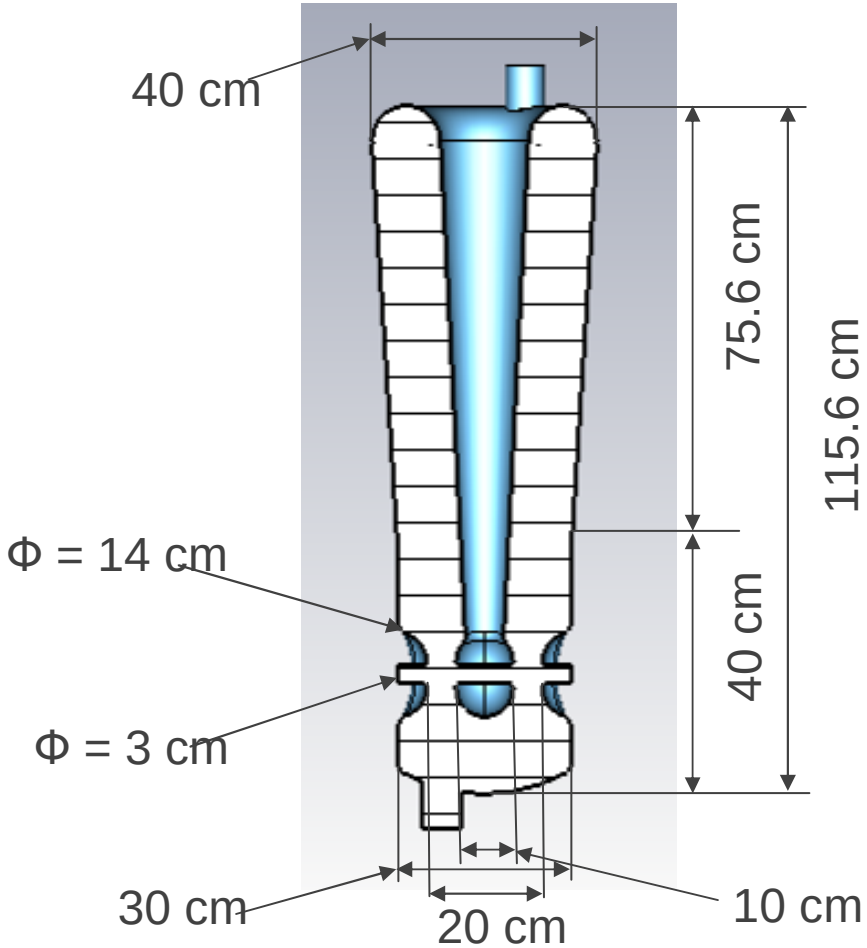

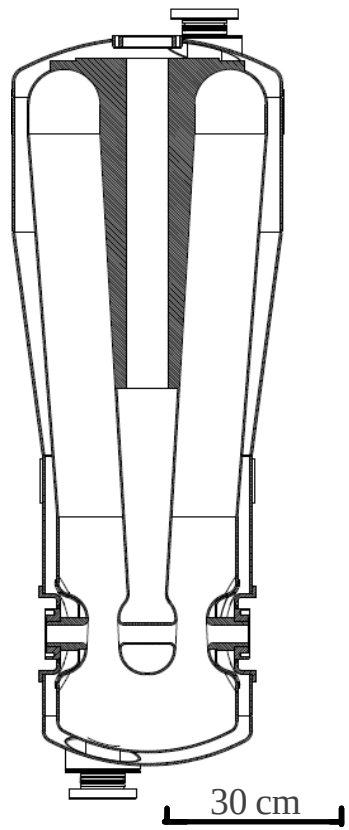

Results of the EM optimization

- Outer conductor: form cylinder to conical shape
- Drift tubes are highly optimized to reduce E_{PEAK}
- 2.5 deg drift tube face tilt to compensate beam steering problem

Frequency	109.125	72.75	MHz
beta	0.14	0.077	
U_0 at 1 MV/m	0.164	0.152	J
Length	25	20	cm
$\beta\lambda/2$	39	32	cm
E_{PEAK} at 1 MV/m	3.2	3.5	MV/m
B_{PEAK} at 1 MV/m	59	48	Gs
G	40	26	Ohm
R_{sh}/Q	548	575	Ohm

109 MHz

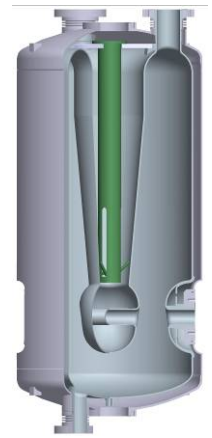

72.75 MHz

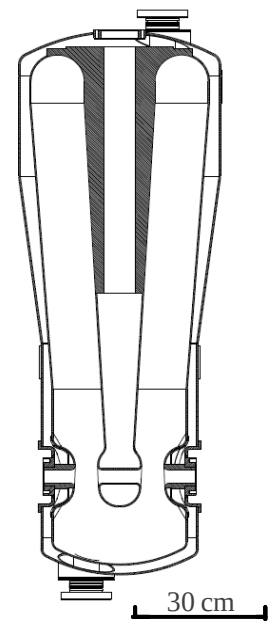

Development of low-beta SC cavities

- 109 MHz cavities
  - Demonstrated 15 MV/m in 2 cavities
  - Average cryomodule performance is 12.1 MV/m
  - Quench B_{PEAK}=88 mT
- Voltage controlled impedance (VCX) tuner limits to 8.1 MV/m
- VCX will be replace with piezoelectric fast tuner (PZT)
- Highly EM optimization – reduce peak fields
- New RF coupler (up to 4 kW)
  - Compensates beam loading up to 1 kW, 250 µA, 4 MV per cavity
  - Additional power to control microphonics
  - Adjustable (operation, ~15-20% higher gradients)
- Both PZT and RF coupler are suitable for any other applications in low-beta cavities
- Diagnostics of quench locations in QWRs
  - Complicated geometry compared to elliptical cavities

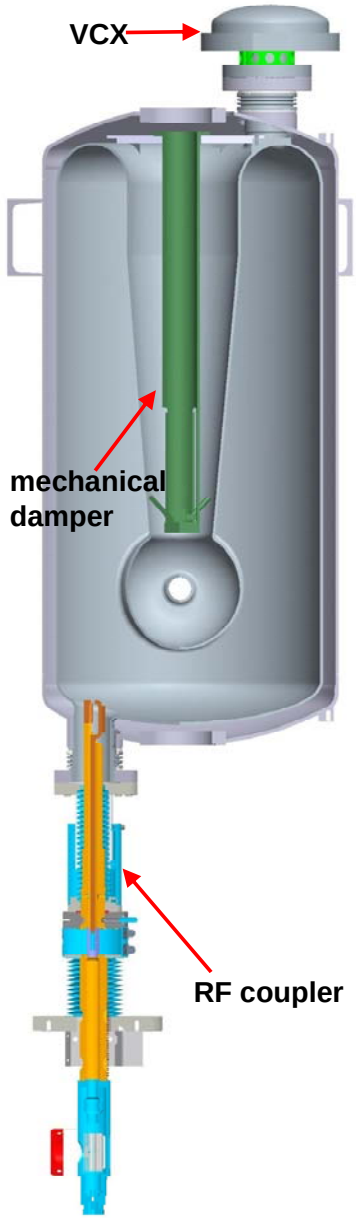

Electropolishing

- High quality electropolishing should result to higher intrinsic Q_0 , lower cryogenics load. For new cavities we expect at least $Q_0=1\times10^9$ at operational field (4.5K)
- Electropolishing of entire cavity after all welding done reduces risk of cavity contamination and possibly increases quenching peak fields
- Therefore essential part of the project R&D is high-quality electropolishing similar to ILC technique
- Physics Division SRF group is a major contributor to ILC program

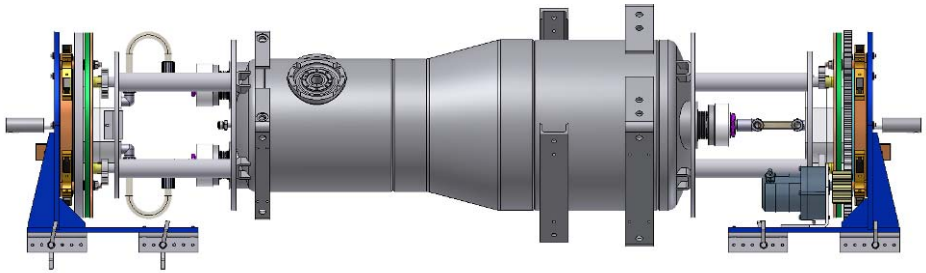

New capacitive RF power coupler

- 4 kW forward power, RF losses = 1.75 W total, most of which is dumped in LN

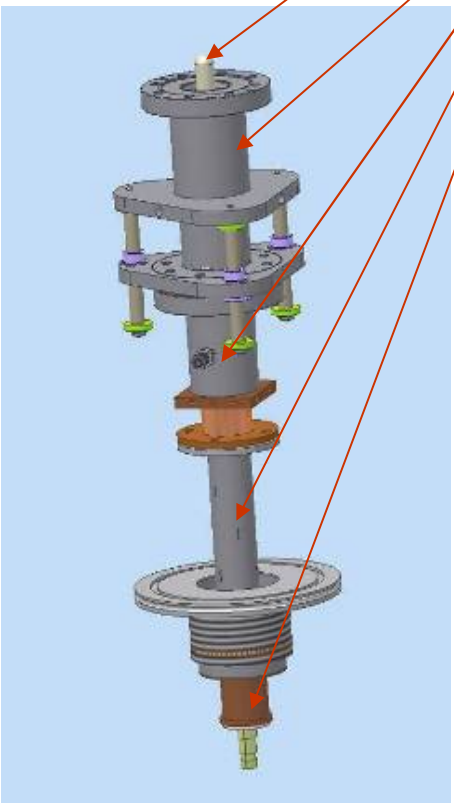

Antenna
Bellows (up to 2” stroke)
Cold window
Thermal transition
Warm window

Beam current is 100 mA, synch. phase is 25 deg

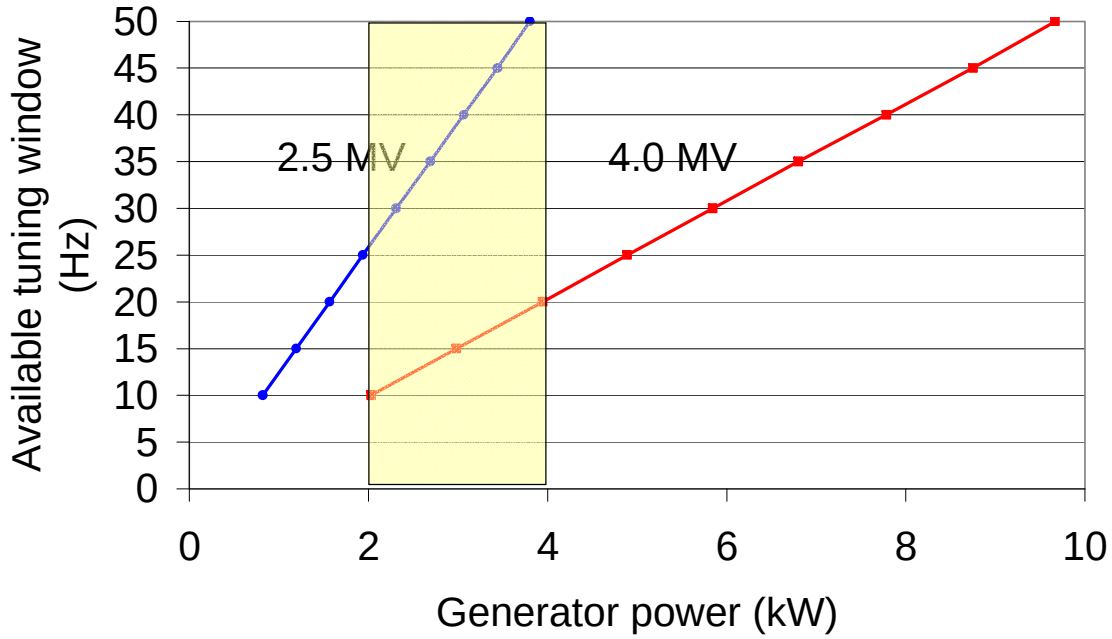

Fast piezoelectric tuner, first iteration

- Keep cavity internal volume clean; do not use slug tuners
- Reduce overall mass coupled to the PZT $\rightarrow$ increase $\omega \sim 1/\sqrt{m}$
  - Weld a Nb ring to the cavity to hold PZT
- First iteration was disappointing

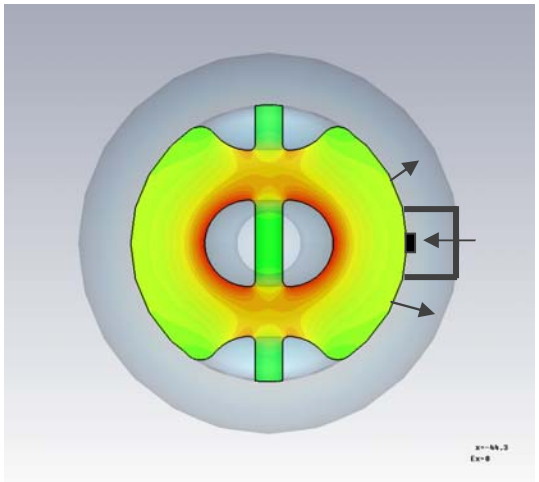

50 microns through gap element

df/ds = -1.8 Hz/micron

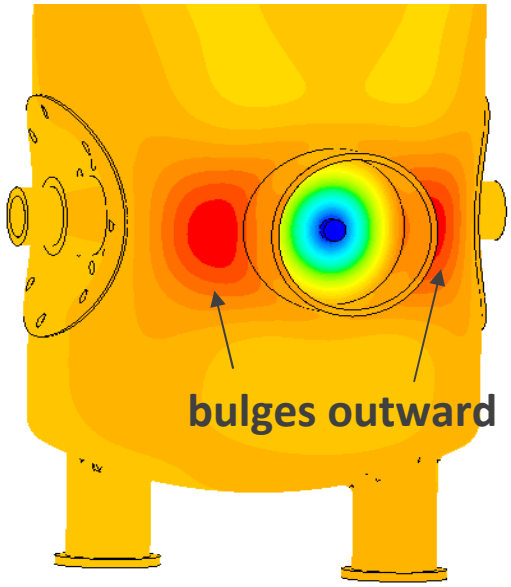

Radial displacement inches

Fast piezoelectric tuner, final design

df /ds= -23.25 Hz/micron

Tuner load 42 lbs

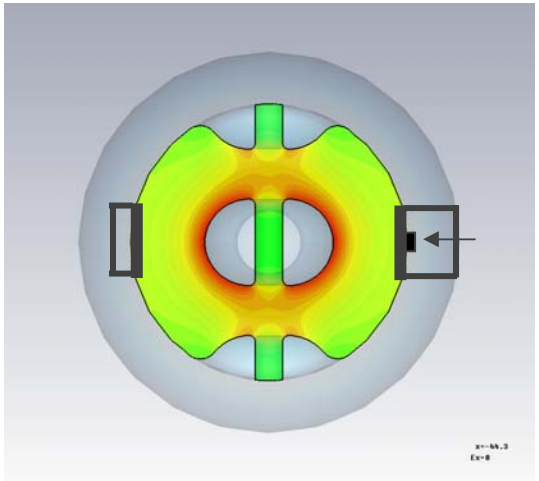

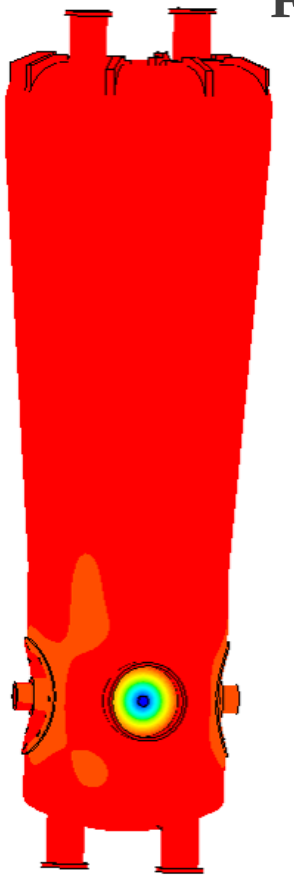

Flat surface

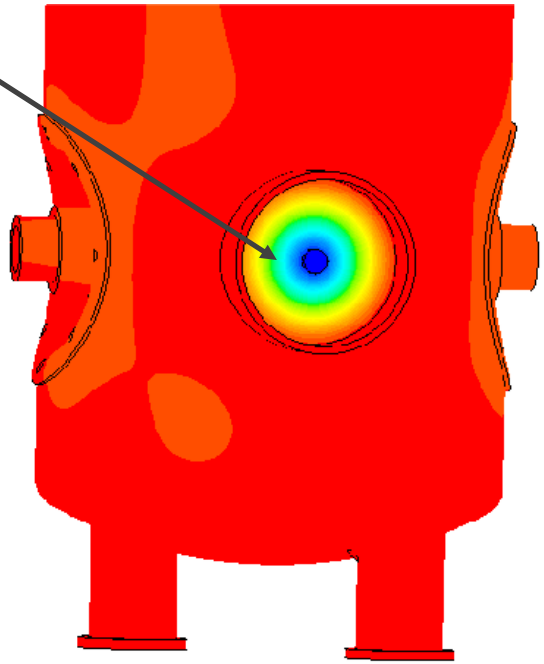

- A Nb ring added on opposite side to reduce df/dp = -1.19 kHz/atm

Radial displacement inches

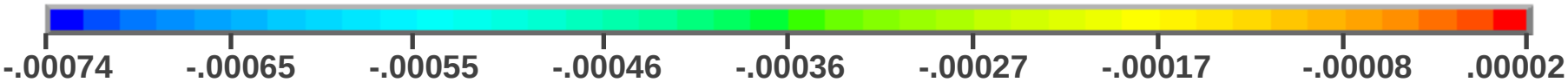

Cavity subsystems

- 4 kW capacitive coupler
  - Adjustable
  - 1 cold and 1 warm windows
- Pneumatic slow tuner

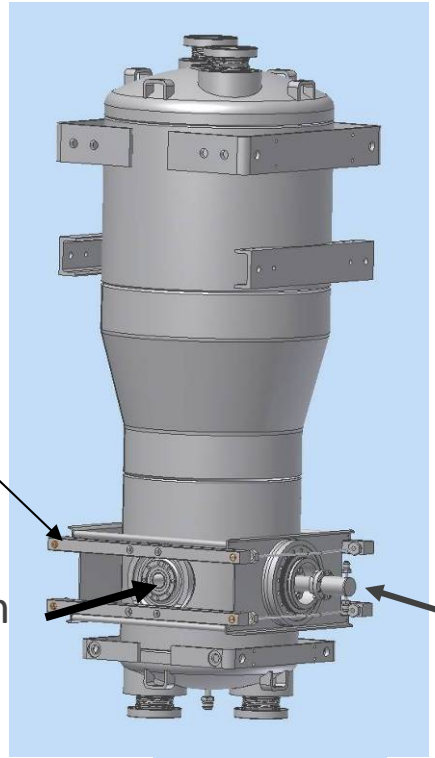

beam

- Piezoelectric tuner (PZT)
  - ~90 Hz window
  - 35 µm displacement

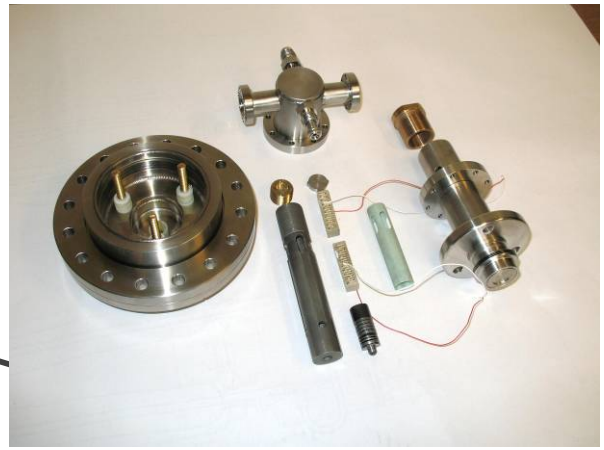

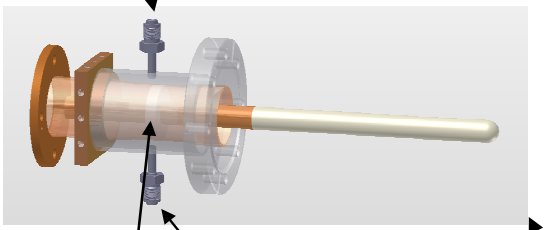

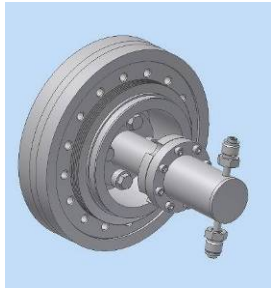

RF Coupler

Cold Test of the PZT and coupler in TC3

- Improved magnetic and thermal shielding, MLI
- Rapid clean assembly
- Suitable to accommodate any SC cavity built to date worldwide
- Successfully commissioned and operated both 4K and 2K continuously
- Recently has been used for test of single cell ILC cavity
- New RF coupler and PZT are being assembled together with HWR

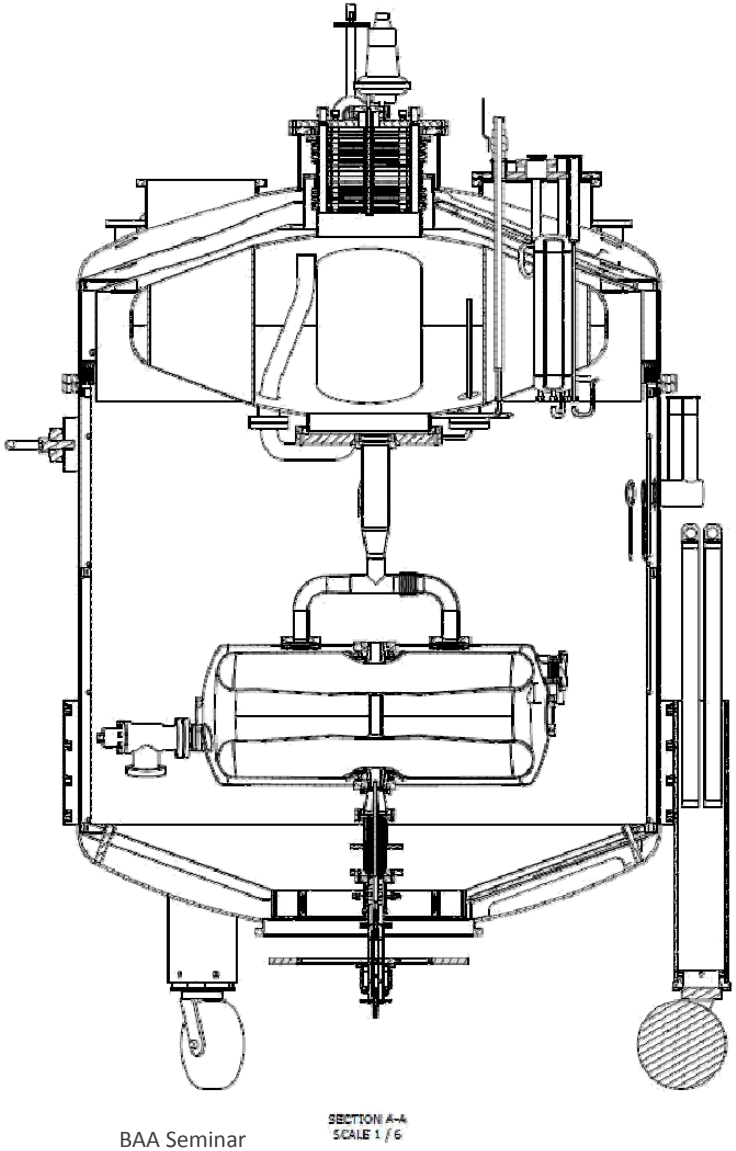

Structural analysis

- Minimize frequency sensitivity to He pressure fluctuation $\left|\frac{df}{dp}\right| \leq 1 \frac{kHz}{atm}$
- Evaluate pendulum mode of center conductor and increase Eigenmode frequencies
- Stresses in the Nb and SS vessel are acceptable up to 40 psi (MAWP) of He pressure
- Optimize location of the fast tuner, provide ~100 Hz tuning window
- Avoid interference between slow and fast tuners
- Define required load for the slow tuner for frequency range ~30 kHz

Results after several iterations using MWS and ANSYS

- The cavity He vessel will be built in compliance with **the ASME pressure vessel code**
- Frequency sensitivity to He pressure fluctuation is low (~ 1 kHz/atm)
- Slow tuner range -30 kHz at 4500 pound force
- Fast tuning window = 90 Hz

Design and Fabrication

- Niobium for the prototype cavity has been shipped to the vendor
- Forming of Nb components for the prototype cavity is in progress
- Helium SS vessels for all 7 cavities are being procured
- One 4 kW amplifier for the prototype cavity test is being built
  - We will decide later what power we need for all cavities (2 kW or 4 kW)
- Design of the cryostat vessel is nearly complete – will go for the bids in ~1-2 weeks
- Design of the electropolishing apparatus is well advanced – will be built by October 1, 2010
- R&D components – 4 kW coupler, Piezoelectric tuner, modification of the existing Half Wave Resonator (HWR) for testing
- New test cryostat TC3 has been commissioned
- One 9-Tesla SC solenoid will be delivered this month, solenoid cryostat is being built at Meyer Tool
- **Next 2 milestones are**
  - **Complete fabrication of the prototype cavity, RF measurements (warm) – 09/10**
  - **Cold test of the prototype cavity - 12/10**

q/A=1/7 Ion Beam Envelopes , Beam Loss (<0.05%) distribution

Beam Line →

Transverse RMS & Max. Beam Size →

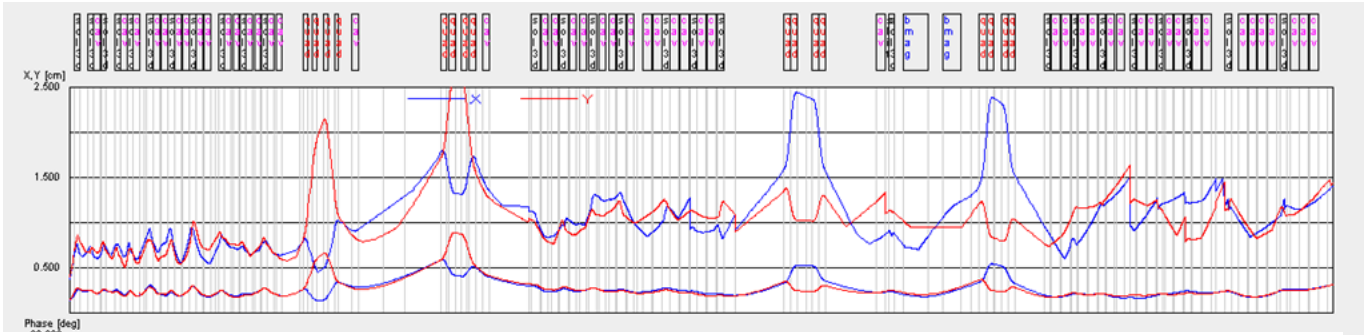

Lost particles →

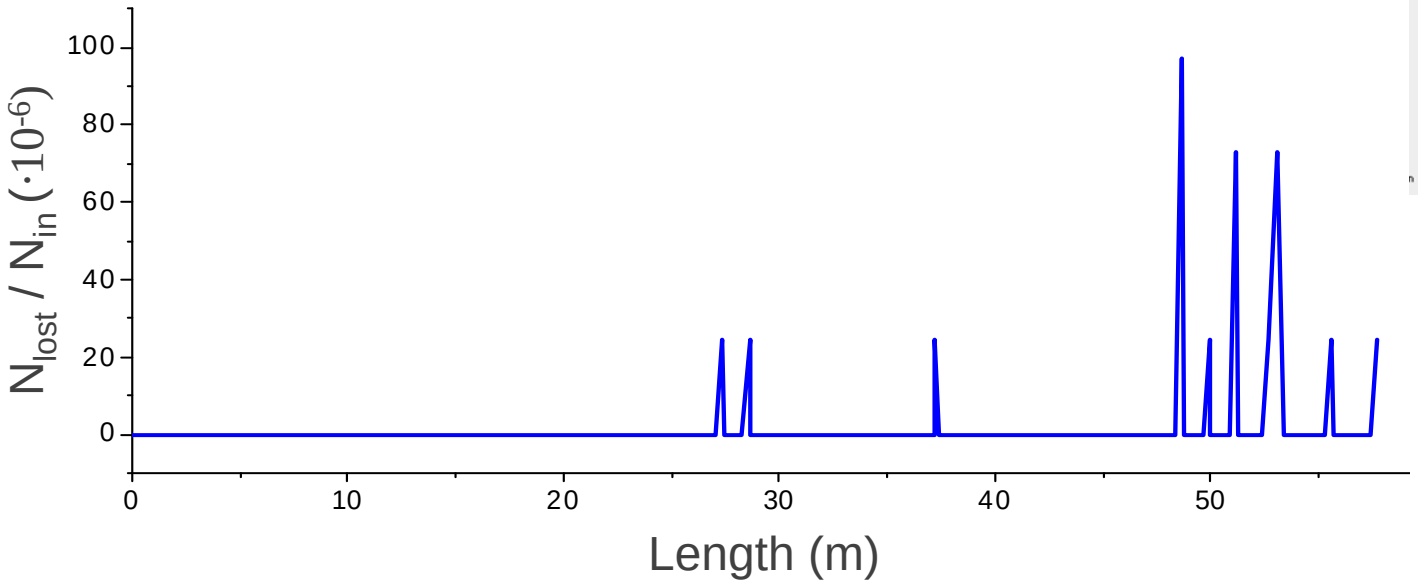

ATLAS beam Intensities after Phase I completed

- Beam intensity is limited by the ECR performance

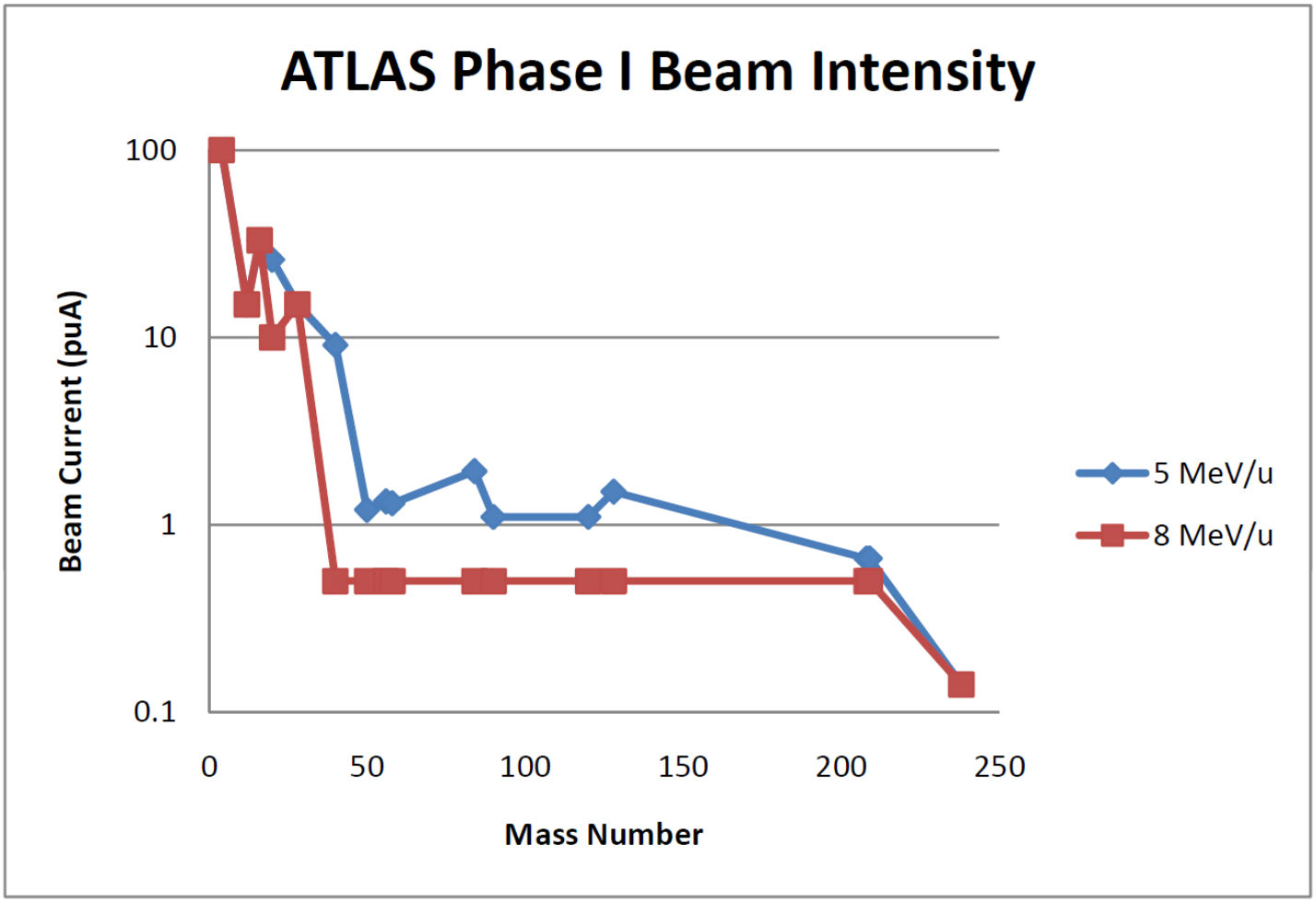

ECR charge breeder, efficiency ~10%

1+ ion, DC

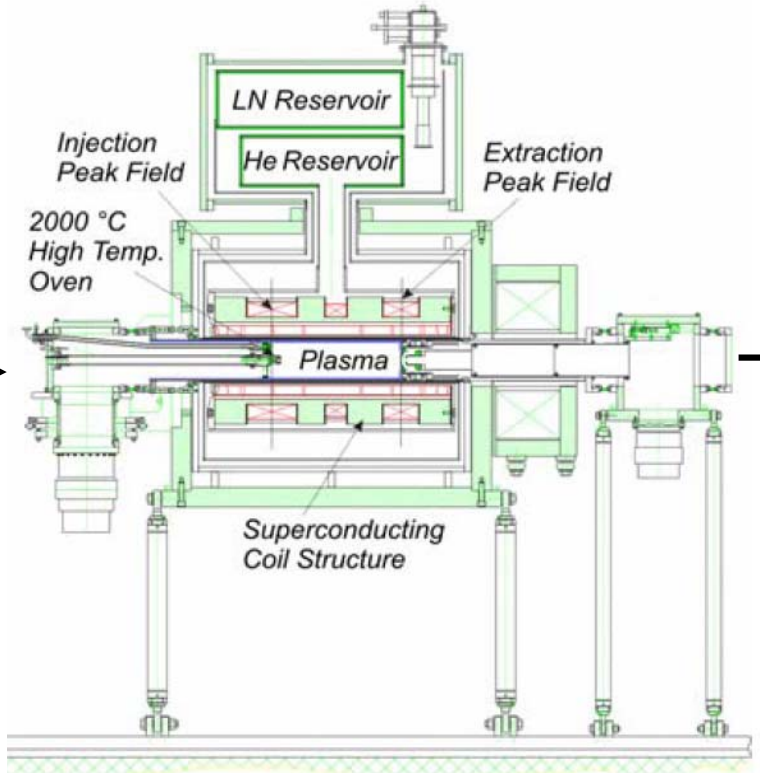

n+ ion, DC

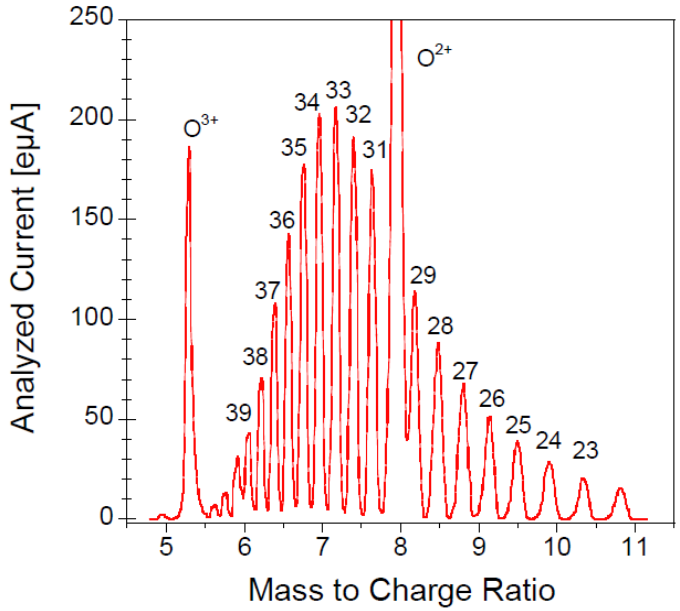

Charge Breeder for CARIBU based on Electron Beam Ion Source

- **EBIS CB vs ECR CB**
  - Breeding efficiency – factor of 2-3 higher, CERN-ISOLDE has demonstrated 35% breeding efficiency for some ion species (^{65}Cu)
  - Breeding time - < 30 msec, an order of magnitude better
  - Emittance of the high Q+ ions – low
  - Improved isotope beam purity
  - Short pulses of very low intensity beams result to good signal/noise ratio for the experiments
  - Much more relaxed voltage matching between CARIBU and EBIS-CB HV decks
- Key component of the ATLAS charge breeding set-up is a high-efficiency (~90%) cooler-buncher upstream of the EBIS. This combination is perfectly suitable for relatively low intensity RIBs (below 10^7 ions/sec) produced by CARIBU. The state-of-the art cooler-buncher technology is available in the Physics Division.
- Traditional fast (~10 μsec) pulsed injection-extraction of ion beams will be used, pulse repetition rate is 30 Hz
- Large acceptance for ion beams, the diameter of the e-beam is ~ 600 μm
- Coupled to the post-accelerator capable to accelerate $q/A \geq 1/7$, requires shorter breeding time as compared to the ion beams with $q/A \geq 1/4$ (CERN REXEBIS)
- We propose to develop two electron guns 2 A and 0.2 A, both with very high density ~600-700 A/cm^2 (factor of 5 higher than at CERN REXEBIS)
- EBIS-CB will be similar to BNL EBIS which has demonstrated the best performance

EBIS Charge Breeder for CARIBU, layout

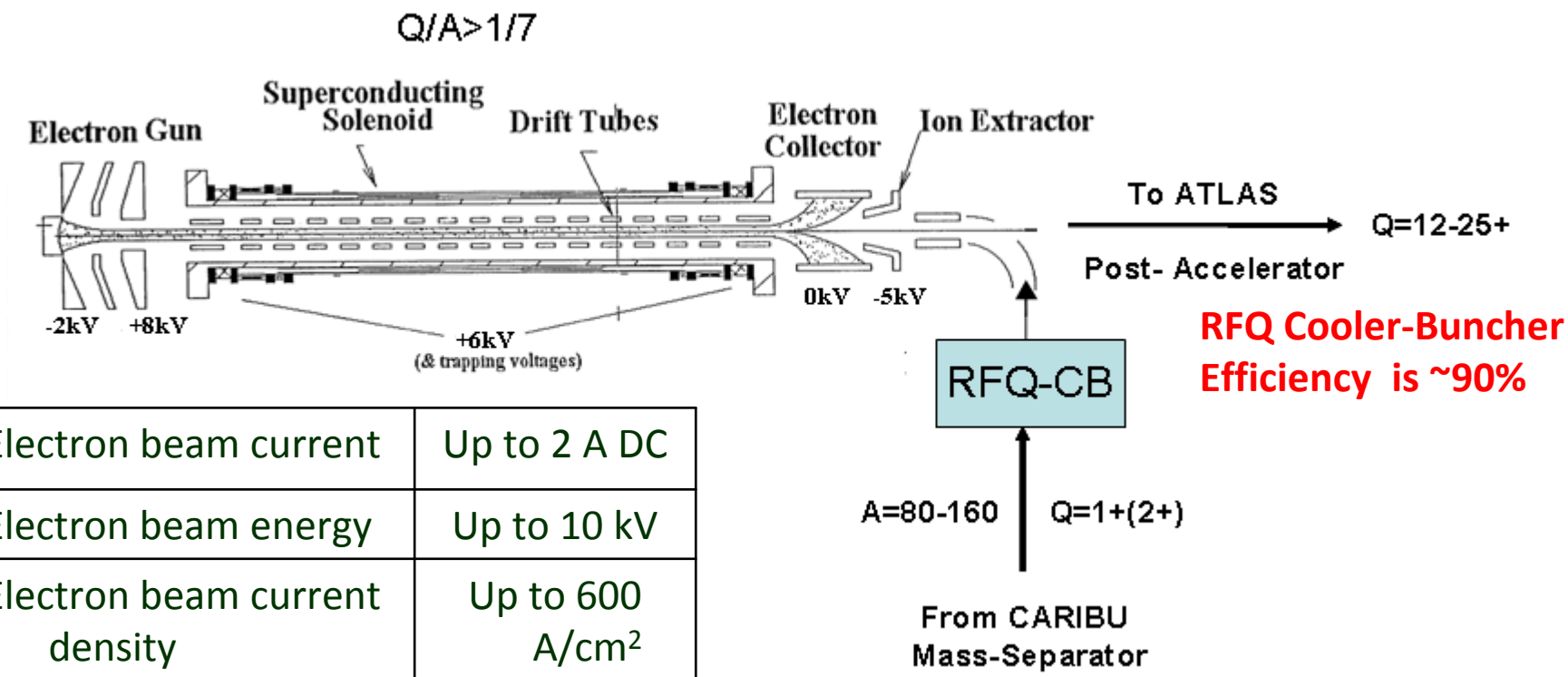

RFQ Cooler-Buncher Efficiency is ~90%

Electron beam current	Up to 2 A DC
Electron beam energy	Up to 10 kV
Electron beam current density	Up to 600 A/cm^2
Breeding time	30-40 ms
Efficiency	> 20%

The state-of-the-art BNL Test EBIS is the best choice as a prototype of the EBIS-CB

Charge State Evolution of ^{131}Xe (CBSIM code)

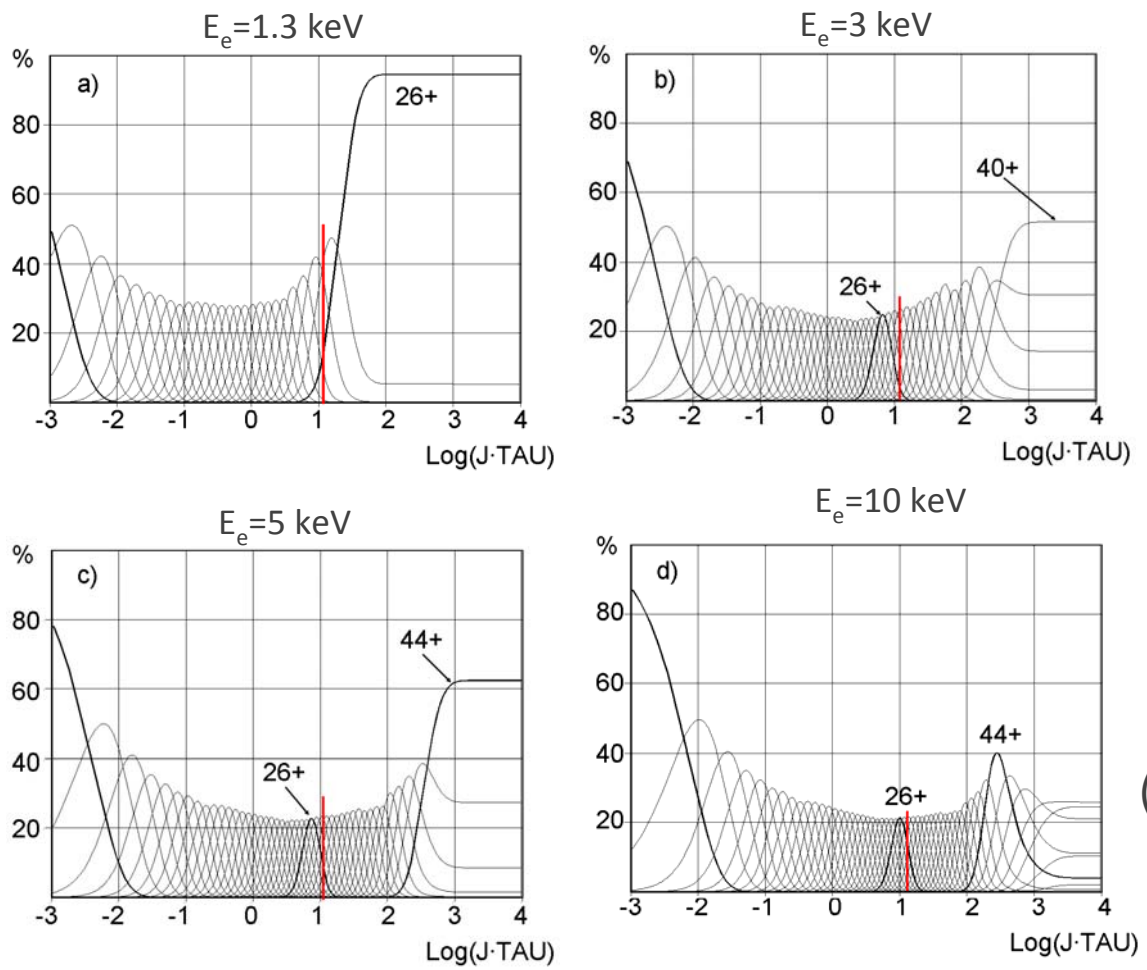

Red line – Log(J·τ) = 1.18
(J = 500 A/cm^2, τ = 30 ms)

- Lower electron beam energies provide higher abundances of ions
- Lower rep-rates are beneficial for higher abundances of ions

Breeding efficiency measurements at BNL T-EBIS

- Injected ions - $^{133}Cs^{+}$ ↔ extracted ions - $^{133}Cs^{22\text{-}25+}$
  - pulse duration – about 10 μs
  - current – 0.1-1 μA
  - number of ions per pulse – 10^7-10^8
  - 4 rms normalized emittance is ~0.02 π mm·mrad

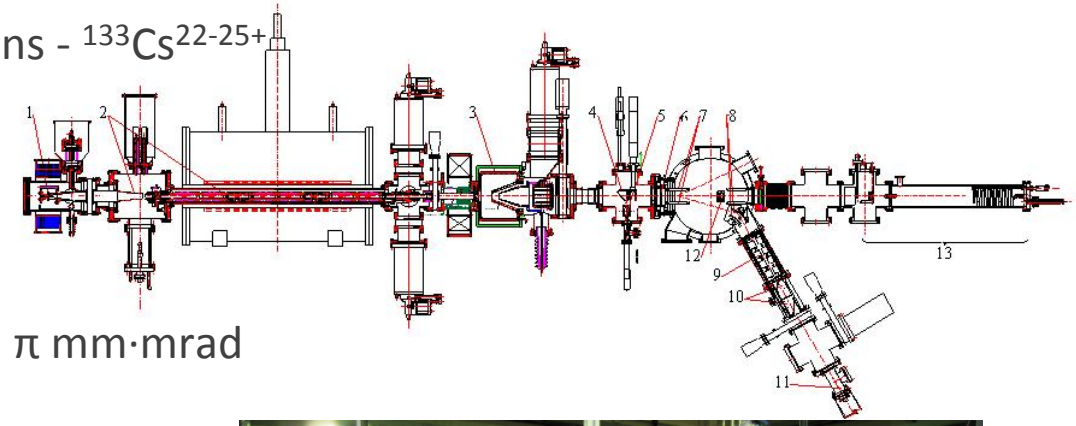

- Charge breeding efficiency
  - electron beam size (by adjusting the ratio of solenoid and e-gun magnetic fields)
  - electron beam current (by adjusting cathode-anode voltage)
  - electron beam energy (by adjusting drift structure electrodes potentials)

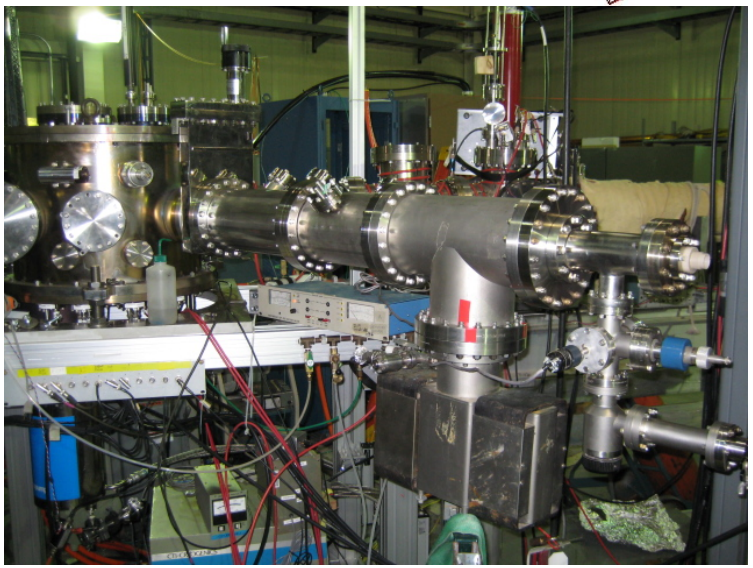

- Optimization of breeding efficiency on ion beam injection parameters (energy, size, angle)
- Comparison of experimental results with results of numerical simulations

ATLAS Efficiency and Intensity Upgrade -Phase II

- New accelerator technology (including SRF) offers
  - Factor of 3-4 higher accelerating gradients – creates real estate available for experimental equipment
  - Reduces number of RF resonators – increased operational reliability
  - Newer resonators –increased operational reliability
  - Eliminates beam halo formation and losses thanks to larger aperture and automatic beam steering correction
  - New SC resonators are capable to accelerate ~1 mA ion beams
- Superconducting ECR is required to generate higher intensity beams
- Higher efficiency EBIS charge breeder is required for CARIBU beams
- Available space can be used to install high-intensity target and in-flight separator

ATLAS Layout after Phase II upgrade

- Add one more cryomodule, β_G=0.077
- Relocate SRF test Facility
- EBIS: complete installation and commissioning
- ATLAS infrastructure improvement
- Tandem decommissioning
- In-flight beam separator, high-intensity targets
- New CARIBU source transfer Facility
- High-intensity ECR

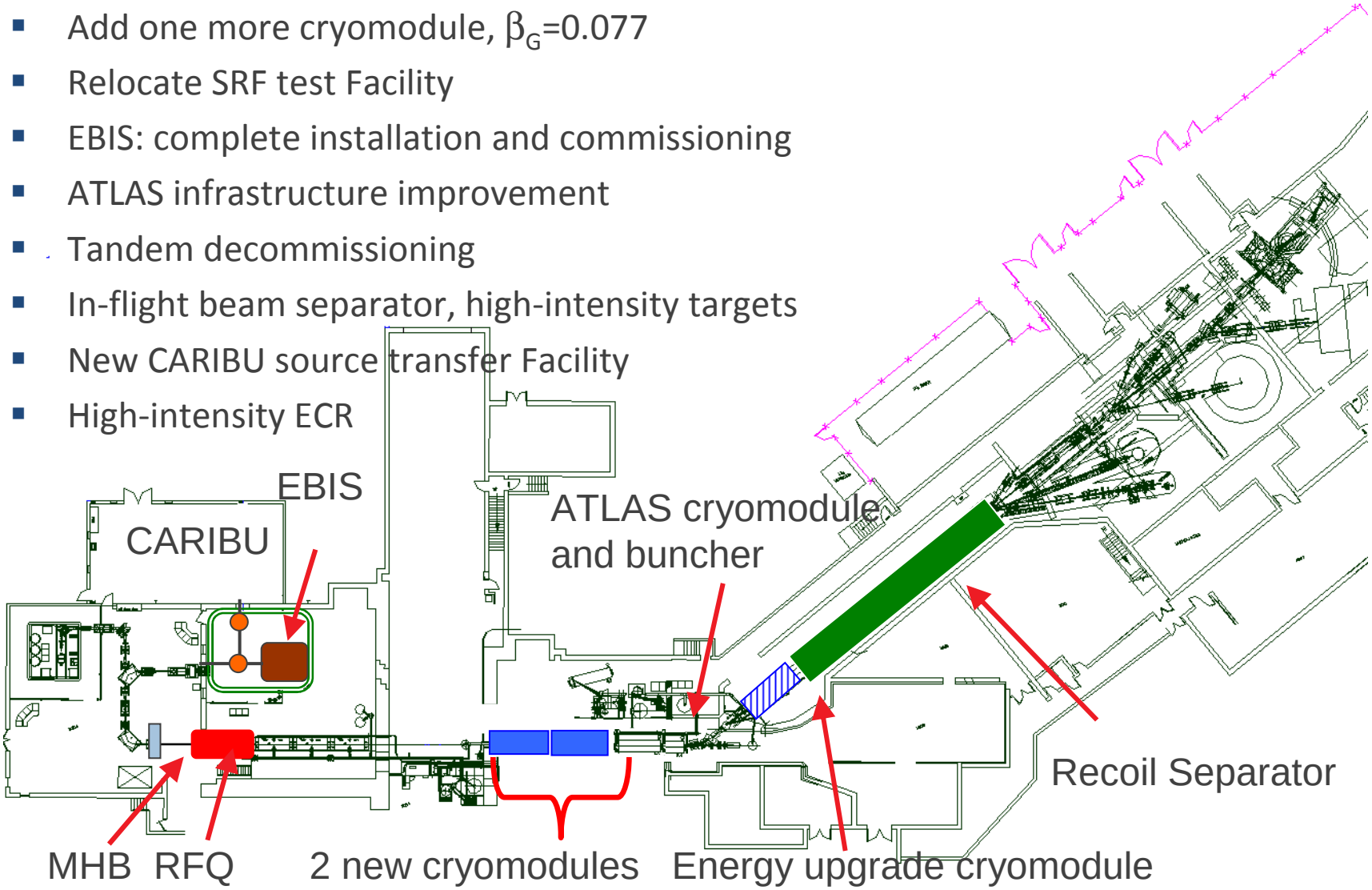

In-Flight Separator

- Angular acceptance of ± 50 mrad in both x and y, a momentum acceptance of ± 5% and a maximum rigidity of 1.5 Tm
- The RF sweeper adds time-of-flight selection to the achromatic momentum selection, effectively providing a coarse mass selection for the recoils
- The SC debuncher reduces the energy spread of the recoil beam
- 2 orders of magnitude gain in intensity for the in-flight produced secondary beams
  - Improve the collection efficiency of the recoils by a factor of at least 10 over the existing system
  - new high-power target station will allow a factor of 10 higher beam intensity on target.

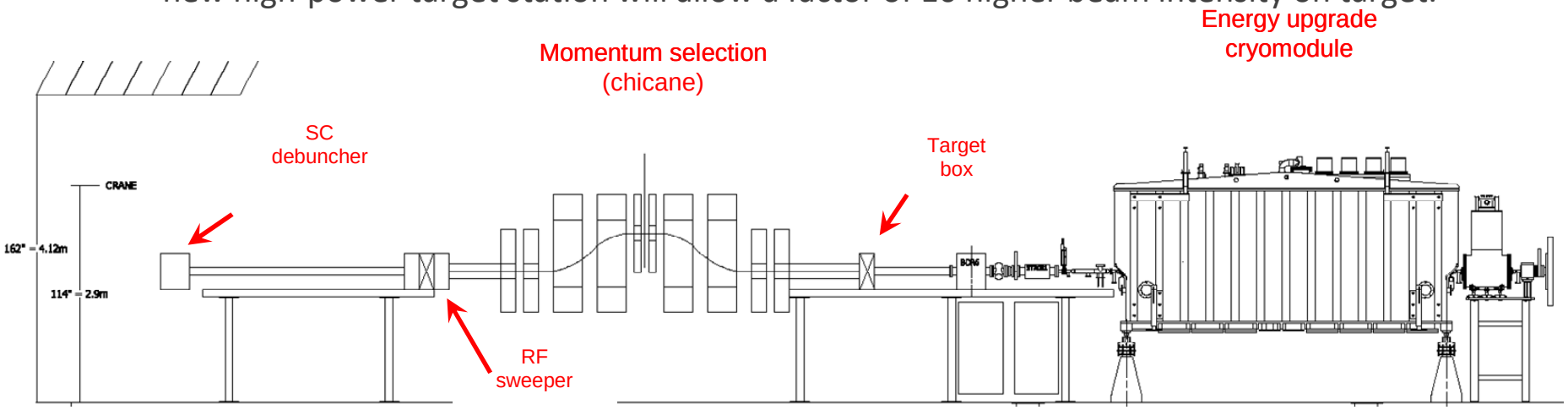

Conclusion

- Appreciable funds have been assigned for the ATLAS Upgrade
- ATLAS future is considered as the National User Facility for Intense Stable Ion Beams