Materials Test Station Status

Charles Kelsey, Ron Selvage, Eric Pitcher and Dan Seely

Los Alamos Neutron Science Center

Los Alamos National Laboratory

2011 DOE Accelerator Safety Workshop

September 20-22, 2011

Operated by Los Alamos National Security, LLC for the U.S. Department of Energy's NNSA

Overview

- Mission need
- Design and operation
- Radionuclide inventories
- Preliminary hazard analysis
- Applicability of nuclear facility requirements
- Safety basis strategy

Los Alamos NATIONAL LABORATORY EST. 1943
Operated by Los Alamos National Security, LLC for the U.S. Department of Energy's NNSA

Need for domestic fast spectrum irradiation capability

- **Fast Neutron Test Capability Mission Need Statement (Nov '07):**

  "…to address the need for a domestic source of fast neutrons and to enhance nuclear science and engineering capabilities, the following mission needs must be met:
  - A fast-spectrum neutron irradiation capability for the safe testing of advanced fuels and materials in an environment prototypical of fast spectrum reactors.
  - A fast neutron user facility to support university researchers and other DOE programs."

- **The Materials Test Station (MTS) can provide DOE-NE with a fast spectrum test capability in four years for about $90M.**

- **MTS flux level will be one-third to half that of the world's most intense research fast reactors.**

- **"Fast Neutron Test Capability" CD-0 approved Nov 2007; MTS was one of three alternatives identified to meet mission need.**

LANSCE and proposed MTS location

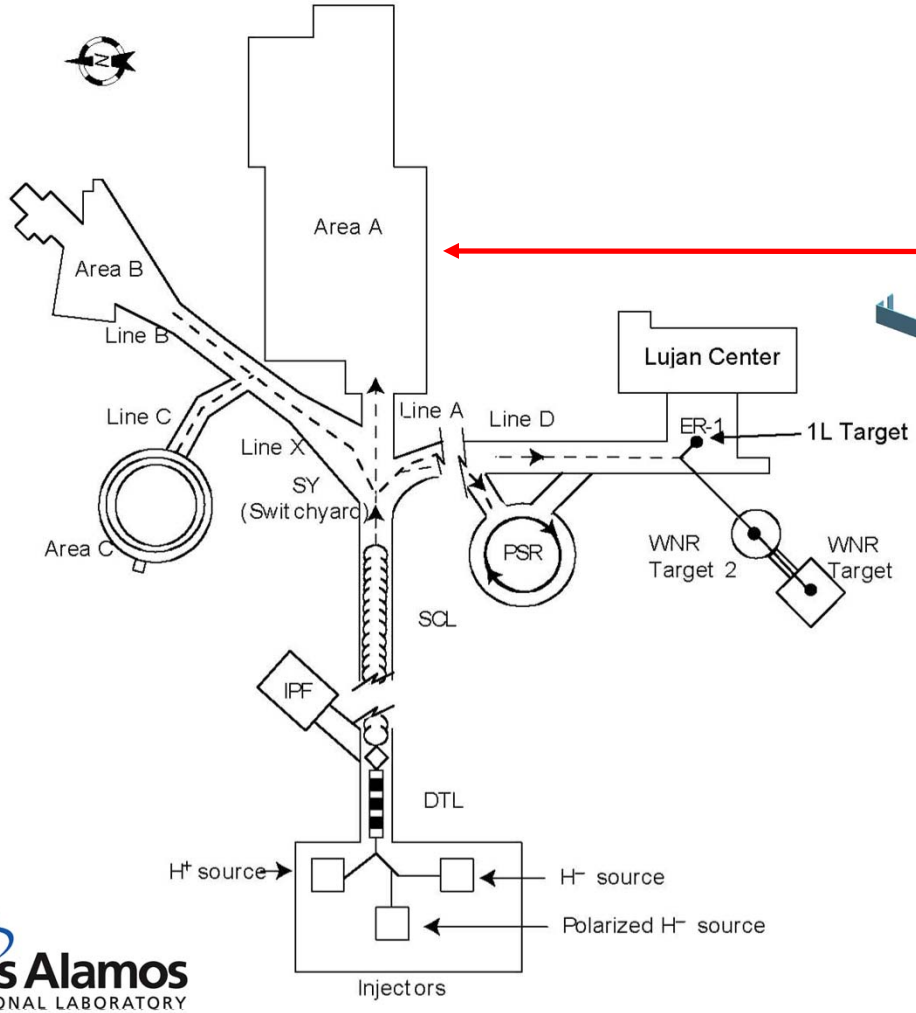

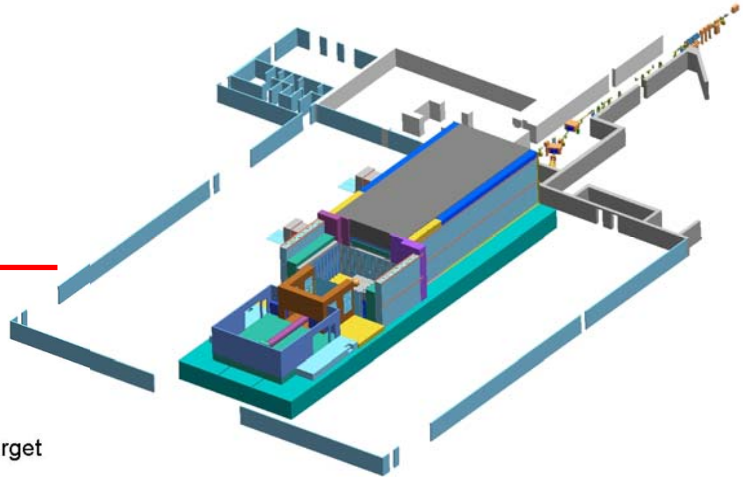

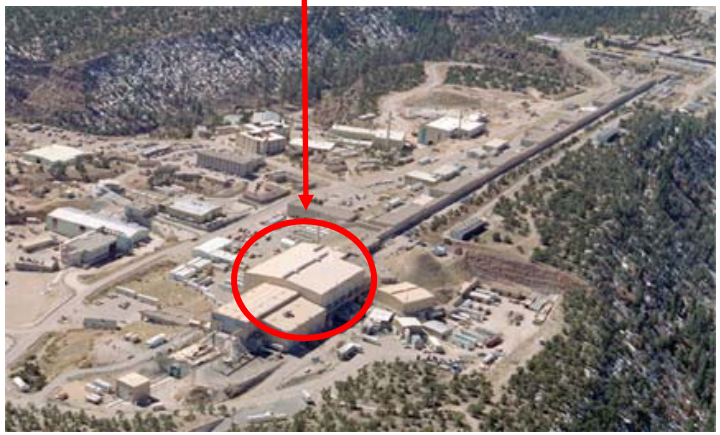

Los Alamos NATIONAL LABORATORY EST. 1943
Operated by Los Alamos National Security, LLC for the U.S. Department of Energy's NNSA

Horizontal cut through the MTS target assembly at beam centerline – MCNP(X) model

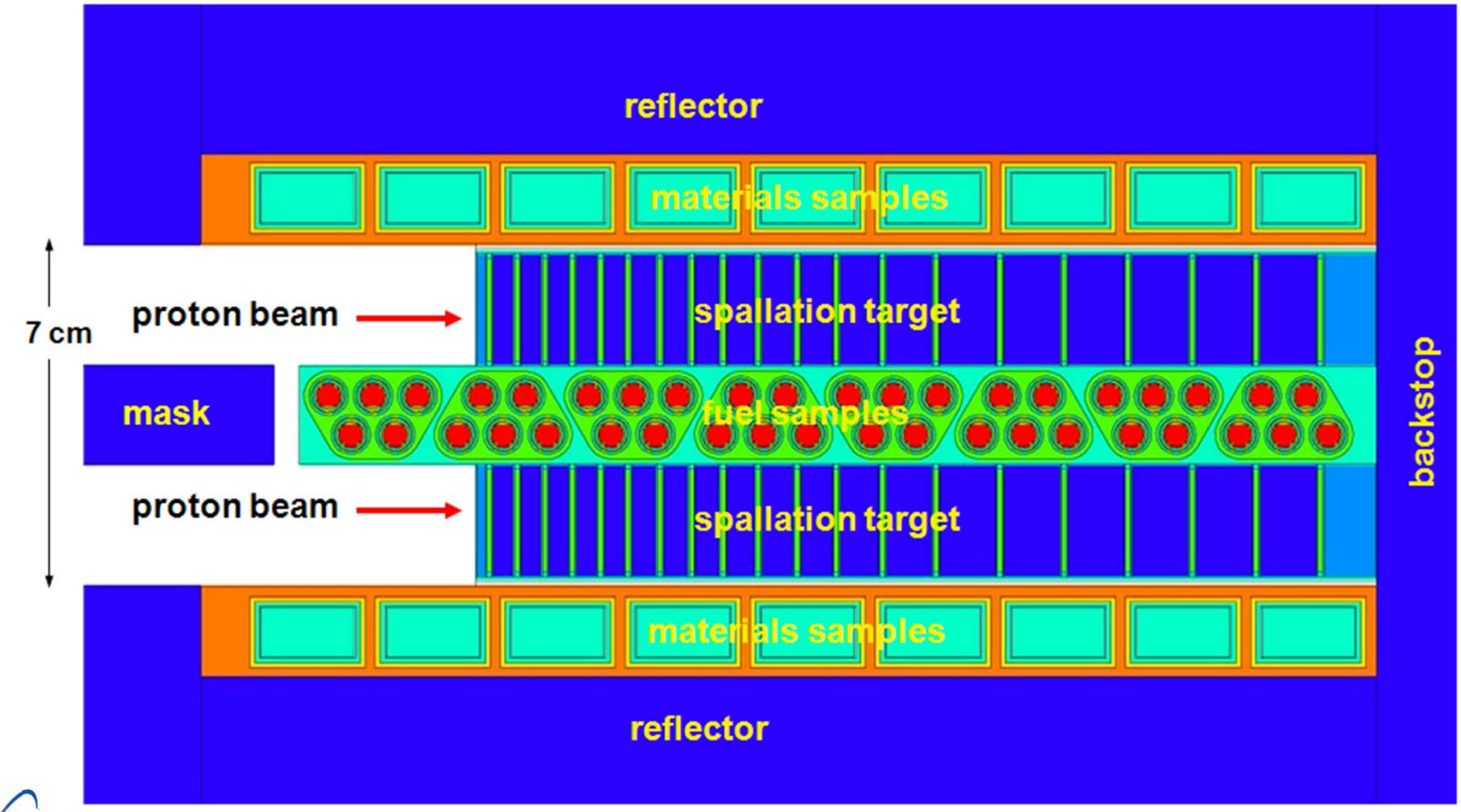

Los Alamos NATIONAL LABORATORY EST. 1943
Operated by Los Alamos National Security, LLC for the U.S. Department of Energy's NNSA

MTS design includes all services needed to maintain target and change out samples

- **Independent fuel rodlet and sample can removal allows for short or long term irradiations.**
- **Irradiated rodlets can be loaded into pits in the service cell floor to cool.**
- **Irradiated samples are transferred to shipping casks in the service cell.**

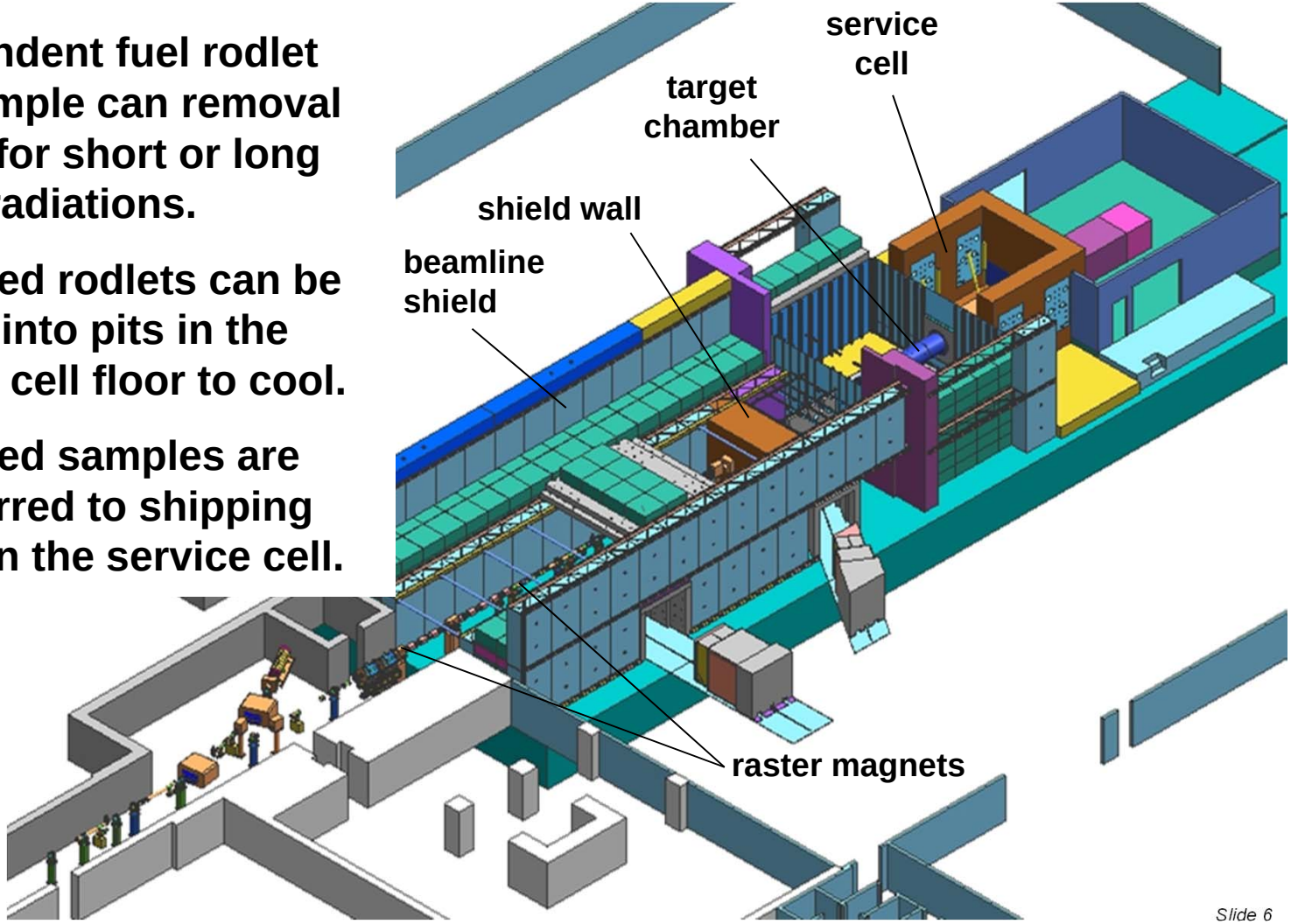

Los Alamos NATIONAL LABORATORY EST. 1943
Operated by Los Alamos National Security, LLC for the U.S. Department of Energy's NNSA

Fuel rodlet irradiation procedure

- Fuel rodlets manufactured and/or inspected at LANL PF-4
- Rodlets are loaded into baskets and transported to TA-53 where they are received in the MTS service cell
- Baskets are loaded into the fuel module that is part of the MTS target assembly, and the assembly moved into its irradiation position
- Rodlets are irradiated for a period prescribed by the experimenter
- Irradiated target assembly is pulled back into the service cell
- Fuel module is opened up and rodlet baskets are removed and, if needed, placed in a cooling pit in the service cell floor
- Once acceptably cool, rodlets are loaded into shipping containers and shipped offsite for post-irradiation examination

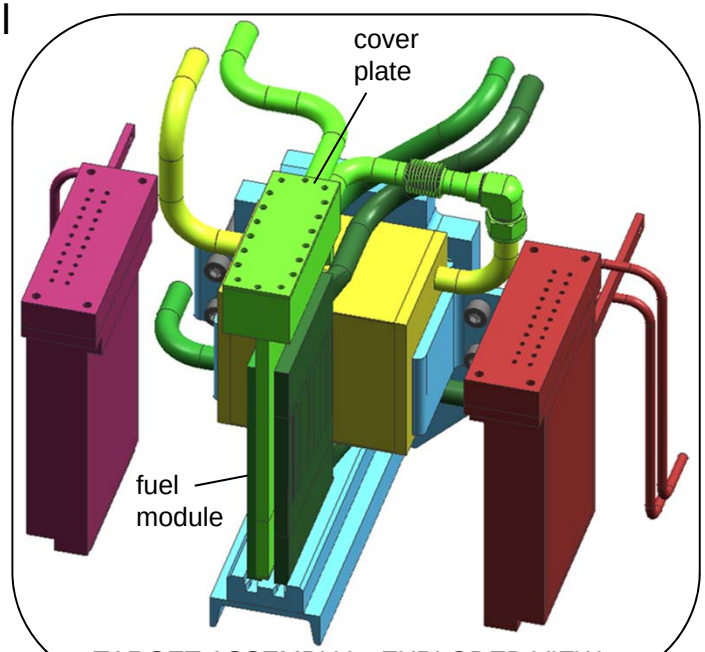

TARGET ASSEMBLY – EXPLODED VIEW

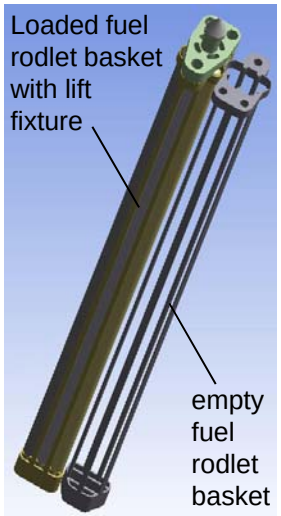

Material sample irradiation procedure

- Experimenter manufactures miniature test specimens of advanced alloys and ships them to LANL
- Specimens are loaded into sample cans
- Sample cans are loaded into materials modules that are part of the MTS target assembly
- Target assembly is irradiated for a period specified by experimenter

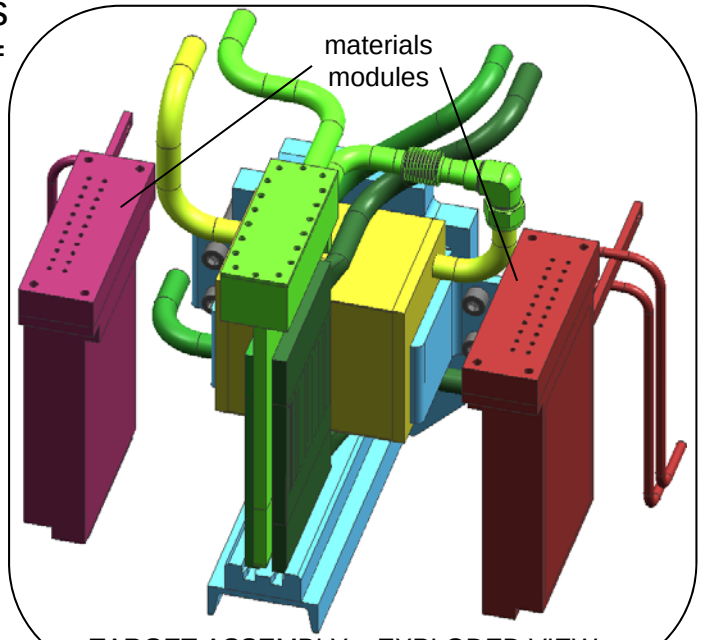

TARGET ASSEMBLY – EXPLODED VIEW

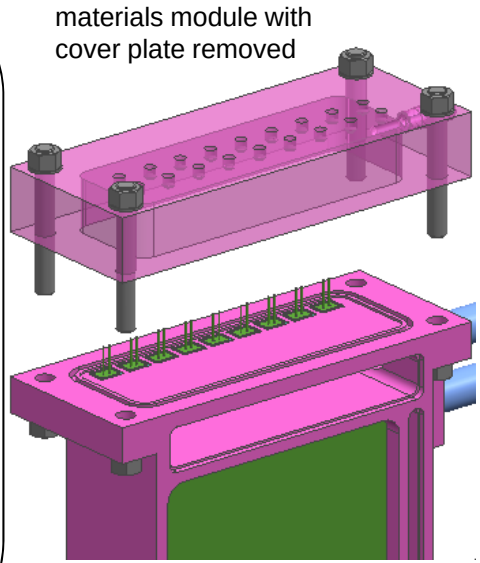

- Irradiated target assembly is pulled back into service cell
- Sample cans are remotely removed from the materials module and, if needed, placed in pits to cool
- Once cooled, sample cans are loaded into shipping casks for transport to post-irradiation examination facility

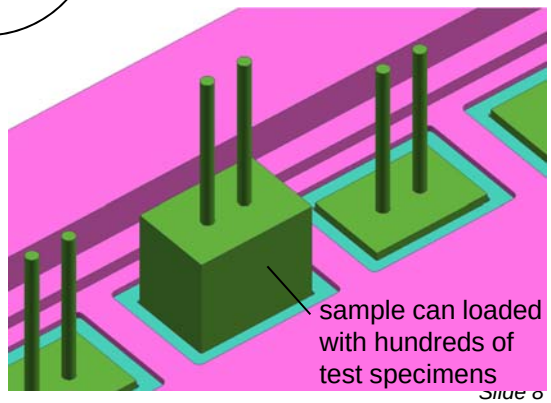

Los Alamos NATIONAL LABORATORY EST. 1943
Operated by Los Alamos National Security, LLC for the U.S. Department of Energy's NNSA

Typical actinide inventory during MTS operation

- Actinide inventories will be administratively controlled to stay within established Safeguards and Safety Basis limits
- A typical fully loaded fuel module will consist of 40 rodlets, each with a fuel stack height of ~5 cm
- Each rodlet has about 10 g of actinides, or 400 g total in a fuel module
- An example transmutation fuel actinide composition includes:
  - 65% uranium (260 g)
  - 30% plutonium (120 g)
  - 3% neptunium (12 g)
  - 2% americium (8 g)
- As many as 3 fuel modules may be placed in the MTS at one time:
  - a fresh module ready to be installed for the next irradiation cycle
  - one module being irradiated
  - one irradiated module cooling in the pit of the service cell floor

Bounding radionuclide inventory for MTS from PHA

- Total bounding activity is 4.1 MCi.
- Calculated assuming continuous 800 MeV proton beam delivery to the MTS target at 1.35 mA for one year for the target assembly (i.e., tungsten target, fuel assembly, and material sample regions) and 2.5 years for other regions.
- The calculated radioactivity and associated dose conversion factors (DCF) are used to make preliminary assessments of radiological consequence, and in selecting the recommended candidate accidents to be analyzed in PSAD.

Region	Total Activity [Ci]	Total Mass [g]	DCF [rem·m³/(g·s)]
Fuel Assembly	5.09E+05	8.32E+03	5.96E+02
Target Assemblies	7.49E+05	2.41E+04	3.58E+01
Sample Assemblies	6.57E+04	6.94E+04	1.33E+00
Reflector Materials	1.40E+06	1.95E+06	3.03E-01
Beamstop Assembly	7.93E+05	5.37E+05	6.26E-01
Bulk Shielding	4.99E+05	7.35E+09	4.15E-05
Coolant (LBE)	8.34E+04	1.63E+05	9.32E+01

Radionuclide Inventory for LBE Coolant Option

PHA evaluated heavy water and LBE coolant options

- **The hazard evaluation process considered various "what if/outcome" scenarios, and qualitatively ranked their**
  - frequencies
  - consequences
  - risks
- **Major risk events were identified to be used in establishing the specific design basis accidents (DBAs) which must be evaluated in the PSAD**
  - 18 major events for the heavy water coolant option.
  - 8 major events for the LBE coolant option.
- **LBE has fewer than water due to the benign interaction between tungsten and LBE**
- **PHA submitted to LASO in spring 2008; SER with "conditions of approval" issued by LASO in Dec 2008**

LASO conditions of approval for PHA – Condition 1

- **Include DOE-STD-3009 compliant hazard analysis in subsequent PSAD (and eventual SAD).**
  - *Hazard analysis with the technical rigor required by DOE-STD-3009 will be performed.*
- **Address the "Expectation that the controls that are identified to provide significant risk reduction to the worker be designated as Safety Significant Controls."**
  - *LANL will identify controls to provide significant risk reduction to the worker.*
  - *LANL will retain the nomenclature from the existing Accelerator Safety Envelope (ASE).*

LASO conditions of approval for PHA – Condition 2

- **Include DOE-STD-3009 compliant accident analysis in subsequent PSAD (and eventual SAD).**
  - *Accident analysis with the technical rigor required by DOE-STD-3009 will be performed.*
- **Address the "Expectation that the controls that are identified to provide significant risk reduction to the public be designated as Safety Class Controls. The controls are expected to appropriately address the hazards, be highly reliable, be effective, and be commensurate with the conclusions of the analysis in the PSAD."**
  - *LANL will identify controls necessary to protect the public from potential risk of the exposure to nuclear materials. The controls will be appropriately address the hazards, be highly reliable, be effective, and be commensurate with the conclusions of the hazard analysis.*
  - *LANL will retain the nomenclature from the existing ASE.*

LASO conditions of approval for PHA – Condition 3

- **Provide a risk/cost/benefit analysis comparing the lead-bismuth eutectic (LBE, which has potential for Po-210 buildup) and heavy water coolant options.**
  - *LANL will perform the analysis to:*
    - *Help resolve the feasibility of using LBE as a coolant.*
    - *More fully develop the potential risk associated with tritium buildup in the heavy water coolant option.*
    - *Enable full development of controls to address the safety concerns associated with each coolant option.*

Regulatory framework for LANSCE operations

- **LANSCE is currently operating in compliance with the 420.2C regulatory framework.**
  - The LANSCE Safety Basis (TA-53) is comprised of a Safety Assessment Document (SAD) and Accelerator Safety Envelope (ASE).
- **Both the SAD and the ASE will be updated to include MTS operations.**
  - Utilizes credited engineering and administrative controls for public/worker safety. Quality levels are determined by applying the LANL Conduct of Engineering Manual (i.e. ML-1, 2, 3, 4).

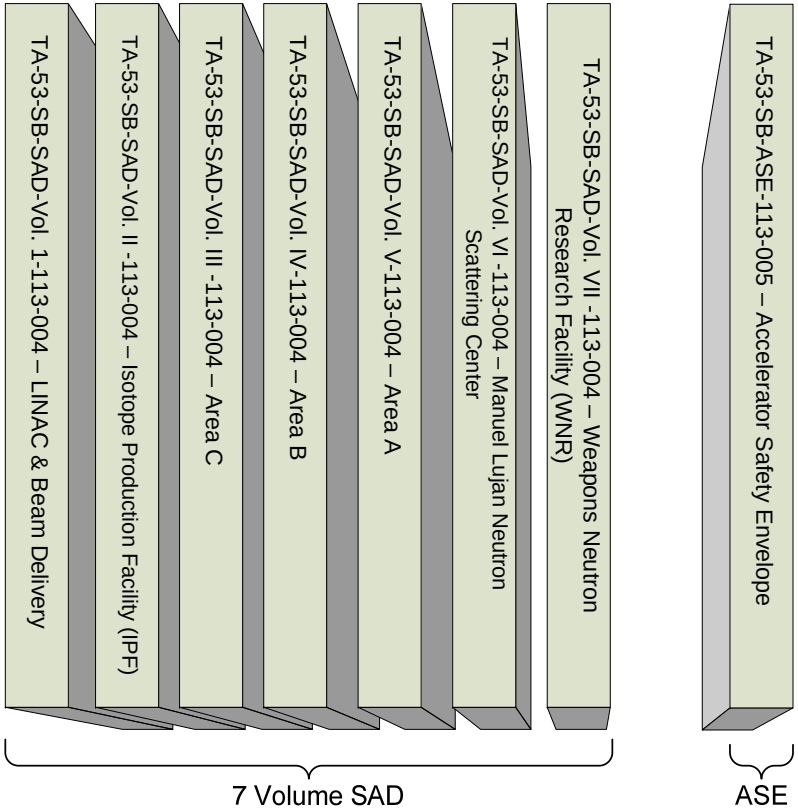

Los Alamos NATIONAL LABORATORY EST.1943
Operated by Los Alamos National Security, LLC for the U.S. Department of Energy's NNSA

Applicability of nuclear safety requirements

- **LASO concurred that there was no potential for criticality at MTS and plan in 2008 was to develop safety basis in accordance with DOE O 420.2B and PHA conditions of approval.**
- **At same time NNSA HQ began developing guidance and expectations that said:**
  - *If an activity was going to develop, use, or store radiological materials exceeding HC2 thresholds, and involving an NNSA accelerator, NNSA would require that activity to be conducted as a HC2 nuclear activity and meet the requirements associated with a HC2 facility.*
- **DOE GC told NNSA HQ that:**
  - *While 10 CFR 830 does not require such activities (since they legitimately are using the accelerator) to fall under its provisions, we are free to impose stricter restrictions than those required by the rule.*
- **MTS was not funded from 2008 through 2010 and NNSA HQ did not issue its guidance and expectations.**

Applicability of nuclear safety requirements continued

- **MTS was again funded in 2011 and work resumed on CD-1 package.**
- **NNSA HQ resurrected its guidance and expectations and requested CTA establish whether or not MTS will need to be operated as HC2.**
- **Draft CTA memorandum on "Guidance and Expectations on the Applicability of 10 CFR Part 830 to Accelerators" was circulated for review by LASO and LANL.**
- **Meetings between NNSA HQ, LASO and LANL were held to discuss concerns:**
  - Rigor of analysis and robustness of controls thought to be greater under nuclear regulatory framework.
  - Challenges of operating an accelerator facility under two regulatory frameworks.
- **Outcome was that CTA memo was not issued but rather one from LASO to LANL requesting action on subject was.**

Request for action

- **LANL was asked to submit for LASO concurrence:**
  - *The strategy that will be used to develop the safety controls.*
  - *The appropriate set of nuclear safety requirements applicable to the Material Test Station, considering site procedures and the source documents listed below or their successors.*
    - *10 CFR 830, Nuclear Facility Management*
    - *DOE O 413.3B, Program and Project Management for Acisition of Capital Assets*
    - *DOE O 414.1C, Quality Assurance*
    - *DOE O 420.1B, Facility Safety (including criticality safety)*
    - *DOE O 425.1D, Startup and Restart of Nuclear Facilities*
    - *DOE O 426.2, Personnel Selection, Training, Qualification, and Certification Requirements for DOE Nuclear Facilities*
    - *DOE O 433.1B, Maintenance Management Program for DOE Nuclear Facilities*
    - *DOE O 422.1, Conduct of Operations*
    - *DOE STD-3009 (CN3), Preparation Guide for U.S. Department of Energy Nonreactor Nuclear Facility Documented Safety Analyses*

Safety basis strategy document

- **Submitted to LASO on June 15, 2011**
- **Included:**
  - Strategy for developing safety controls at the MTS
  - Discussion of the nuclear safety requirements LANSCE will apply to the MTS
  - Defined the development of safety basis documents and their schedule for development as tied to Critical Decisions (CD) for the MTS Project
- **LASO concurred on August 6, 2011**

Strategy for controls selection

- **Based on LANSCE-PS-113-001.R1, *Policy for Selection of Safety Related Credited Controls***
- **Policy contains a strategy for selecting controls based on the risk to the public and worker**
  - Higher consequence accidents require two controls.
  - Moderate consequence, but frequent accidents also require a control.
  - Policy covers both radioactive and chemical consequences.
- **Safety-Significant and Safety-Class designations not used**
- **Controls that protect the public are designated as ML-1**
- **Controls that protect the worker are designated as ML-2**

Nuclear safety requirements applied to MTS

- **Applied a cross-walk of the 9 Nuclear Facility Orders/Standards in request for action to the processes implemented at LANSCE**
- **LANSCE either implements these requirements, or implements an equivalent process with the caveat that:**
  - The safety basis document will be a SAD with an Accelerator Safety Envelope (ASE), in place of a Documented Safety Analysis (DSA) with Technical Safety Requirements (TSRs), and
  - The SAD will not identify SS and SC controls. Following LANL Institutional Engineering Procedure AP-341-502, *Management Level Determinations*, any engineered controls that protect the public are listed as ML-1 SSCs, and any engineered controls that protect the worker are listed at ML-2 SSCs, just as SC and SS controls are listed.

Nuclear safety requirements applied to MTS continued

- **10 CFR 830, *Nuclear Safety Management***
  - MTS implements an equivalent process.
  - Hazard and Accident Analysis are written to SPB-114-2 which is the LANL implementing document for DOE-STD-3009.
  - An Unreviewed Safety Issue Process is used in Place of the Unreviewed Safety Question Process.
- **DOE O 413.3B, *Program and Project Management for Acquisition of Capital Assets***
  - Implements Order with the exception of DOE-STD-1189. The safety-by-design intent is implemented through DID and Integrated Safety Management (ISM) strategies.
  - Equivalent safety documents will be developed.

Nuclear safety requirements applied to MTS continued

CD	Safety Document in DOE O 413.3B	Safety Document for MTS
CD-1	Code of Record	Applicable Codes and Standards
	Safety Design Strategy	Safety Basis Strategy
	Conceptual Safety Design Report	Preliminary Hazards Analysis
	Conceptual Safety Validation Report *	Safety Evaluation Report*
CD-2	Preliminary Safety Design Report	Hazards Analysis
	Preliminary Safety Validation Report*	Safety Evaluation Report*
CD-3	Preliminary Documented Safety Analysis	Preliminary Safety Assessment Document
CD-4	Documented Safety Analysis	Safety Assessment Document
	Operational Readiness Review	Accelerator Readiness Review

Nuclear safety requirements applied to MTS continued

- **DOE O 414.1C, *Quality Assurance***
  - MTS will implement the requirements for a non-nuclear high hazard facility in accordance with SD330*, LANL Quality Assurance Program.*
- **DOE O 420.1B, *Facility Safety***
  - The MTS will implement the nuclear facility specific controls in this Order with the exception of implementing the requirements in DOE-STD-1189. The intent of DOE-STD-1189 will be met to insure that safety is integrated into the design.
- **DOE O 425.1D, *Verification of Readiness to Startup and Restart of Nuclear Facilities***
  - The MTS will implement the applicable elements of startup and restart from DOE O 425.1D in a new LANL procedure.

Nuclear safety requirements applied to MTS continued

- **DOE O 426.2, *Personnel Selection, Training and Qualification, and Certification Requirements for DOE Nuclear Facilities***
  - LANSCE program is substantially equivalent to DOE O 426.2.
- **DOE O 433.1B, *Maintenance Management Program for DOE Nuclear Facilities***
  - The LANL Conduct of Maintenance (CoM) program requirements for non-nuclear high-hazard facilities will be applied. The only deviation is that the nuclear facility requirement for maintenance history is not required for non-nuclear high hazard facilities.
- **DOE O 422.1, *Conduct of Operations***
  - MTS will be fully compliant with the eleven requirements for a high hazard facility. In addition, the CoO program for the MTS will be substantially equivalent to the remaining seven chapters applicable only to a nuclear facility.

Nuclear safety requirements applied to MTS continued

- **DOE STD 3009, *Preparation Guide for U. S. Department of Energy Nonreactor Nuclear Facility Documented Safety Analysis***
  - The MTS will implement the content requirements of SBP114-2, with the exception of hazard categorization.

MTS safety analysis approach

- **MTS safety basis team has considerable nuclear experience in developing nuclear hazards analyses and DSAs.**
- **PSAD will include analysis of broad spectrum of accident types:**
  - Loss of coolant accidents (LOCAs)
  - Beam spills (prompt radiation hazards)
  - Remote handling accidents
  - Load drops
  - Internal fires
  - Internal explosions
  - Criticality accidents (Note: CSE is anticipated to confirm that criticality accidents are incredible; < 10-6 per yr)
  - NPH events
  - External events
  - Unique SIHs that can lead to a hazardous material (radiological or toxicological) release

MTS safety analysis approach continued

- **Rigorous unmitigated accident analyses will result in a robust control set that will result in a high degree of safety that will be equivalent to level of safety for DOE non-reactor nuclear facilities. For example, it is anticipated that the PSAD will indicate the need to incorporate the following "equivalent" safety class controls:**
  - Engineered beam shutdown system
  - Engineered active decay heat removal system
  - Onsite emergency power system for critical pumps and controls
  - Coolant flow sensors, leak detection, and HEPA filtration capability
- **Additionally, the combination of redundancy, diversity, and compartmentalization of safety systems will provide protection against common mode and common cause failures.**

Conclusions

- **MTS will meet the fast neutron test capability mission need.**
- **MTS will be designed and operated as an accelerator facility under DOE O 420.2C.**
- **Safety basis for the MTS is developed using the same methodology and rigor as a nuclear facility safety basis.**
- **Engineered controls for the public and workers receive the same ML designation as Safety-Class and Safety Significant Controls.**
- **LANL applies equivalent processes to accelerators as many of the DOE Orders applicable to nuclear facilities.**