Accelerator Control at IHEP

Jijiu Zhao, Li Ma, Hao Zhang, Xiaosong Geng,
Yulan Yu, Tongyan Zhai, Shuming Tang, Pengda Gu,
Institute of High Energy Physics, Chinese Academy of Sciences
P.O.Box 918(10) Beijing 100039, China

Abstract

The Institute of High Energy Physics (IHEP) of the Chinese Academy of Sciences, completed the construction of the Beijing Electron Positron Collider (BEPC) in October, 1988. The purpose of the BEPC is mainly to carry out research on the Charm and τ lepton physics for which good physics result have been obtained. The BEPC control system was upgraded in spring 1996. This upgrade includes the reconstruction of the control system's main architecture and of several PC-based local control stations. This paper descibes the facilities at IHEP and presents the status of the BEPC control system.

1 Introduction

There are several high energy physics facilities at the Institute of High Energy Physics, Beijing. The most important one is the Beijing Electron Positron Collider (BEPC), which is a National Laboratory in China that serves physics experiments and synchrotron radiation applications. It consists of a 1.4 GeV linac, two transport lines and a 2.8 GeV storage ring. The BEPC control system's upgrade was part of the improvement program of the BEPC's luminosity. This upgrade aimed at improving the response time of the control system and at more reliable performances. Todate the new BEPC control system has been running safely and reliably and the upgrade is crowned with success.

The data acquisition system for the Beijing Spectrometer (BES) was upgraded with a VME-CAMAC system that collects data from 20,000 signal channels. The old VAX785 computer and its VCC adapter have respectively been replaced by a DEC Alpha server and the VME system. The tracks of the particles in the detectors are shown on the spectrometer console that performs the data recording and the on-line analysis of the detected particles.

The Beijing Synchrotron Radiation Facility (BSRF) includes 7 beam lines to study the topography, EXAFS, diffuse scattering, and application research of hard X rays. Several PC computers are used for beam line controls, data acquisition, images capture and treatment.

The Beijing Proton Linac (BPL) facility consists of a 35 MeV proton linac, research facilities for fast neutrons cancer treatment, for the production of short-life isotopes for medical applications and experimental facilities for positron emission topography; these were completed in 1988.

The Beijing Free Electron Laser (BFEL) with a 30 MeV electron linac is used to carry out research on free electron laser in the IR region and provide applications.

This paper will focus on the BEPC control system.

2 The BEPC control system

The BEPC control system, built in 1987, has been running for 40,000 hours safely. It had a centralized architecture.

Some weak points appeared during this long run: poor CPU power of the unique VAX750 computer, impossibility to purchase some dedicated adapters that are no more produced by the manufacturer and the bottleneck of VAX-CAMAC-channel for the data communication. This threatened the reliability of the control system and imposed its upgrade. The upgrade started in an all-round way in 1993 and was completed in spring1996. [1]

2.1 Reconstruction of the system architecture and console

The upgraded control system adopts a distributed architecture with the IEEE802.3 Ethernet as data communication (Figure 1). Except for the low level CAMAC hardware, all of the high level control devices have been changed.

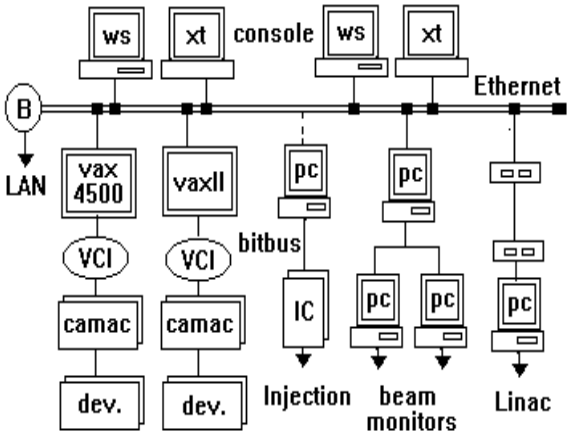

Fig. 1 The upgraded BEPC control system

The new console consists of two VAX 4090 workstations and two X-terminals; the old hardware console and its adapter Grinnell, VCC were eliminated. The new console manager was developed with X-Window, OSF/Motif, that has a friendly man-machine interface. A knob manager with a client-server mode provides a menu window for adjusting individual devices.

The VAX4500 computer system and Micro VAXII carry out the real-time controls for magnet power supplies, vacuum and RF cavities on the transport line and the storage ring of the BEPC. The old VAX750 computer has

been removed and the old dedicated VCC adapter replaced by a commercial product KSC 2922/3922, the system is thus easy to maintain. Several local PC-based control systems have been developed, some of which were connected to Ethernet to exchange data with the central VAX4500 server.

The control system software is divided in three layers: console manager, network communication and real-time controls in the FECs. A set of network library routines were developed to render all network communications transparent for the programmers. When the system starts up, the network manager creates several network links between the VAX4500, the console computers and the PCs to exchange data and commands. On the FECs, the data I/O routines were modified to fit the data format of the new hardware adapter, which collects raw data from 4,000 I/O signal channels and to refresh the database twice per second. The home made real-time database was rebuilt: it can however still be accessed as it used to be. The structure of the real-time database has been changed to incorporate a new global index list so that the original application programs can still read the raw data without having to change their original source code. The multi-task schedule program was adapted to the distributed environment. This upgrade was completed one year ahead on schedule and the new system was put into operation in October 1994.

2.2 PC-based local controls

2.2.1 Intelligent control for injection power supplies

There are ten sets of the magnet power supplies for the injection system in the storage ring, such as kickers and lambersons. Until 1996 the existing control system was a hardware one and the devices were controlled manually. Now an Intel PC/486 computer, running RMX for Windows operating system, is used as the main controller. The front-ends are eight Intel iRBC 44/10, 44/20 single board computers. Data communications between all nodes is done by the bit-bus. All signals are logged in the local data pool which is refreshed every two seconds. A number of application programs were developed including bit-bus data communication routines, data I/O programs, data scale procedures, device status display routines, the man-machine interface program, etc.. The operator can control the kicker and lamberson power supplies from the local console. The system will be integrated into the main control system in the near future. [2]

2.2.2 Computerized beam diagnostic system

The upgrade of the beam diagnostic and instrumentation system was carried out from the beginning of 1995 to mid 1996.[3] Before this upgrade, the system could only be used at the initial stage of the machine commissioning and operation as most beam monitoring systems had no interface to the BEPC main control computer. In order to improve the resolution, the speed and the reliability of the measurements and to automate the measurements, the beam diagnostic system was upgraded.

As can be seen in Figure 2, five PCs running Windows NT as operating system are added between the central computer layer and the device layer. Among them, theBIPC7 is used as the database server and data communication manager. All the measured beam parameters are stored in this database that can be accessed by the VAX computer and PCs via Ethernet. The LINPC1 selects the bucket and the BIPC6 connects the instruments, such as the HP3588A analyzer through an IEEE488 GPIB interface to measure the turn, the beam size and the bunch length. The orbit measurement and control was moved from the VAX computer to the BIPC4: the speed for reading the BPM data is now faster since the old DAC module was replaced by a fast one.

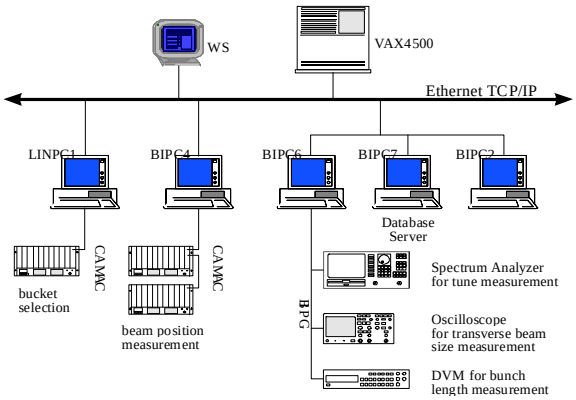

Fig. 2 The new Beam diagnostic system

2.2.3 New linac control system

Until 1995, the Linac devices were controlled manually. Several young colleagues of the Linac Division have worked on the construction of the linac control system, which is based on PCs.[4] It consists of six industrial PCs that act as front-ends to control and monitor the linac devices, such as the modulators with PLCs, the magnet power supplies, vacuum and the phase adjustment. The 10BASE-T net was chosen as the linac network links. There are two Ethernet cards in a PC server, one is connected to the IHEP campus LAN through which the linac data can be sent to the central control room. The other one is connected to the Linac local network. The PC server runs Windows NT and TCP/IP was chosen as the network protocol. The control programs were primarily developed using Turbo C under DOS platform: they are now being ported to the Windows platform using MS Visual C++.

2.3 Improving the safety interlock system and RF control with PLCs

The BEPC human safety and device interlock system has also been upgraded and has a multi-level structure based on PLCs as shown in Figure 3.[5] If anything goes wrong, an alarm signal is sent to the central console with a light turning red and a vocal message to warn the operator. One multimedia IBM/PC 586 act as the host computer of the PLCs and monitors the PLC system via a serial port COM2 and PC-links. The PC communicates with the central VAX4500 server and obtains operation messages from the

accelerator through a serial port COM3. The application programs on the host PC were developed with VC++ and the MS Win32 tool kits. Moreover, the system updates the BEPC operation message every 6 seconds and displays it on TV screens at the major BEPC entrances.

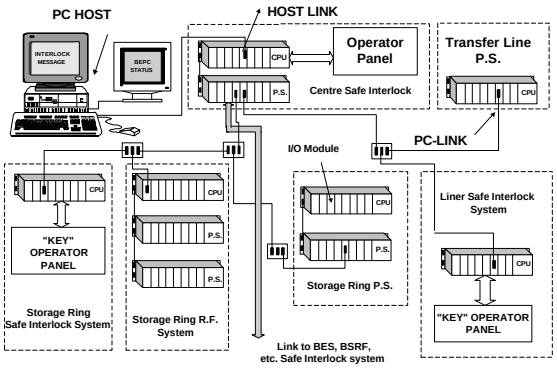

Fig. 3 New safety interlock system

In order to satisfy the requirements of the BEPC luminosity upgrade, two RF cavities were added in the storage ring; the RF local control system had thus to be modified accordingly. The single-chip microcomputer with 8031 CPU was adopted as the core of the controller which deals with the signals of that system. The PLCs provide the RF manual control units, making it easy to test the system. The major parameters of the RF devices are collected by CAMAC modules and sent to the central control room via optical fiber. The operator can now control the RF device both in the central and the local control rooms.[6]

3 The future

In recent years, two new projects in the field of high energy physics were proposed by the Chinese scientists. One is the construction of a new generation of synchrotron radiation facility in Shanghai (SSRF) which includes a 100 MeV linac, transport lines, a 2.2 to 2.5 GeV booster and a storage ring to serve the synchrotron radiation experiments. The other one is the Beijing T-Charm Factory (BTCF), which is a new electron positron collider with 1.5 to 3 GeV beam energy and which will reach a luminosity as high as $1x10^{33}$ cm^{-1} sec^{-1} at 2.0 GeV. The control group of BEPC undertook the feasibility study and conceptual design of the control systems for both facilities. [7] We hope that the R&D phase of the SSRF will start in the near future.

Acknowledgment

The authors would like to thank all their colleagues who contributed to the upgrade of the BEPC control system and to the new projects.

Reference

[1] J.Zhao et al. Conf. PAC 95 , Dallas May 1995
[2] H.Zhang et al. Conf. EPAC96
[3] J.Zhao, L Ma et al. Conf. CJ96 Chengdu, Oct. 1996
[4] P.D. Gu et al. Conf. ICALEPCS97 Beijing, Nov. 1997
[5] S.M. Tang et al. Conf. ICALEPCS97 Beijing, Nov. 1997
[6] H.Chan et al. Conf ICALEPCS95 Chicago, Nov 1995
[7] J.Zhao et al. Conf. ICALEPCS97 Beijing, Nov. 1997