Vacuum Chamber Options Design Review

Stainless Steel Four Weld Design

Presentation Prepared and Presented by:
J. Bailey
S.-H. Lee
D. Walters

Content

- Introduction
- Design
- Construction Development
  - Status of Prototypes
  - Measurements of Prototypes
- Production Preparations
- Schedule
- Cost
- Concerns & Open Issues
- Conclusions

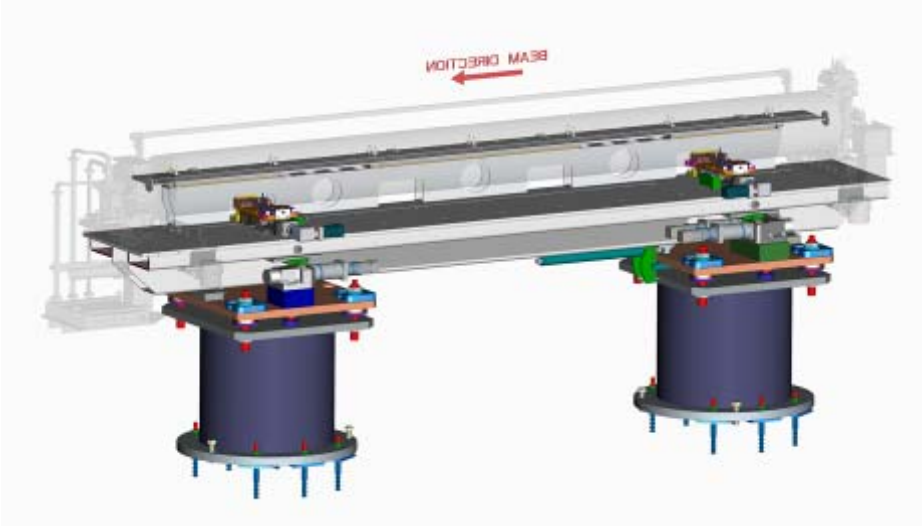

Introduction

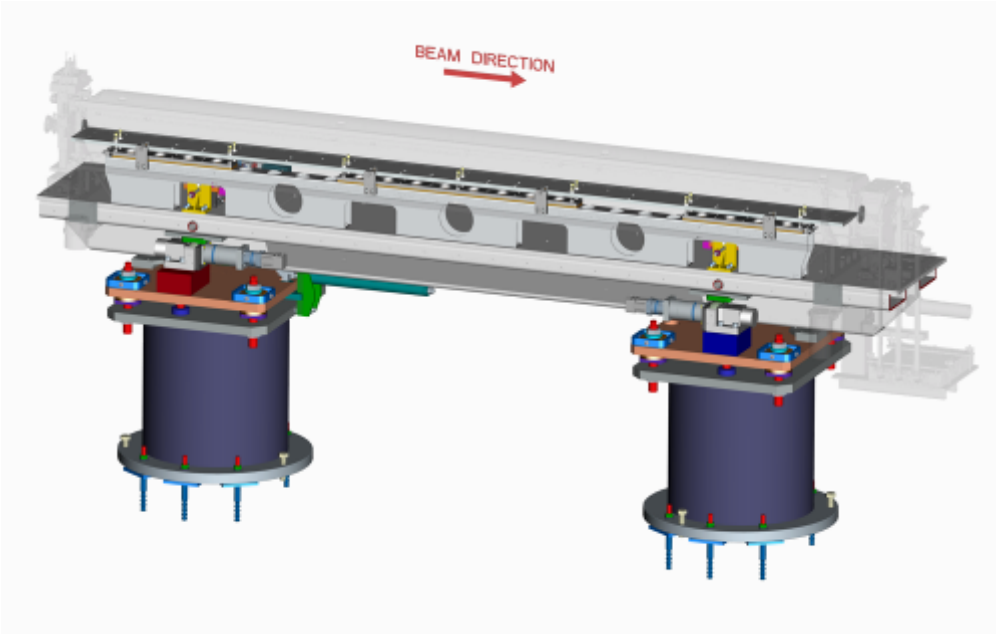

- The vacuum chamber is the conduit that the electron and photon beam travel through in the Undulator System.
- The Chamber must be self supporting since the Undulator will be removable.
- The walls of the chamber must be smooth to reduce the effect of Wakefields.
- The material on the wall interior is preferred to be aluminum to minimize the AC resistivity.
- The chamber must be straight for the beam to pass through and to fit up within the 6.8 mm Undulator gap
- The upper and lower walls need to be thin to have the largest possible beam clearance

Summary of Design Features

- The final design of the vacuum chamber is the result of an effort that was started in 2003. It has gone through changes reflecting ongoing research into AC conductivity, material availability, and fabrication.
- A significant characteristic of this design is the very high surface finish applied to the internal surfaces.
- The design uses flat strip side walls that can be inspected prior to welding. This feature allows selecting the best part to make the wall and avoid defective ones.
- The use of stainless steel as a base material for chamber construction has a number of advantages:
  - Handling of the chamber does not have to be as careful has some other materials since due to the high strength of stainless steel.
  - The alloys chosen for this application are some of the lowest permeability found in stainless steel.
  - The EVAC vacuum flanges can be directly welded to the chamber body.
  - Stainless Steel has many ways in which it can be repaired
    - Soldering with Sn-Ag-Cu alloy
    - Torch brazing with Ag alloys
    - Laser welded
- The aluminum coating is applied after the chamber has completed all its fabrication steps. This insures that all internal surfaces are coated.

Design

- Components
- Materials
- Permeability
- FE analysis
- Gap Spacing and Adjustment
- Drawing Status

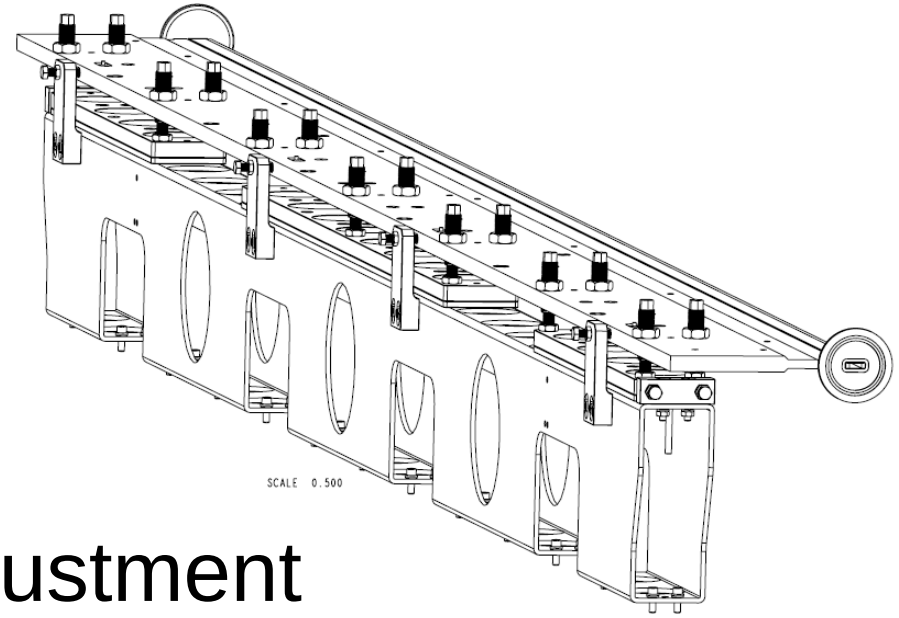

Production Vacuum Chamber Ass'y

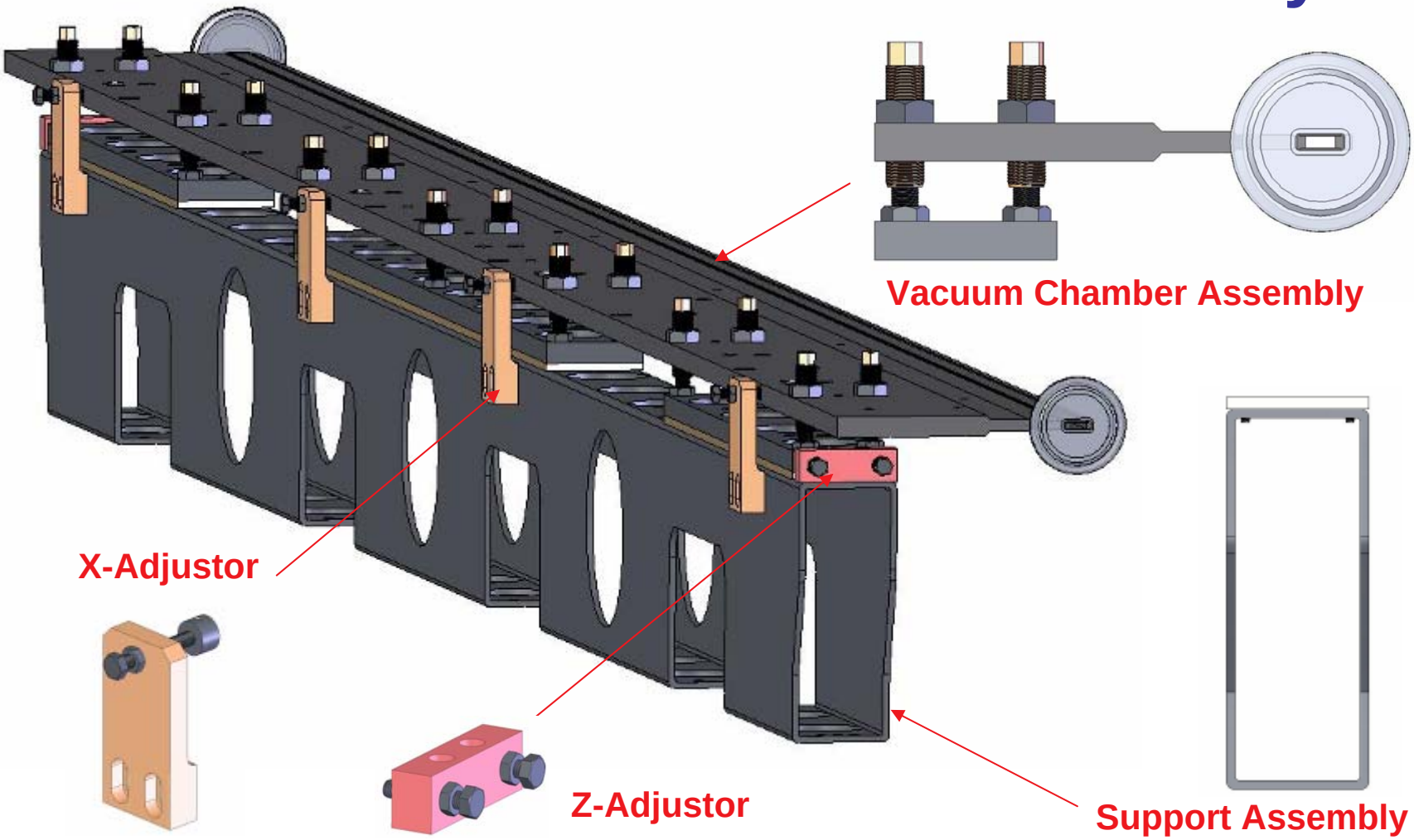

Vacuum Chamber Assembly

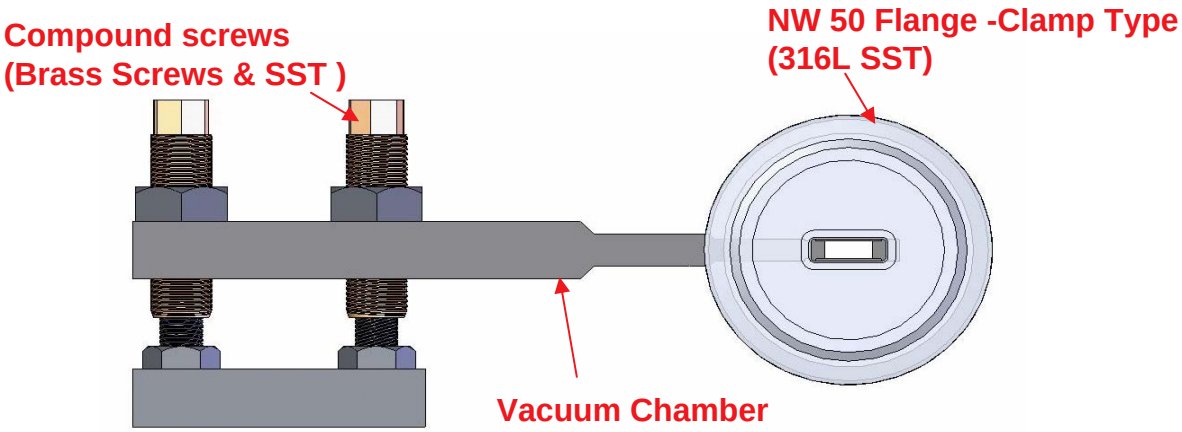

Prototype B Chamber

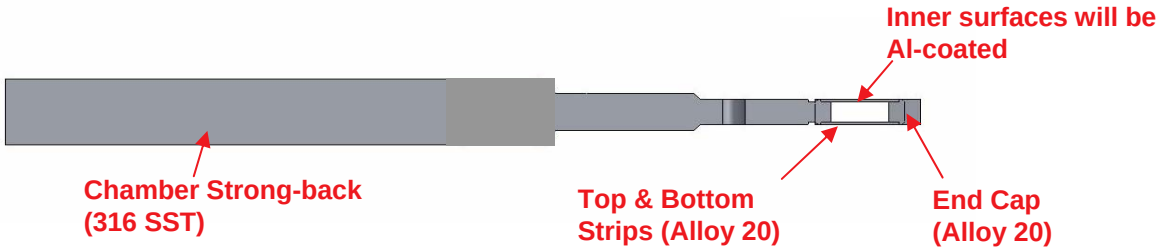

Prototype A &
Production Chamber

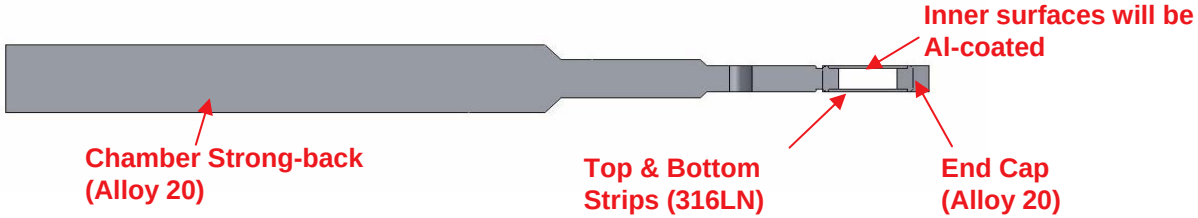

Vacuum Chamber Materials

Material	**Permeability (<1.010)**	**Weldability** (Heat Affected Zone)	**Machinability**	**Availability & Price**
316LN	Excellent	Medium	Harder than 304	N/A in the US Rebar has been the primary application
310S	Not good when as-received & welding		Similar to 304	Commercially Available in the US, Twice expensive than 316L
20Cb-3 ®	Good except annealing	Narrow		Commercially available in the US, Four times expensive than 316L
Nitronic 33 ®	Good except annealing & welding	Wide	Harder than 304	Need special order for production
Nitronic 40 ®	Good except welding			

Sample Chamber Permeability

(3" long sample chamber)

Material	As-received condition	After vacuum annealing	After machining & forming	After TIG welding	After final machining
316LN	1.002[a] (1.004[b])	1.003[a] (1.003[b])	1.003[a] (1.003[b])	1.004[a] (1.003[b])	1.008[c] (1.003[d])
310S	1.057[e] (1.005[f])	1.036[e] (1.003[f])	1.033[e] (1.003[f])	1.042[e] (1.018[f])	1.051[c] (1.007[d])
20Cb-3	1.007[e] (1.008[f])	1.008[e] (1.015[f])	1.008[e] (1.015 [f])	1.010[e] (1.011[f])	1.018[c] (1.009[d])
Nitronic 33	(1.002[g])	1.022[e] (1.006[f])	1.030[e] (1.012 [f])	1.030[e] (1.023[f])	1.126[c] (1.033[d])
Nitronic 40	1.004[e] (1.003[h])	1.003[e] (1.004 [h])	1.005[e] (1.004 [h])	1.019[e] (1.052[h])	1.081[c] (1.048[h])
Initial Calibration, 1.27±0.01	1.272	1.276	1.275	1.277	1.276
Note on thickness [a]: 1.99 mm, [b]: 6.65 mm, [c]: 0.5 mm, [d]: 6.0 mm, [e]: 1.59 mm, [f]: 6.35 mm, [g]: 7.94 mm, [h]: 4.76 mm					

1. Anneal conditions
   - Vacuum pressure at 1.0 x 10^{-4} Torr, 1,750 º F for 30 minute soaking on 20Cb-3 and 1,950 º F for 30 minute soaking on the other types, Rapid Nitrogen gas quenching
2. 316LN had stable permeability values of less than 1.010, even if cold-works and welding.
3. 310S and Nitronic 40 had increased in permeability after welding significantly.
4. 20Cb-3 had acceptable permeability values less than 1.020 (most less than 1.010) and good welding characteristics (less heat-affected zone)
5. Nitronic 33 and 20Cb-3 had increased in permeability after annealing.

Production Chamber Permeability

(full length Prototype A)

As-received
Alloy 20
1.009 ~ 1.010
(0.75" thick)

Distance from Center (inch)	2/16/2007 Measured in use of OLD Perm. Meter			TRUE		
	Strongback (16mm)	Strongback (6mm)	Endcap	**Strongback (16mm)**	**Strongback (6mm)**	**Endcap**
60	1.011	1.009	1.005	**1.011**	**1.010**	**1.006**
50	1.011	1.009	1.005	**1.011**	**1.010**	**1.006**
40	1.011	1.010	1.006	**1.011**	**1.011**	**1.007**
30	1.012	1.009	1.005	**1.012**	**1.010**	**1.006**
20	1.011	1.009	1.005	**1.011**	**1.010**	**1.006**
10	1.011	1.008	1.005	**1.011**	**1.009**	**1.006**
0	1.011	1.009	1.006	**1.011**	**1.010**	**1.007**
-10	1.011	1.010	1.007	**1.011**	**1.011**	**1.008**
-20	1.011	1.009	1.004	**1.011**	**1.010**	**1.004**
-30	1.011	1.009	1.006	**1.011**	**1.010**	**1.007**
-40	1.012	1.009	1.006	**1.012**	**1.010**	**1.007**
-50	1.011	1.009	1.006	**1.011**	**1.010**	**1.007**
-60	1.011	1.009	1.006	**1.011**	**1.010**	**1.007**
			Average	**1.011**	**1.010**	**1.006**

Thickness	Sensitivity
16 mm	1
6 mm	0.9

Distance from Center (inch)	2/16/2007 Measured in use of NEW Perm. Meter			TRUE		
	Strongback (16mm)	Strongback (6mm)	Endcap	**Strongback (16mm)**	**Strongback (6mm)**	**Endcap**
60	1.012	1.010	1.007	**1.012**	**1.013**	**1.009**
50	1.012	1.010	1.006	**1.012**	**1.013**	**1.008**
40	1.013	1.011	1.007	**1.013**	**1.014**	**1.009**
30	1.012	1.010	1.007	**1.012**	**1.013**	**1.009**
20	1.013	1.011	1.007	**1.013**	**1.014**	**1.009**
10	1.013	1.011	1.007	**1.013**	**1.014**	**1.009**
0	1.013	1.010	1.007	**1.013**	**1.013**	**1.009**
-10	1.013	1.012	1.008	**1.013**	**1.015**	**1.010**
-20	1.012	1.010	1.006	**1.012**	**1.013**	**1.008**
-30	1.012	1.010	1.006	**1.012**	**1.013**	**1.008**
-40	1.012	1.010	1.006	**1.012**	**1.013**	**1.008**
-50	1.012	1.010	1.006	**1.012**	**1.013**	**1.008**
-60	1.012	1.010	1.006	**1.012**	**1.013**	**1.008**
			Average	**1.013**	**1.013**	**1.008**

Thickness	Sensitivity
16 mm	0.98
6 mm	0.80

After fabrication, permeability ≤ 1.013

m_True = (m_Measured-1+Sensitivity)/Sensitivity

FE Analysis - Criteria

- "Design rules of vacuum chambers" by C. Hauviller / CERN (refer to http://cas.web.cern.ch/cas/Spain-2006/PDFs/Hauviller.pdf)
  - "No construction code dedicated for vacuum vessels but one for cryogenic vessels"
  - "the permissible membrane stress for predominantly static loads …must not…exceed…2/3 of the yield limit (stainless steel and aluminum alloys)"
  - Welding -"Design and execute according to the rules of the construction code" "reduction factor: 0.85, 0.7"
- Material Strength (SS316LN & Alloy 20)
  - Yield Strength
    - SS316LN (SA-240) = 30ksi (205MPa)
    - Alloy 20, N08020 (SA-240) = 35ksi (240MPa)
  - From Material Certificate (Yield / Tensile strength)
    - SS316LN = 393.0 MPa / 702 MPa
    - Alloy 20, N08020 = 43.1ksi / 91.0ksi
- To Meet ASME Pressure Vessel Code (Section VIII-Division 1 Section II – Part D, Table 1A)
  - Maximum allowable stress of 316LN = 20ksi (138MPa)
  - Safety factor of 2.0:
    - Maximum von-Mises stress < 69.0 MPa
- Maximum Displacement < 200.0 μm

FE Analysis I - Beam aperture

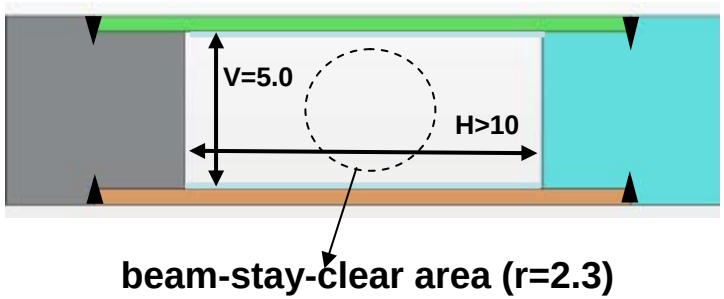

- **PRD**
  - The beam-stay-clear radius around the CA is 2.3 mm
  - 5.0 mm full height
  - 10.0 mm full width

Aperture	Maximum Displacement (μm)	Maximum Stress (MPa)	Remarks
10 mm (H) x 5 mm (V)	0.52	8.15	Acceptable
15 mm (H) x 5 mm (V)	5.86	41.7	Acceptable
20 mm (H) x 5 mm (V)	19.2	106.4	Out of Criteria

H → 12.5 mm (the inner full width in PRD: 10.0 mm)
V → 5.0 mm (6.0 mm), Thickness → 0.5 mm

FE Analysis II – Chamber strongback

- **Loads**
  - **Vacuum pressure (1atm) = - 0.1014 MPa**
  - **Flange Weight = - 2.0 N**
  - **Gravity = -9,810 mm/sec^2**
- **Boundary conditions**
  - **All bottom surfaces for 14 screws are fixed**

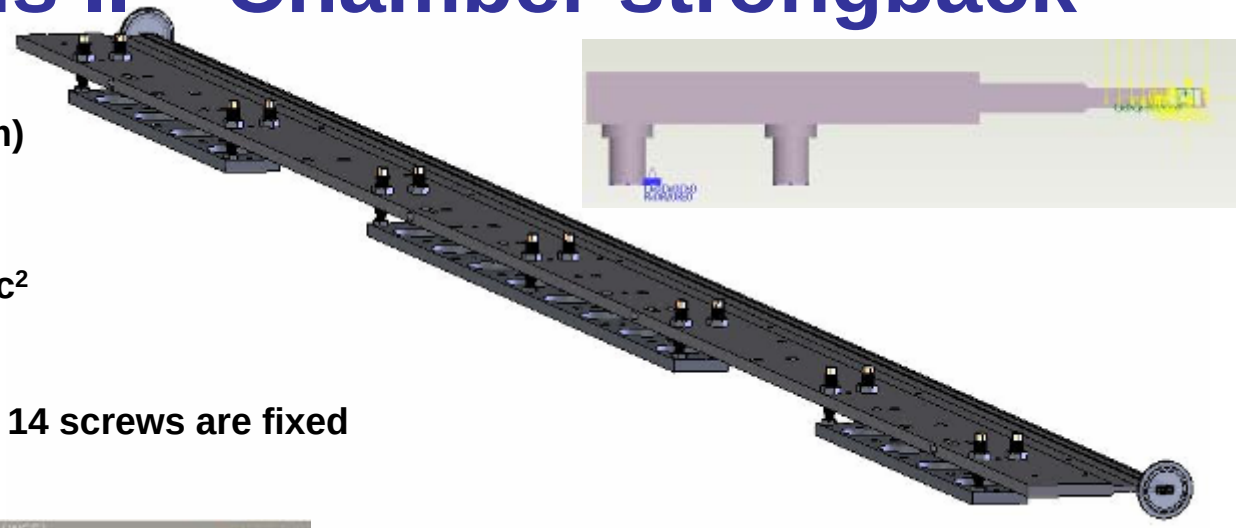

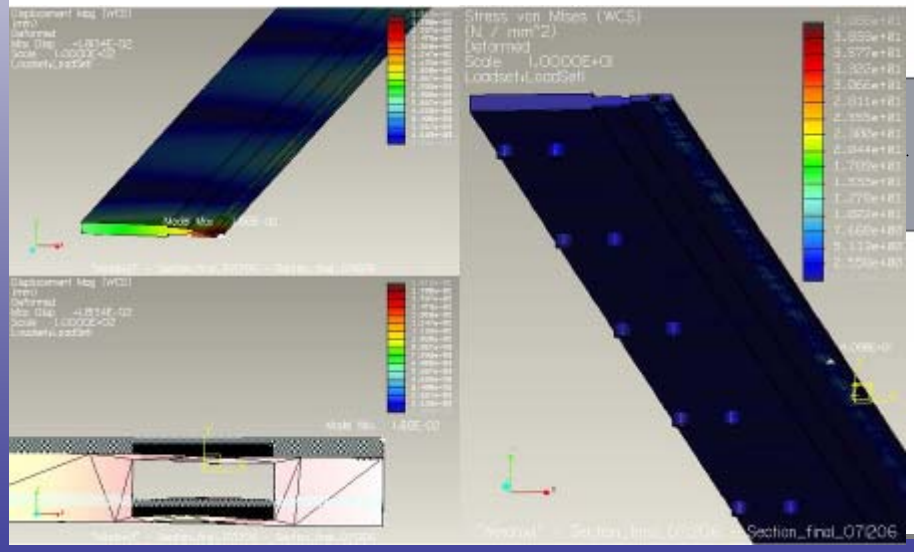

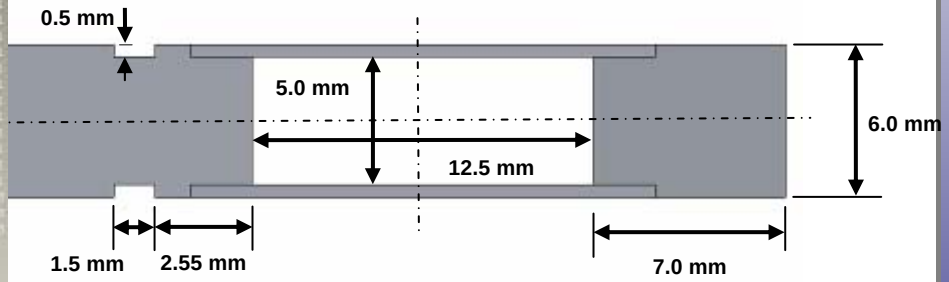

- Maximum Displacement = 18.0 μm
- Maximum Von-Mises Stress = 48.0MPa

Breakdown of the spacing

between the undulator and the vacuum chamber

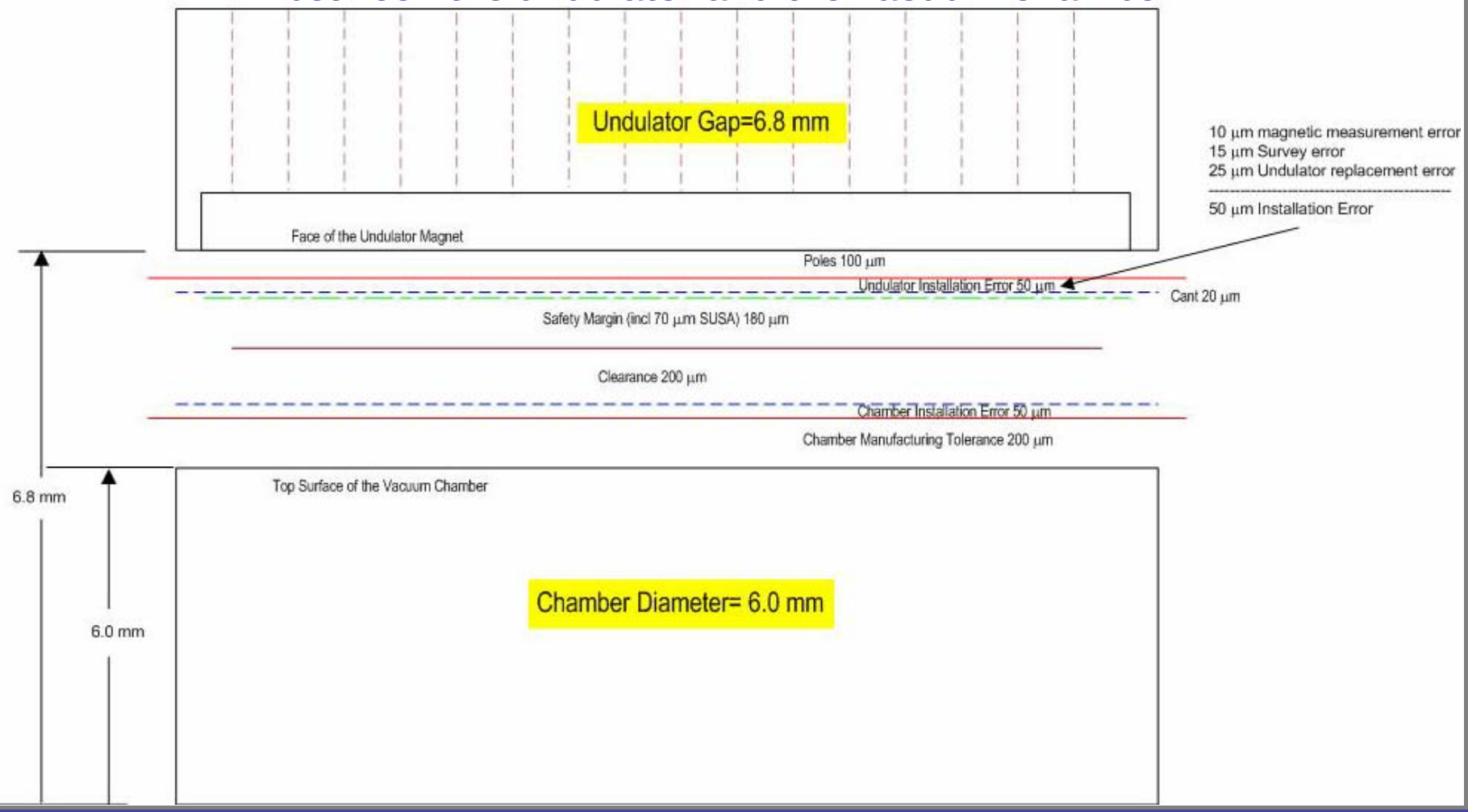

Vacuum Chamber Adjustment Mechanism

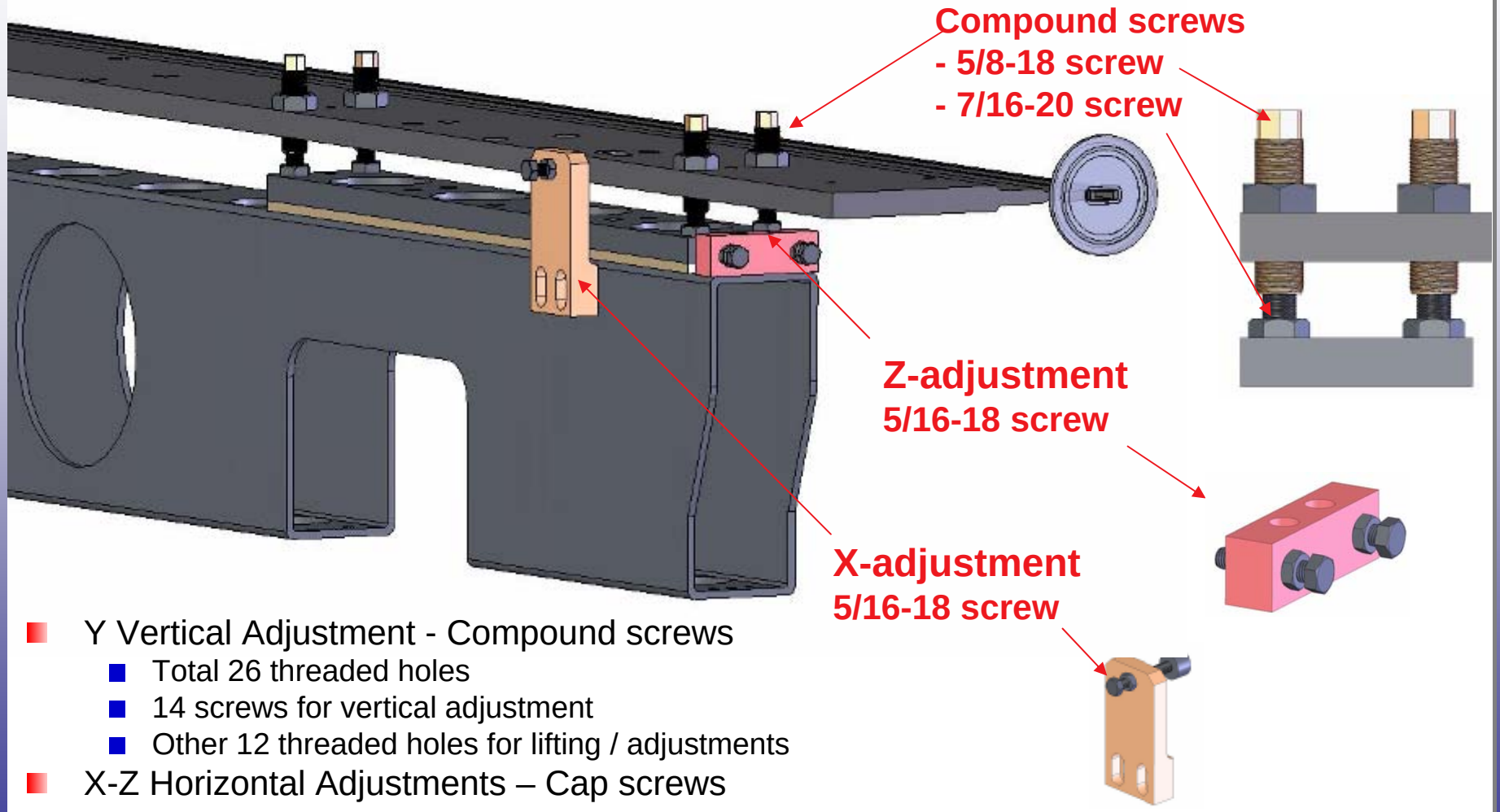

- Y Vertical Adjustment - Compound screws
  - Total 26 threaded holes
  - 14 screws for vertical adjustment
  - Other 12 threaded holes for lifting / adjustments
- X-Z Horizontal Adjustments – Cap screws

Chamber Alignment/Survey Results

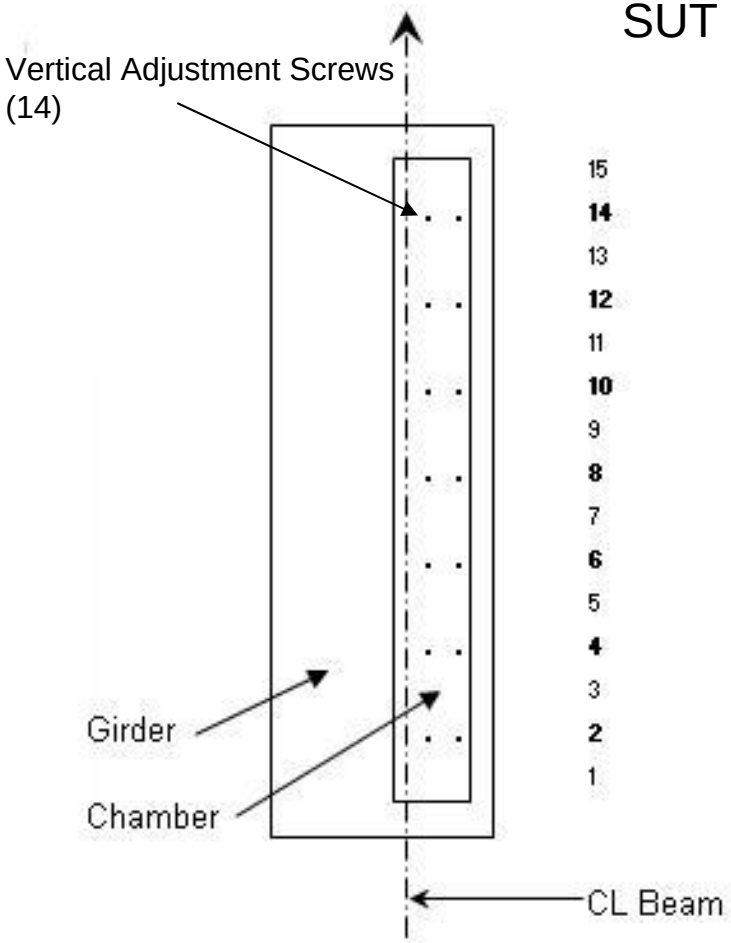

	SUT Mockup Chamber		Prototype B Chamber	
	1. Iteration	2. Iteration	iteration 1	iteration 2
15	-40	20	70	50
14	**0**	**50**	**20**	**-30**
13	-110	-80	-98	-48
12	**10**	**-20**	**2**	**52**
11	60	50	-172	-122
10	**10**	**-40**	**12**	**22**
9	50	30	102	82
8	**0**	**10**	**-8**	**2**
7	-20	0	-139	-109
6	**0**	**50**	**-39**	**41**
5	-130	-40	-3	37
4	**-10**	**20**	**84**	**94**
3	-40	-10	-116	-96
2	**0**	**-10**	**2**	**22**
1	50	20	142	62

Results showed the vertical centerline of vacuum chamber can be within tolerance of ± 200 µm

Chamber & Compound Adjustment Assembly

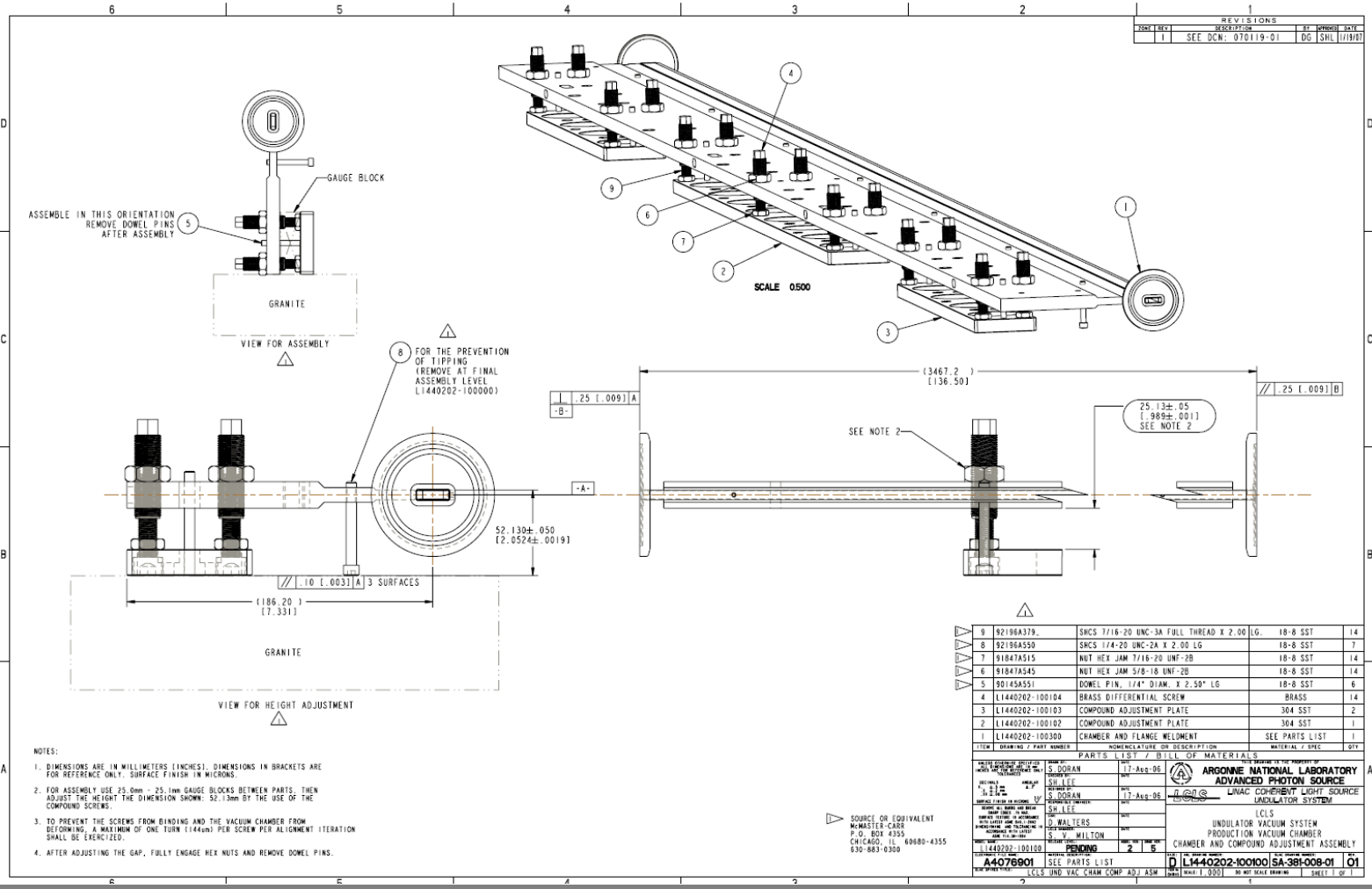

Production Tubing Support Assembly

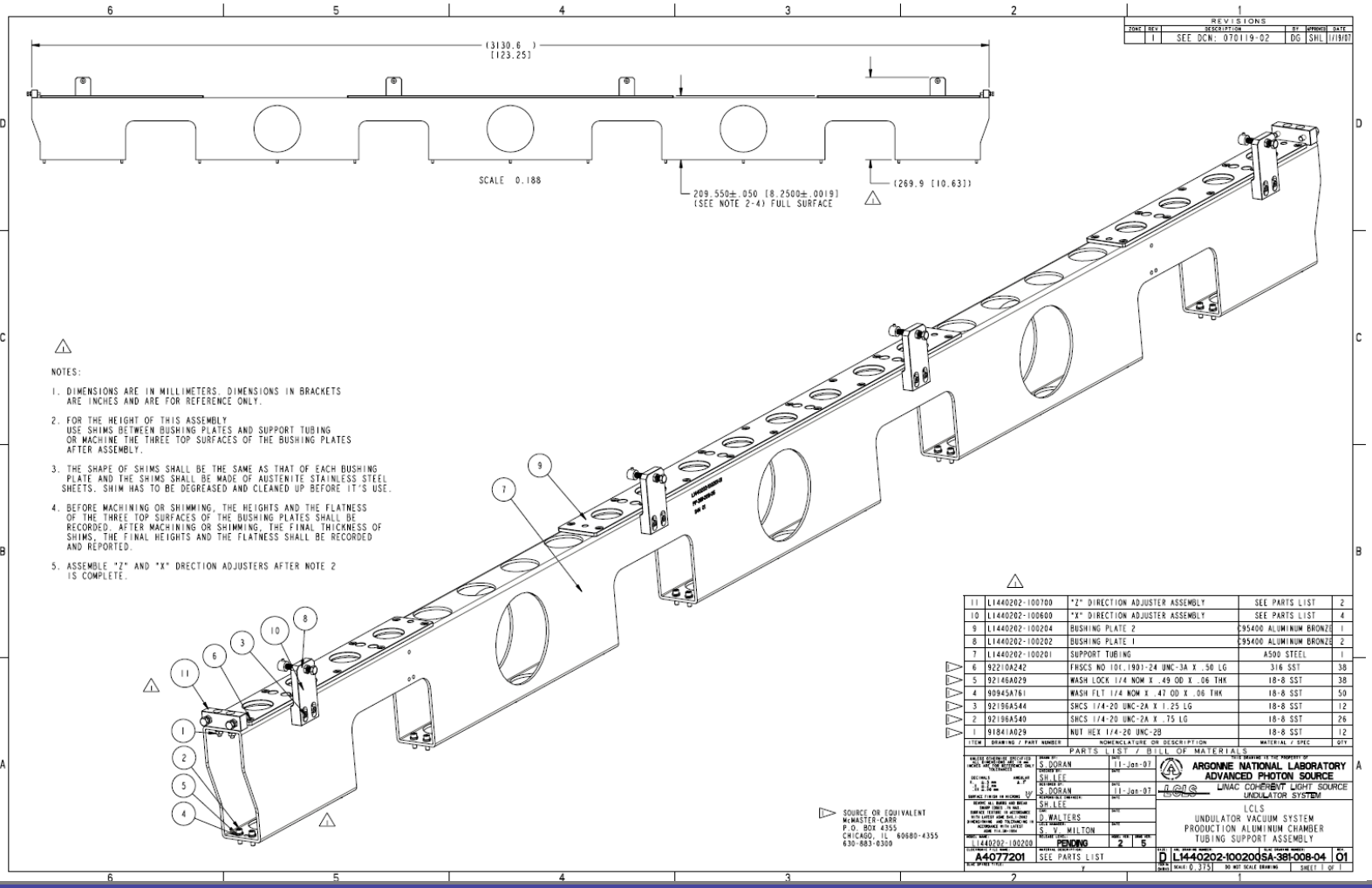

Production Vacuum Chamber Assembly

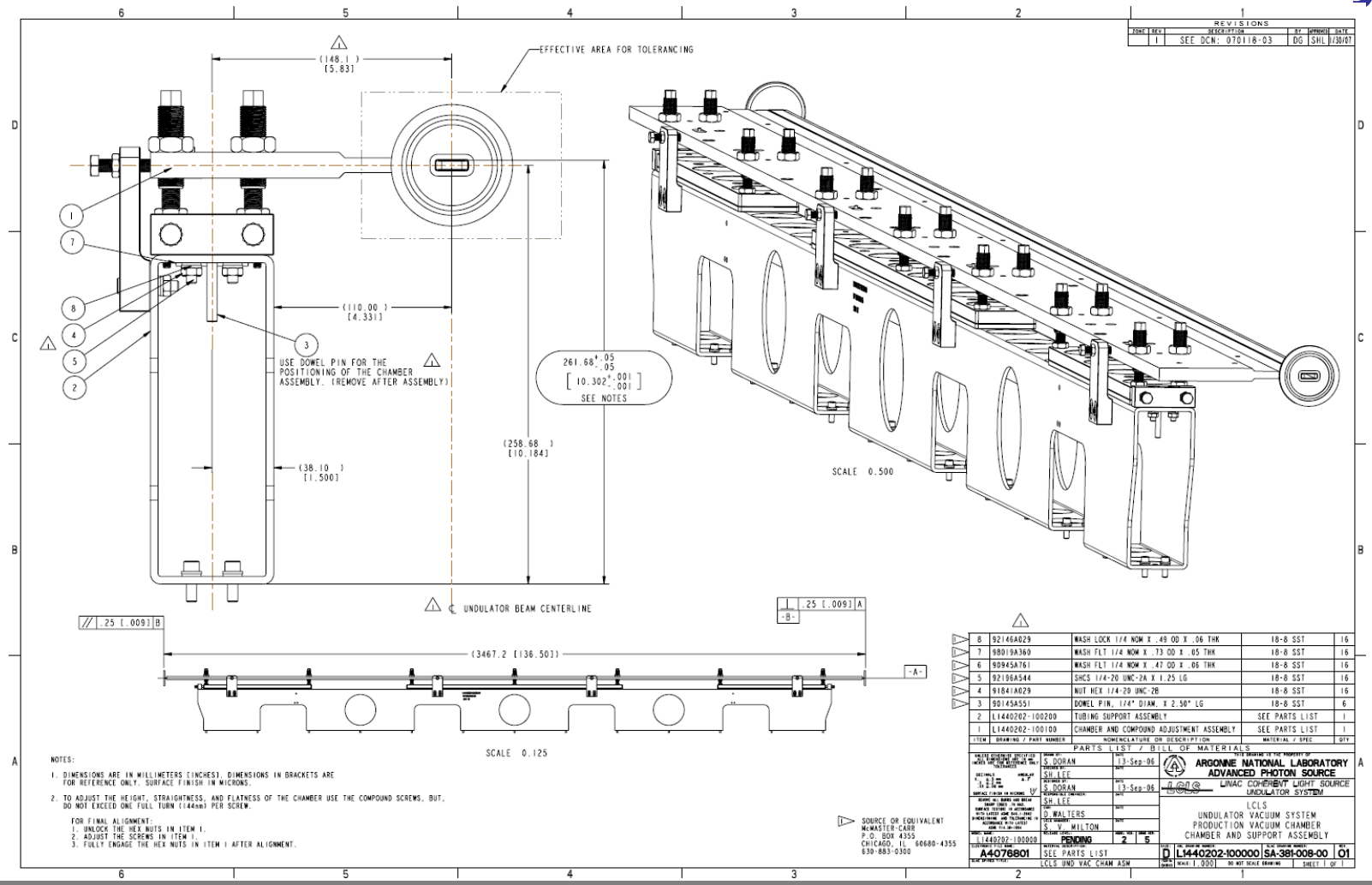

Construction Development

- Fabrication Process
  - Strongback Machining
  - Polishing
  - Welding
  - Final Machining
  - Coating

Fabrication Processes

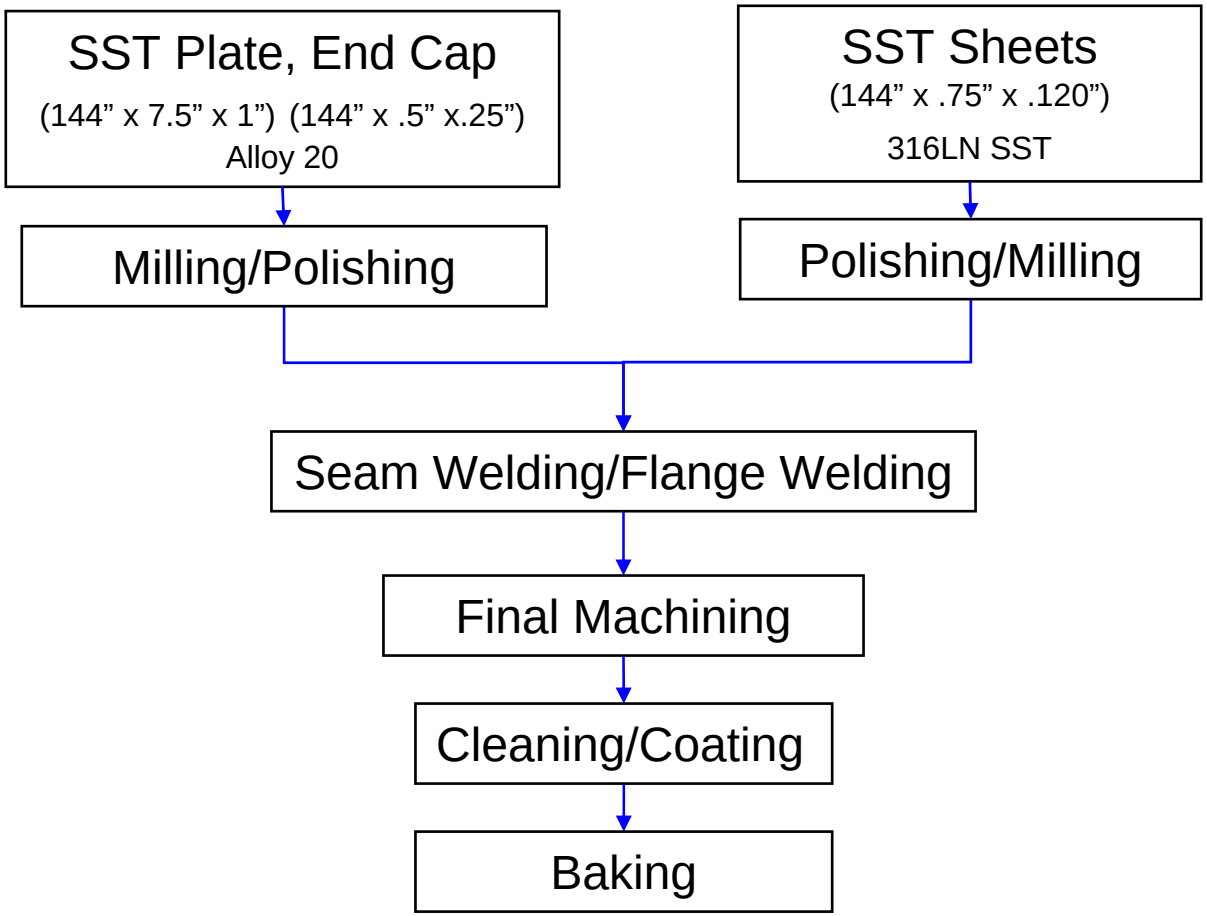

SUT Machining Results

- Material: Austenite stainless steel 316
- Supplier: Walco Tool & Engineering
- Parallelism of chamber surfaces (0.100 mm): 0.250 mm
- Thickness of chamber (6.00 ~ 6.08 mm) : max. 6.15 mm
- Straightness of chamber edge (± 0.200 mm) : max. 0.406mm bowed
- Vibratory stress relief is required, which may restore the original properties of the base metal

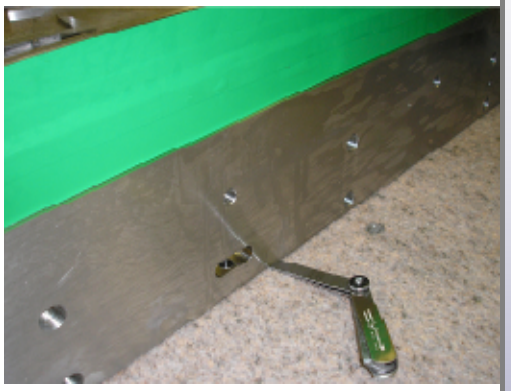

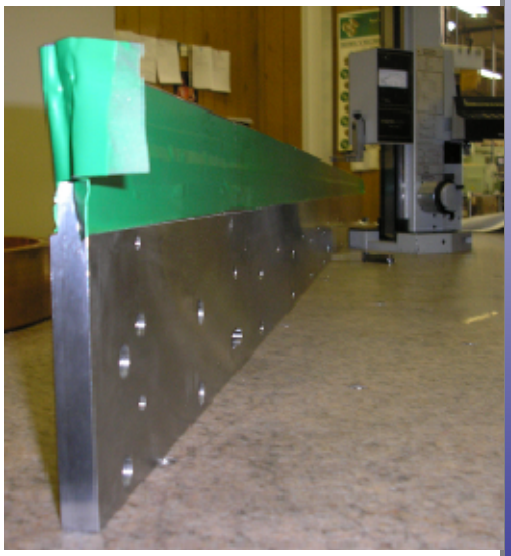

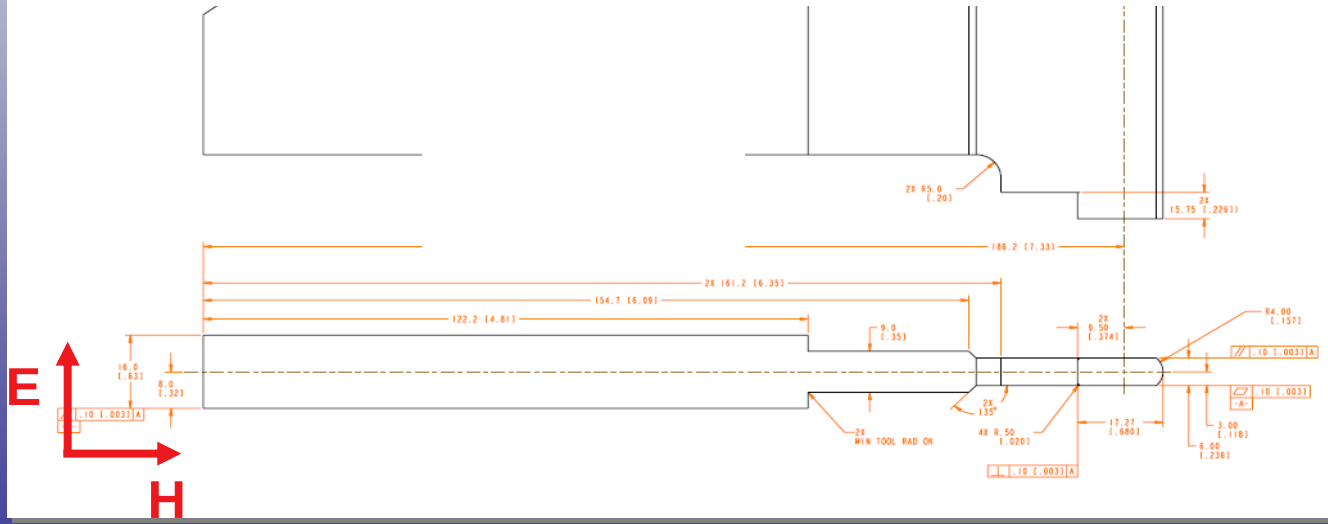

Vibration Stress Relief

- The Vibratory Stress Relief Treatment procedure was established for the machining of Alloy 20 plate (135“ x 7“ x 0.63" thick)
  - Prior to machining
  - After rough machining
- Setup A: Three-point clamp arrangement
- Setup B: Four-point clamp arrangement

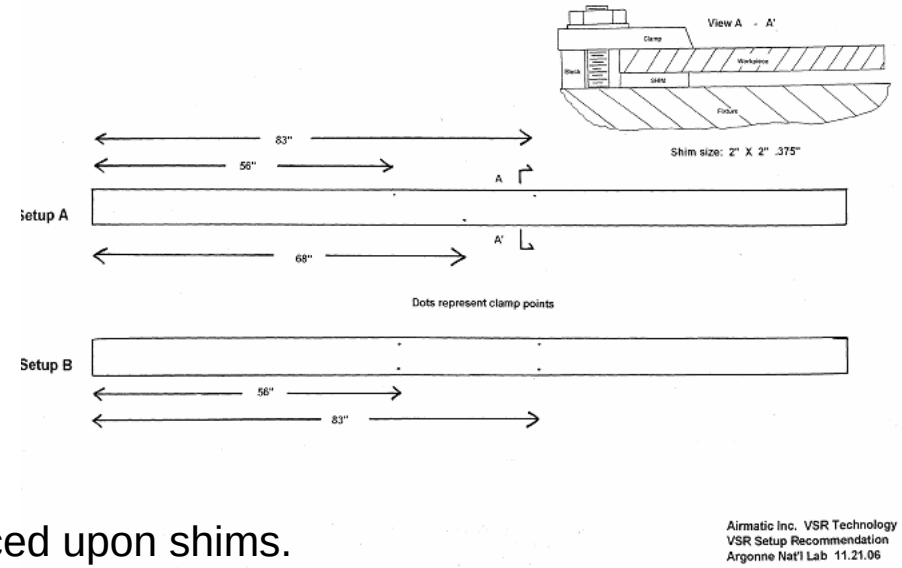

- For both setups, the work-piece will be placed upon shims.
  - Prior to machining, shims will be 3.75” H.
  - After rough machining, the one or two (depending upon 3 or 4 point setup used) shims that will be placed beneath that portion of the work-piece to adjust the flat height.
- VSR treatment will be based on the VSR Treatment Charts generated by the VSR System to satisfy the following criteria:
  - Greater population of resonance peaks
  - Larger resonance peaks
  - Greater growth and/or shifting of resonance peaks during VSR Treatment

Strongback Machining Steps

1. Vibration stress relief of the material in the as-received condition
2. Straightening
3. Rough mill to .025"
4. Vibration stress relief
5. Drill holes
6. Straightening
7. Finish mill Sides (on fixture)
8. Grind Surface -A- and Nose (on fixture)
9. Mill Surface -B- and Weld relief features (on fixture)
10. Inspect for "constrained state" features (on fixture)
11. Straightening, if necessary
12. Inspect for “un-constrained (free) state” features

Prototype B Strongback Machining

- Material: Austenite stainless steel 316
- Supplier: Dial Machine Inc. (measured in Aug. 8, 06)
- No attempt was made to adjust the constrained condition to improve the results.
- Flatness of nose bottom surface in the clamped condition (0.100mm): 0.314mm
- Parallelism of nose bottom surface to strongback bottom in the clamped condition (0.100mm): 0.198 mm
- Parallelism of nose top surface to nose bottom surface in the clamped condition (0.100mm): 0.107 mm
- Straightness of chamber edge (180.0± 0.20mm) : 179.54~179.70mm (0.160mm bowed)
- Thickness of chamber every 12” in the clamped condition (5.0±.08mm): 4.945~5.112mm
- Flatness of the surface of machining fixture in the strongback clamped condition: 0.04mm
- Flatness of the bottom surface of strongback in the free state: 1.143mm

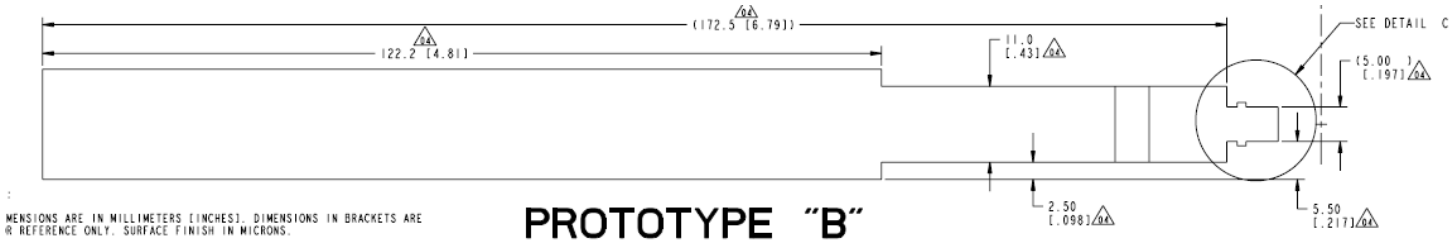

Prototype A Strongback Machining

- Material: Alloy 20
- Supplier: Dial Machine Inc. (measured in Nov. 20, 06)
- Tended to tweak the process to keep the part in an acceptable tolerance band
- Flatness of nose bottom surface in the clamped condition (0.100mm): 0.034mm
- Parallelism of nose bottom surface to strongback bottom in the clamped condition (0.100mm): 0.035 mm
- Parallelism of nose top surface to nose bottom surface in the clamped condition (0.100mm): 0.035 mm
- Straightness of chamber edge (180.0± 0.20mm) : 179.94~180.62mm
- Thickness of chamber every 12” in the clamped condition (5.0±.08mm): 5.038~5.073mm
- Flatness of the surface of machining fixture in the strongback clamped condition: 0.025mm
- Flatness of the bottom surface of strongback in the free state: 1.6 mm

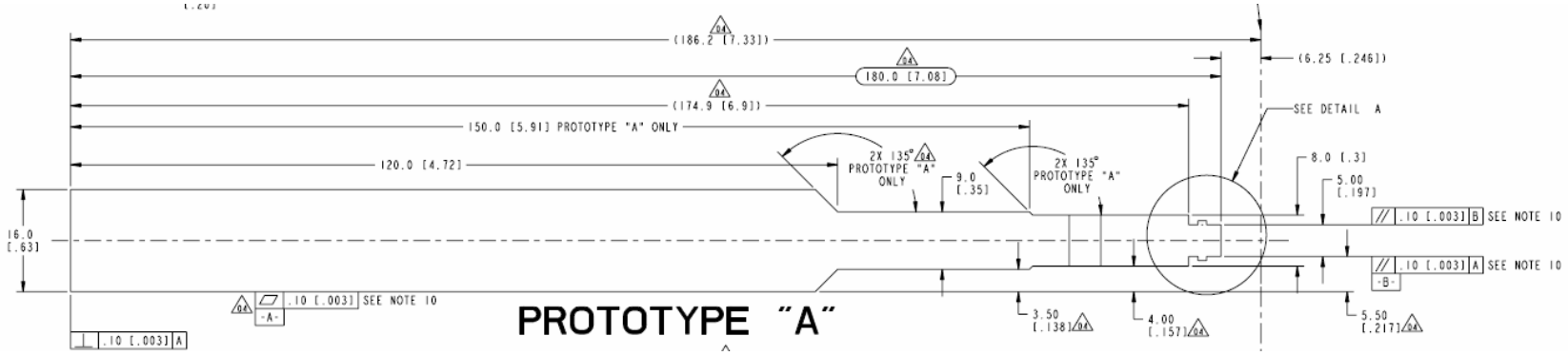

Strongback Machining Drawing

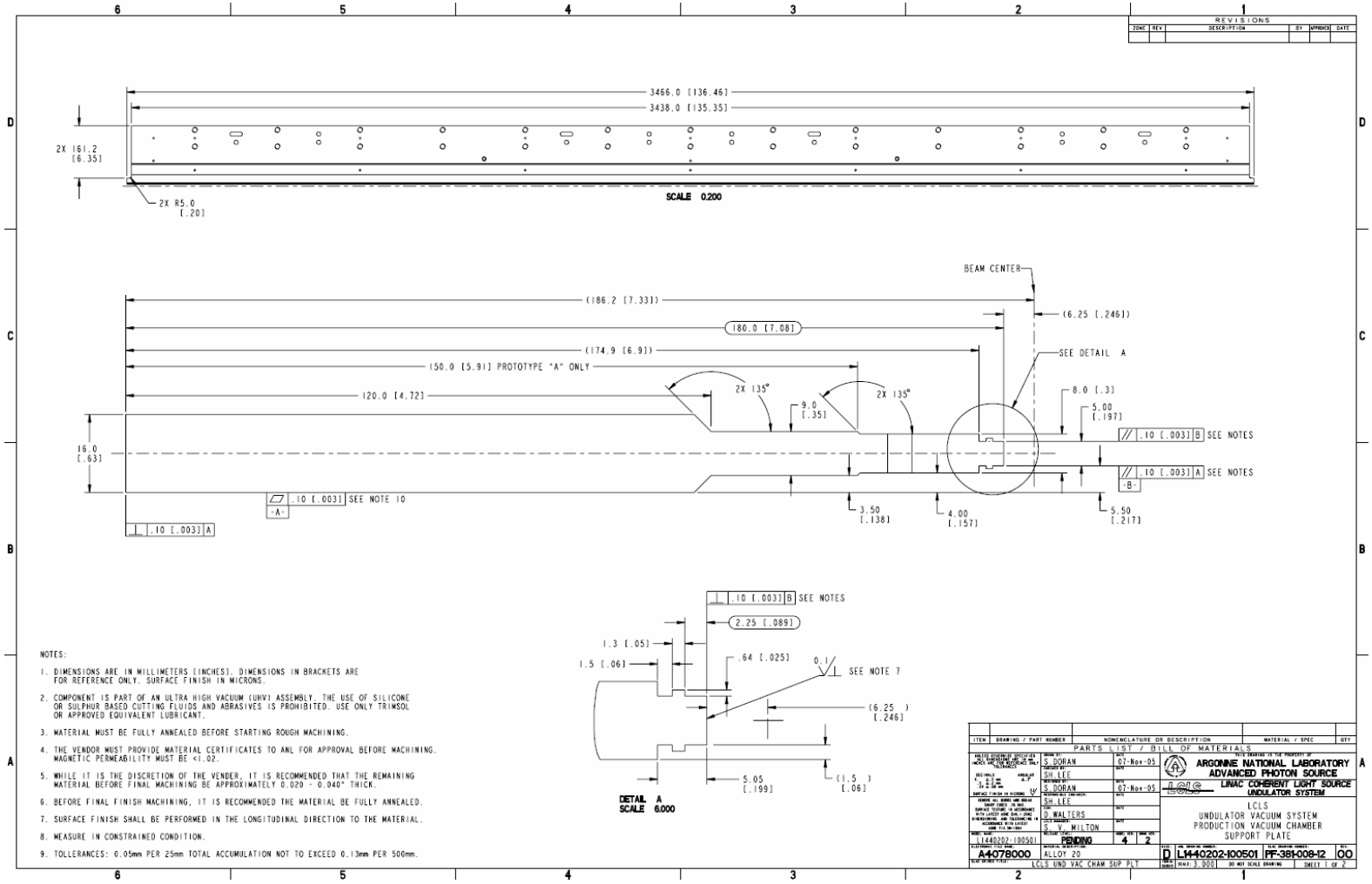

Side Wall Polishing

- To reduce the surface roughness wakefield effects and geometric wakefield effects
- Roughness Tolerance Specification in PRD 1.4-001
  - *For each spatial frequency component of the surface roughness, the ratio of the corresponding spatial wavelength to the amplitude will greater or equal to 300 over the 0.01-10 mm range. Structures shorter than 10 µm will be kept smaller than 25 nm.*
- ESD: 4 µin Ra (100nm Ra) or better for the inner wall surfaces

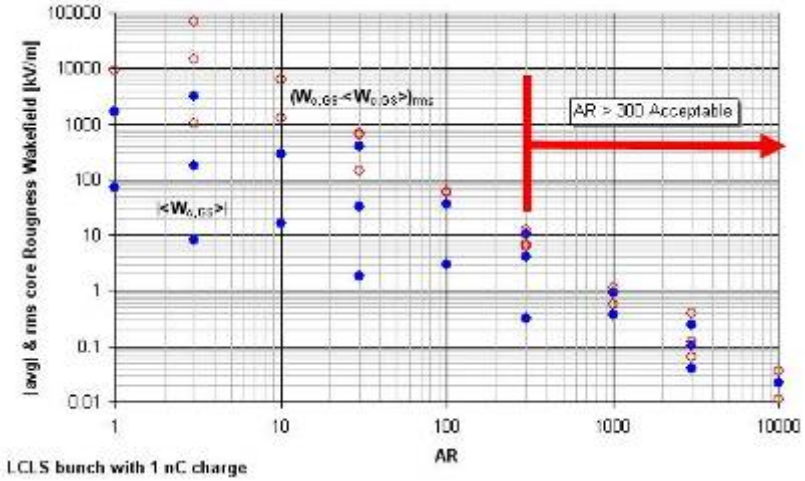

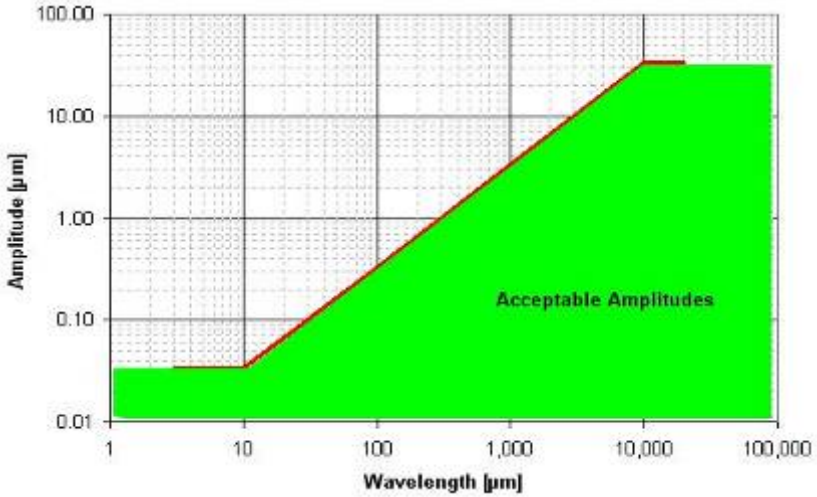

Evaluation of Roughness Scans

(Prototype Sheets)

Off-the-shelf polished sample from Hwa-Yang

r(z): 5100 mm; h_{rms}: 7.5 nm **# 1**

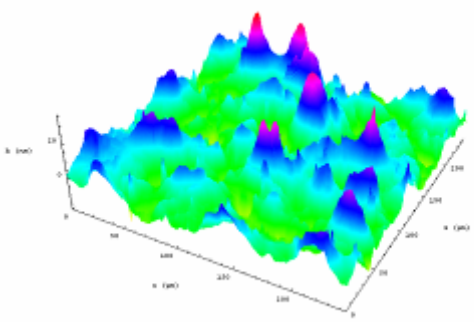

x'_{rms}: 1.0 mrad; z'_{rms}: 1.1 mrad

r(x): -1150 mm; h_{rms}: 8.6 nm **# 4**

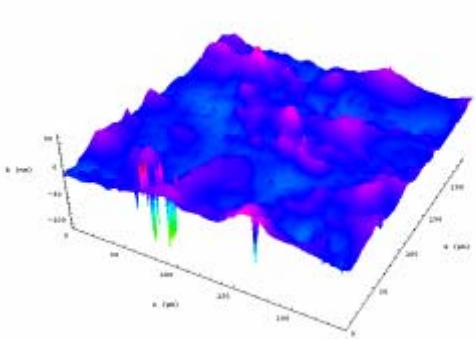

x'_{rms}: 2.1 mrad; z'_{rms}: 2.2 mrad

Objective: 50x

Size: 0.244 x 0.244 mm²

rms derivatives < 10 mrad

Well within tolerance.

Polished sample from PML

WLI

r(z): -1867 mm; h_{rms}: 27.9 nm **# 8**

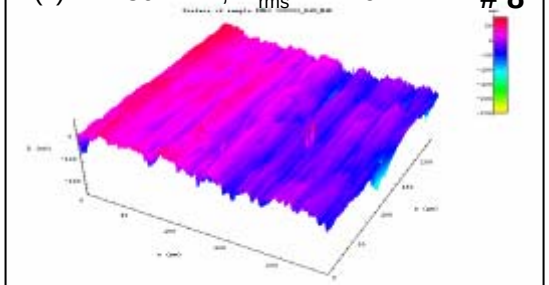

x'_{rms}: 14.4 mrad; z'_{rms}: 3.6 mrad

Sampled Data (1024x1024)

AFM

r(z): -907 mm; h_{rms}: 13.5 nm

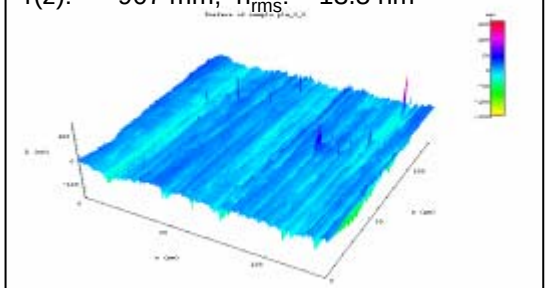

x'_{rms}: 24.4 mrad; z'_{rms}: 8.2 mrad

Sampled Data (500x500)

Evaluation of Roughness Scans

Production Sheets - 316LN

Sample: #6 Mode: PM Objective: 20x Size: 0.610 x 0.610 mm^2

r(x): -5534 mm; h_{rms}: 10 nm **# 1**

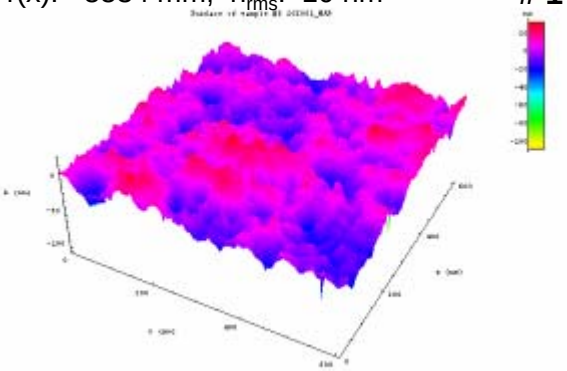

x'_{rms}: 0.9 mrad; z'_{rms}: 1.0 mrad

r(x): -3713 mm; h_{rms}: 15 nm **# 2**

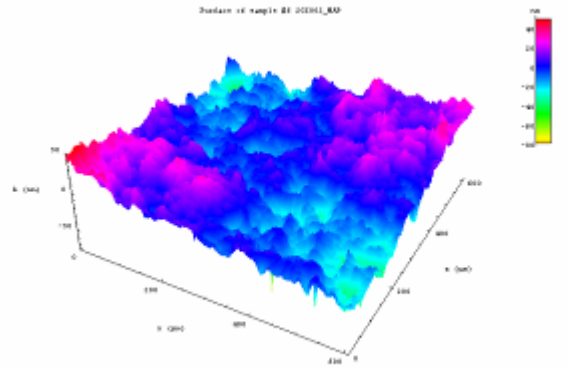

x'_{rms}: 0.9 mrad; z'_{rms}: 1.0 mrad

r(x): -6918 mm; h_{rms}: 17 nm **# 3**

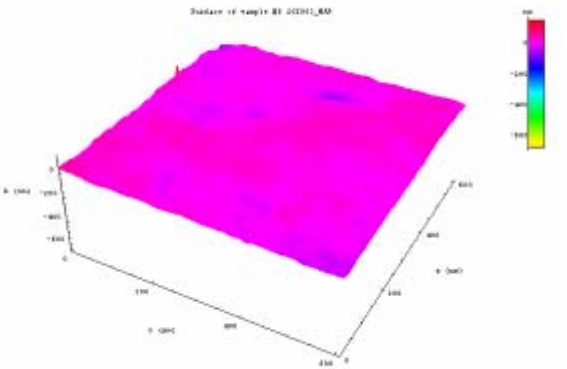

x'_{rms}: 2.2 mrad; z'_{rms}: 2.3 mrad

r(x): -3603 mm; h_{rms}: 13 nm **# 4**

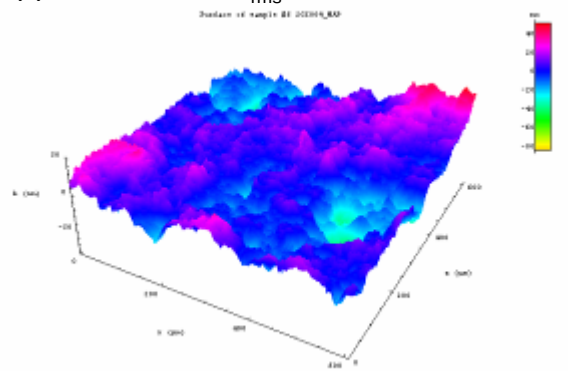

x'_{rms}: 0.8 mrad; z'_{rms}: 1.0 mrad

316LN sheets were polished at Hwa-Yang, China

rms derivatives << 10 mrad

Well within tolerance.

Laser Seam Weld Prototyping

6” First Trial Sample 304 SS

Fixturing for end cap welding

18” Second Trial Samples 304 SS

Welding end cap

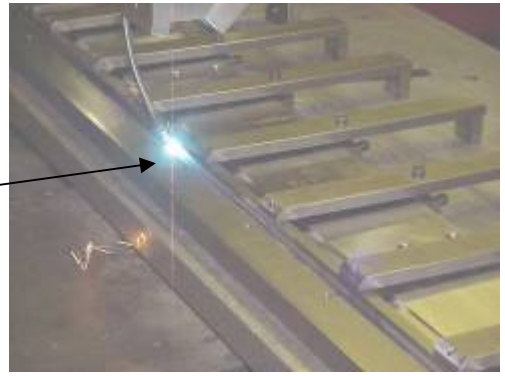

42” Vacuum Chamber Prototype

12' Prototype Laser Seam Welding Fixture

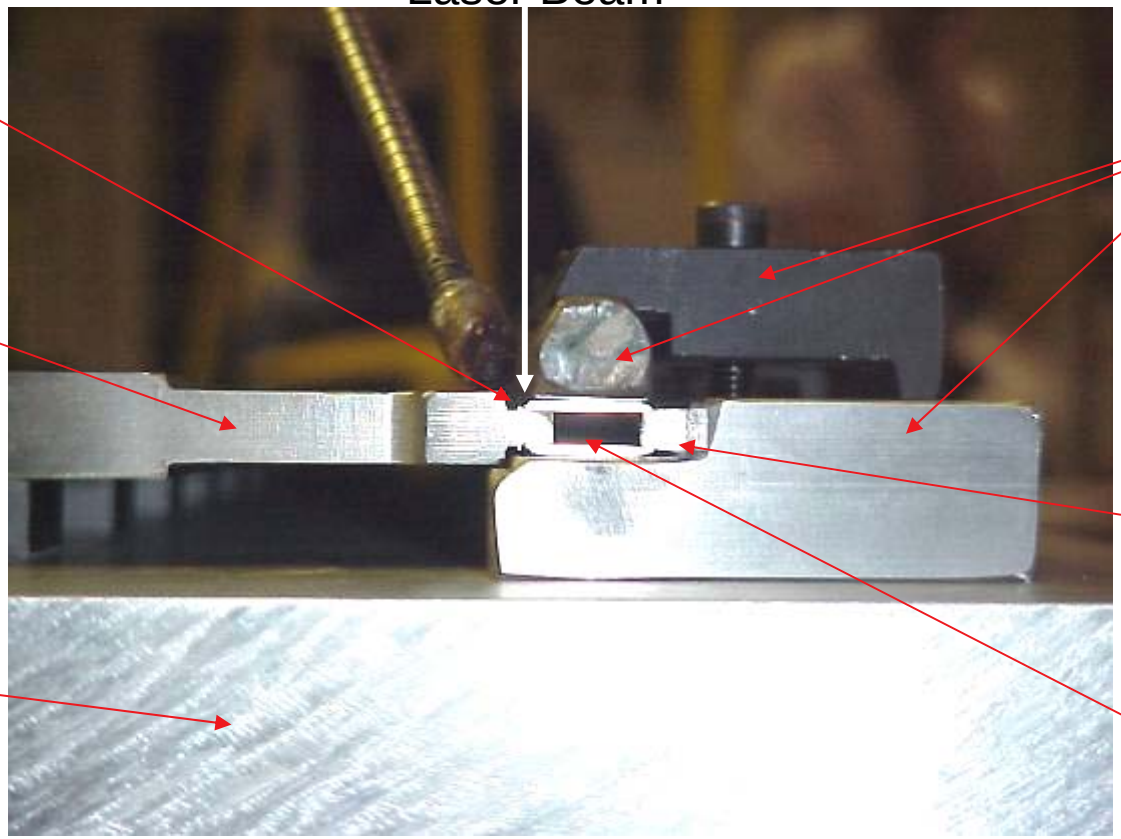

Laser Seam Welding - 12 Foot Prototype

Transferring Fixturing from Strong Back Weld Configuration to End Cap Weld

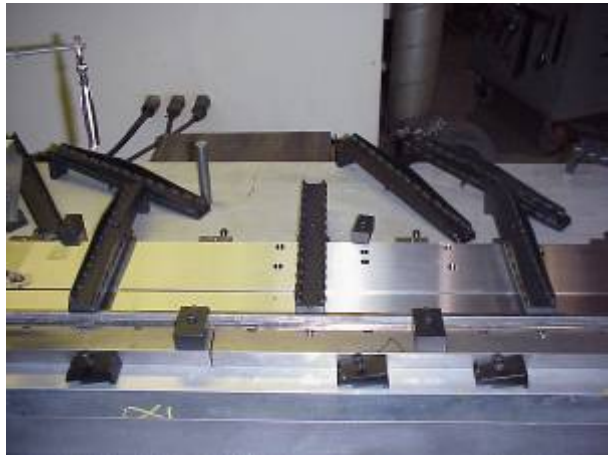

Fixturing for Strong Back Weld

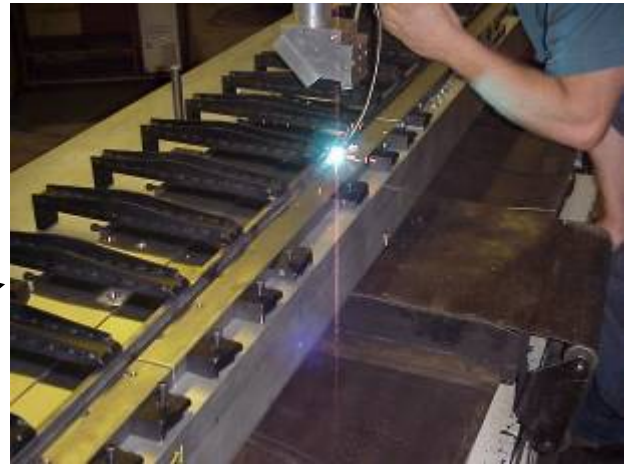

Fixturing for End Cap Weld

Weld Development History for the 12' Prototypes

- Prototype B
  - Welded at vendor-no leak check.
  - Final machined and welded on end flanges at ANL.
  - Leak check revealed 1 leak.
  - Repaired at ANL using silver braze (Severe distortion due to high temp braze).
  - Clean and bake at 200C.
  - Leak check revealed 1 new leak.
  - Repaired at ANL (Use of low temperature Sn-Ag-Cu solder resulted in minimum distortion).

Weld Development History for the 12' Prototypes

- Prototype A
  - Welded at vendor-no leak check.
  - Final machined and welded on end flanges at ANL.
  - Leak check revealed 1 leak.
  - Successful laser weld repair and leak check at vendor.
  - Successful leak check on return to ANL.
  - Leak check after cleaning revealed 1 new leak.
  - Temporarily sealed leak and baked at 150C.
  - Leak check revealed 4 new leaks.
  - Successful laser weld repair and leak check at vendor.
  - Successful leak check on return to ANL.

Lessons Learned from 12' Prototypes

- Provide for leak check at weld vendor. Weld vendor to do both seam and flange welds.
- Proof test durability of welds at weld vendor. Perhaps vibration stress relieve and post heating of weld area. Then final leak check before leaving vendor.
- Most leaks occurred at weld overlaps where the chamber had to be repositioned on the weld table (1/3 and 2/3 along the 12' length). The repair procedure suggested that a second (reduced power) pass over these overlap areas was very effective in assuring a leak tight weld seam.

Summary of Laser Seam Welding Process Development

- 1. 6” Sample Tests 1
  - Established that laser welding provided a satisfactory fusion weld and determined the weld parameters, such as beam power and feed rate.
- 2. 18” Sample Tests 2
  - Determined weld prep configuration that resulted in minimum distortion.
- 3. 42” Prototype
  - Developed fixture design and modified weld prep configuration.
- 4. 12 ft prototypes
  - Developed method for performing leak tight overlapping welds that are required for the full size chambers. Also, established the leak check procedure.

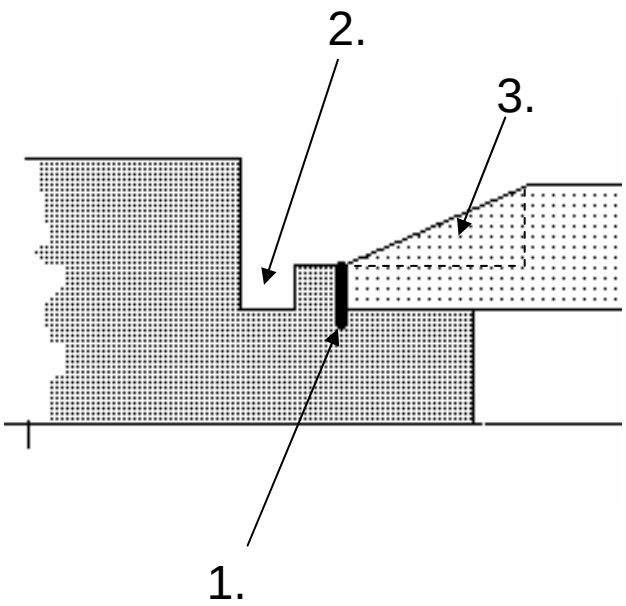

Laser Seam Weld Prototyping

- Conclusions
  - Weld distortions are within tolerances of machined parts.
  - Welds meet UHV requirements.
  - Welds are structurally sound.
  - Laser welding is a practical procedure for seam welding the vacuum chamber.
  - A high quality, full size, vacuum chamber has been fabricated.

TIG Welding of Flanges to Vacuum Chamber

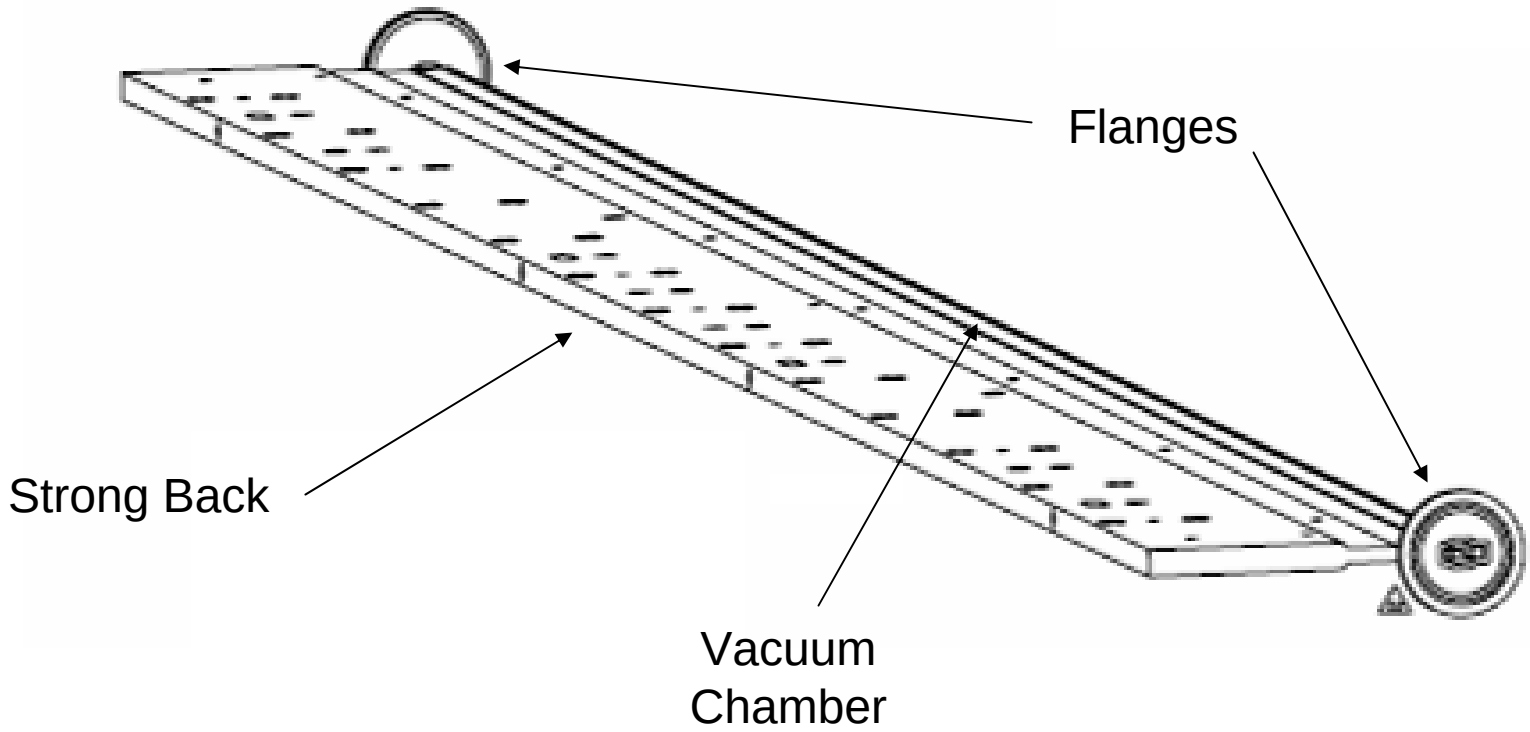

TIG Welding of Flanges to Vacuum Chamber

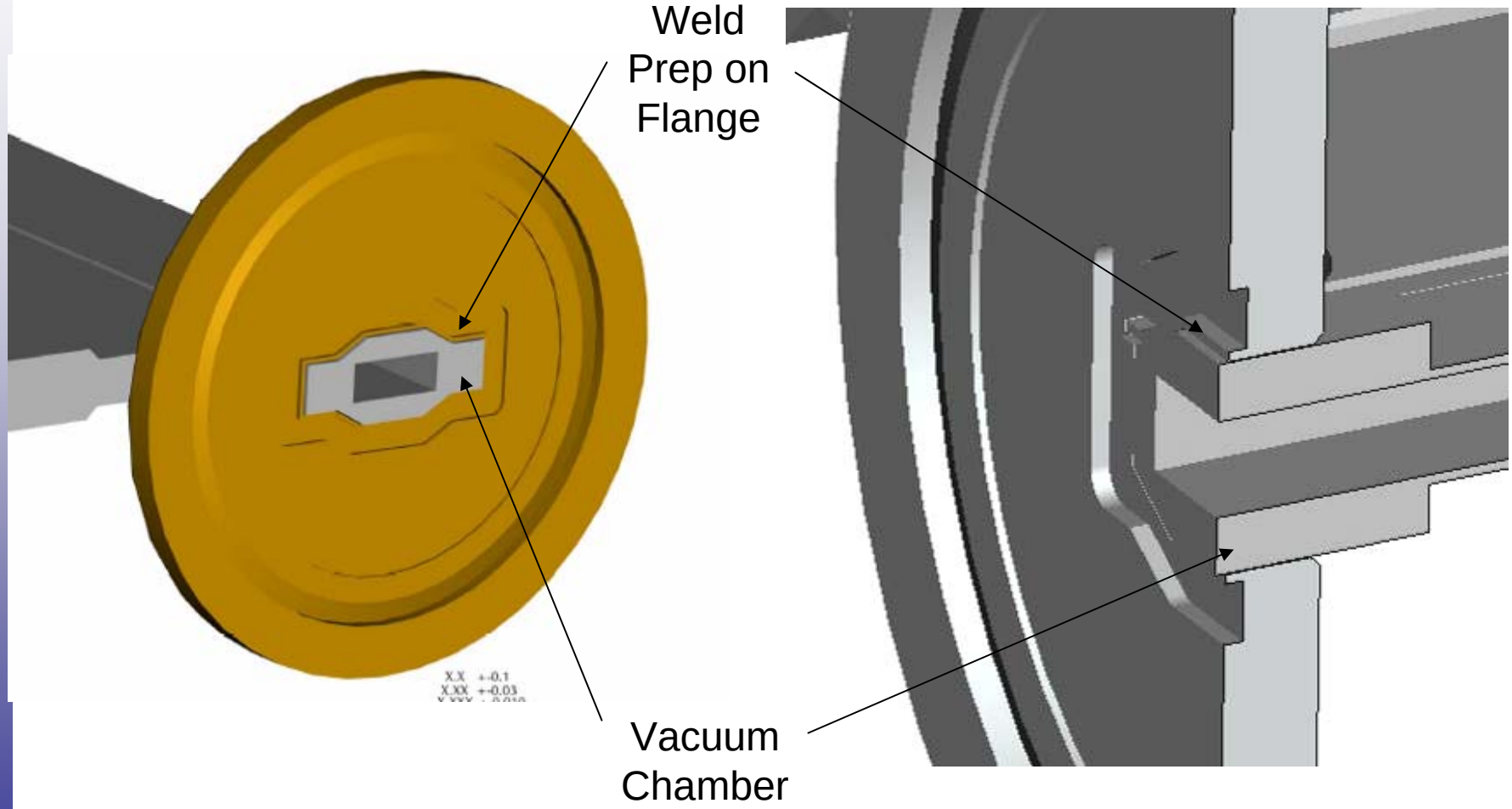

TIG Welding of Flanges to Vacuum Chamber

- Development History
  - Welded flanges on 42” prototype
    - Leaks at intersection of seam weld and flange weld. Modified weld prep eliminated this problem. Needed considerable weld rod filler.
  - Welded flanges on 12’ Prototype B
    - EDM Residue caused significant difficulty in weld process. Eventually obtained leak tight welds. Needed some weld rod filler.
  - Welded flanges on 12’ Prototype A
    - One flange needed no weld rod filler. The other needed minimal filler.
- Conclusion
  - With experience came good, leak tight welds for prototype A.

Final Machining Prototyping

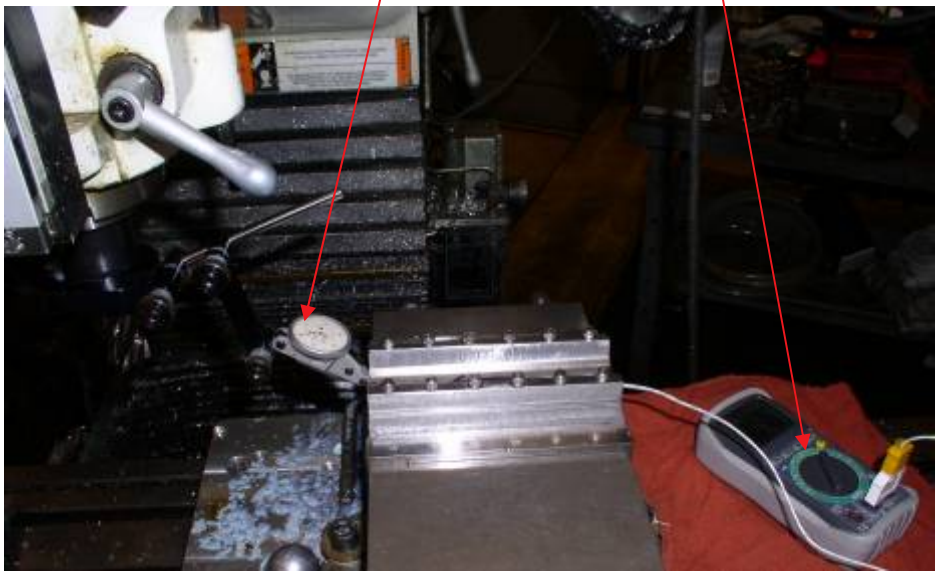

Machining of 6” Long Prototypes

Final Machining Prototyping

- Six Inch and 42” Long Prototype Results
  - Determined
    - Machine Tool Type, material, and Diameter
    - Tool Speed
    - Tool Feed Rate
    - Required Cooling
    - Depth of Single Pass Cuts
    - Acceptable Temperature Rise During Cutting
    - Achievable Tolerances on Flatness & Thickness
    - Fixture design
    - Weld prep modification

Final Machining Method

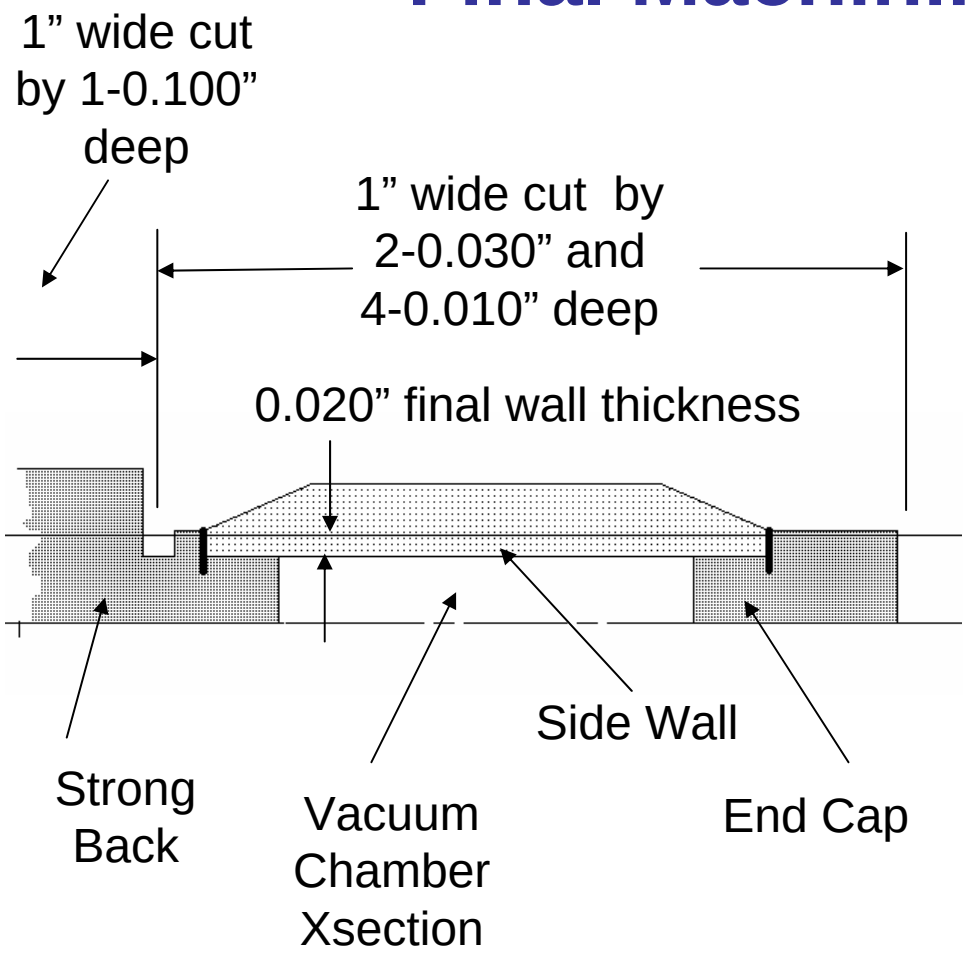

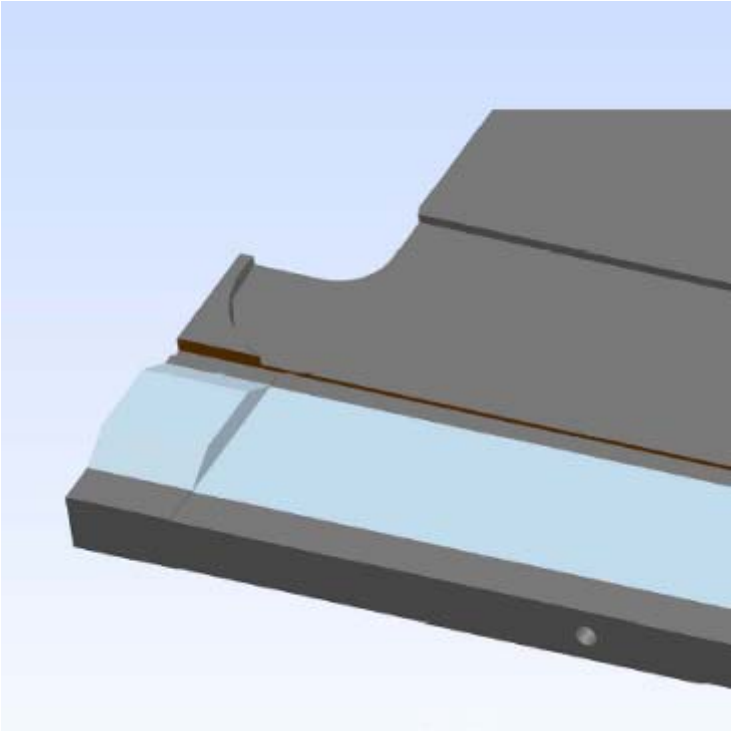

Final Machining Prototyping

- Conclusions
  - Accuracy of final machining is satisfactory
  - Fixturing and repositioning method is practical
  - Machining parameters have been determined

Coating Basics

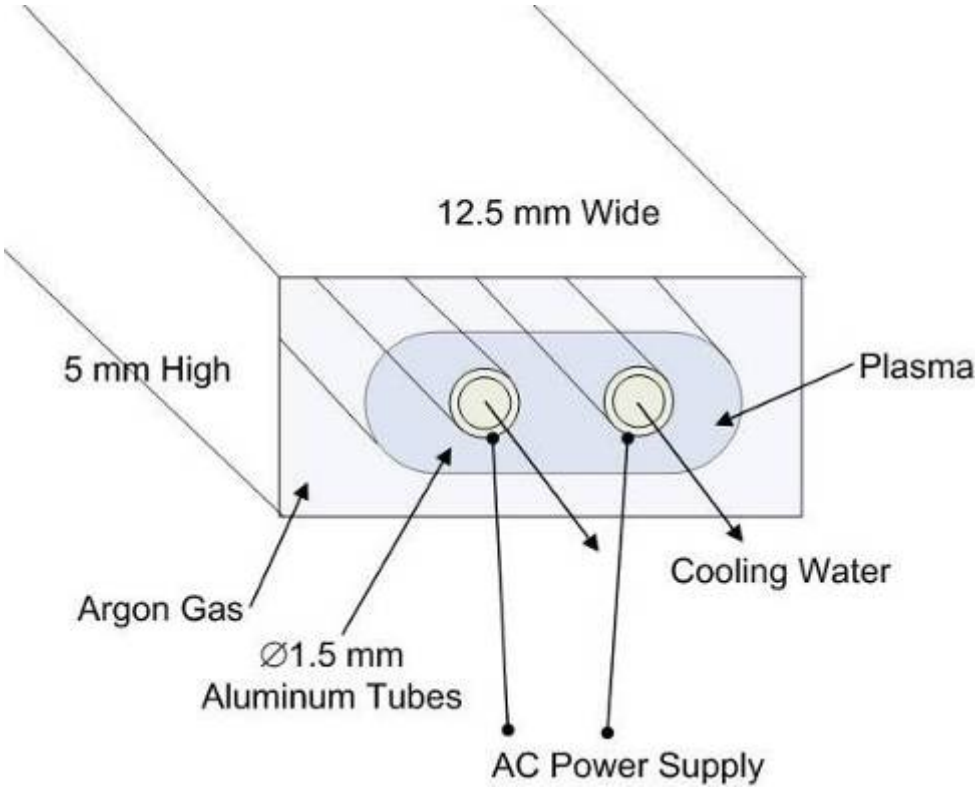

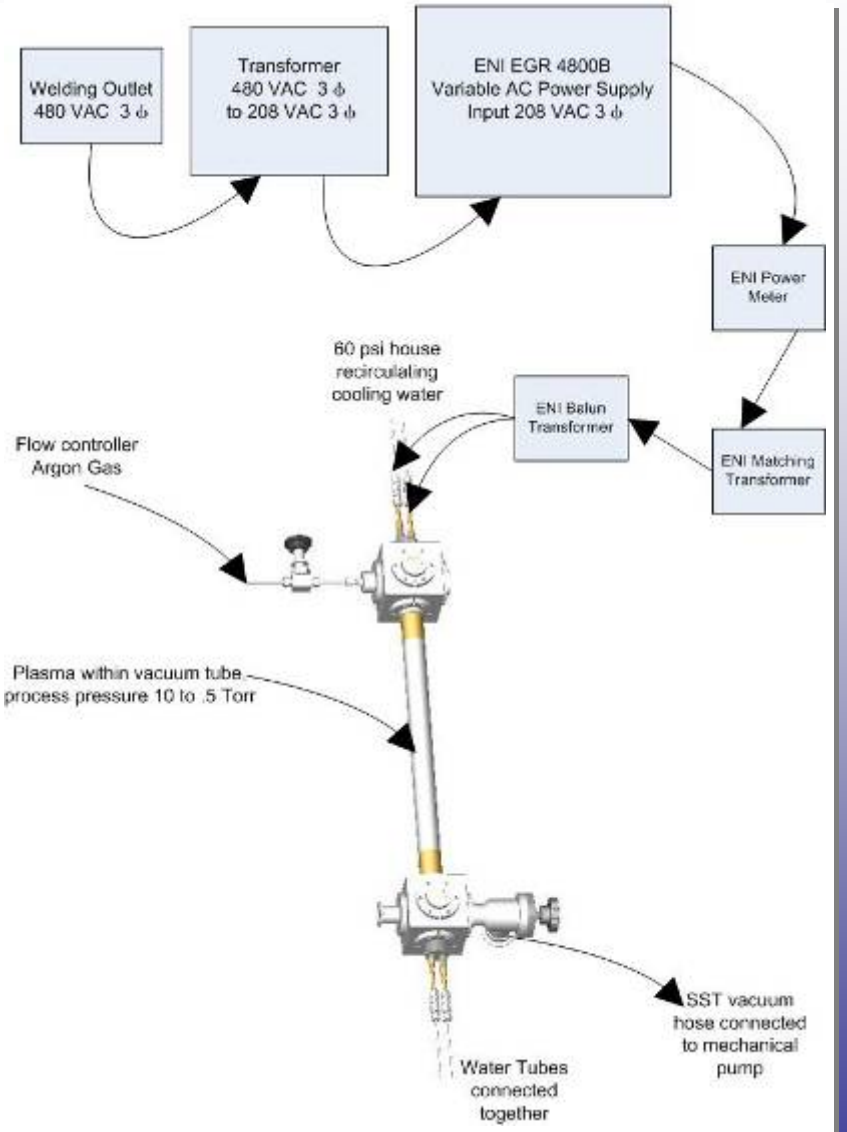

Coating 8 mm Glass

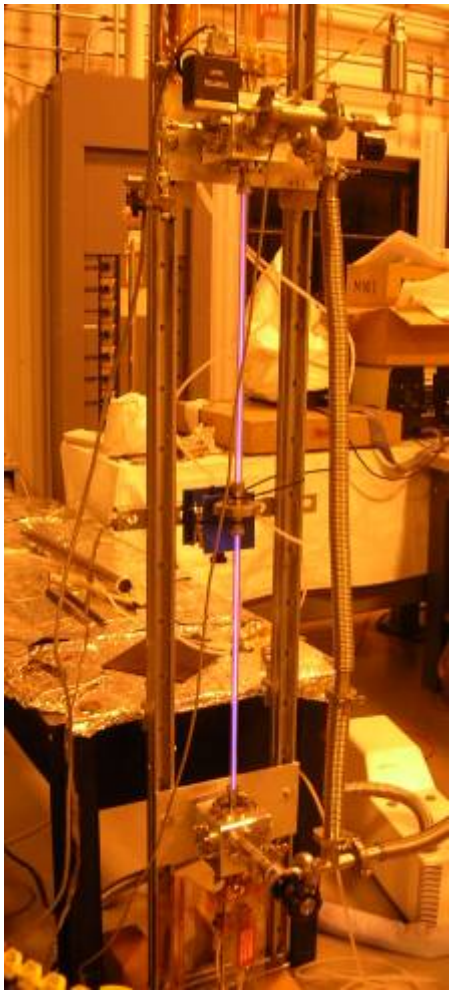

Coating the 42” Chamber

12 foot Coating Set-up

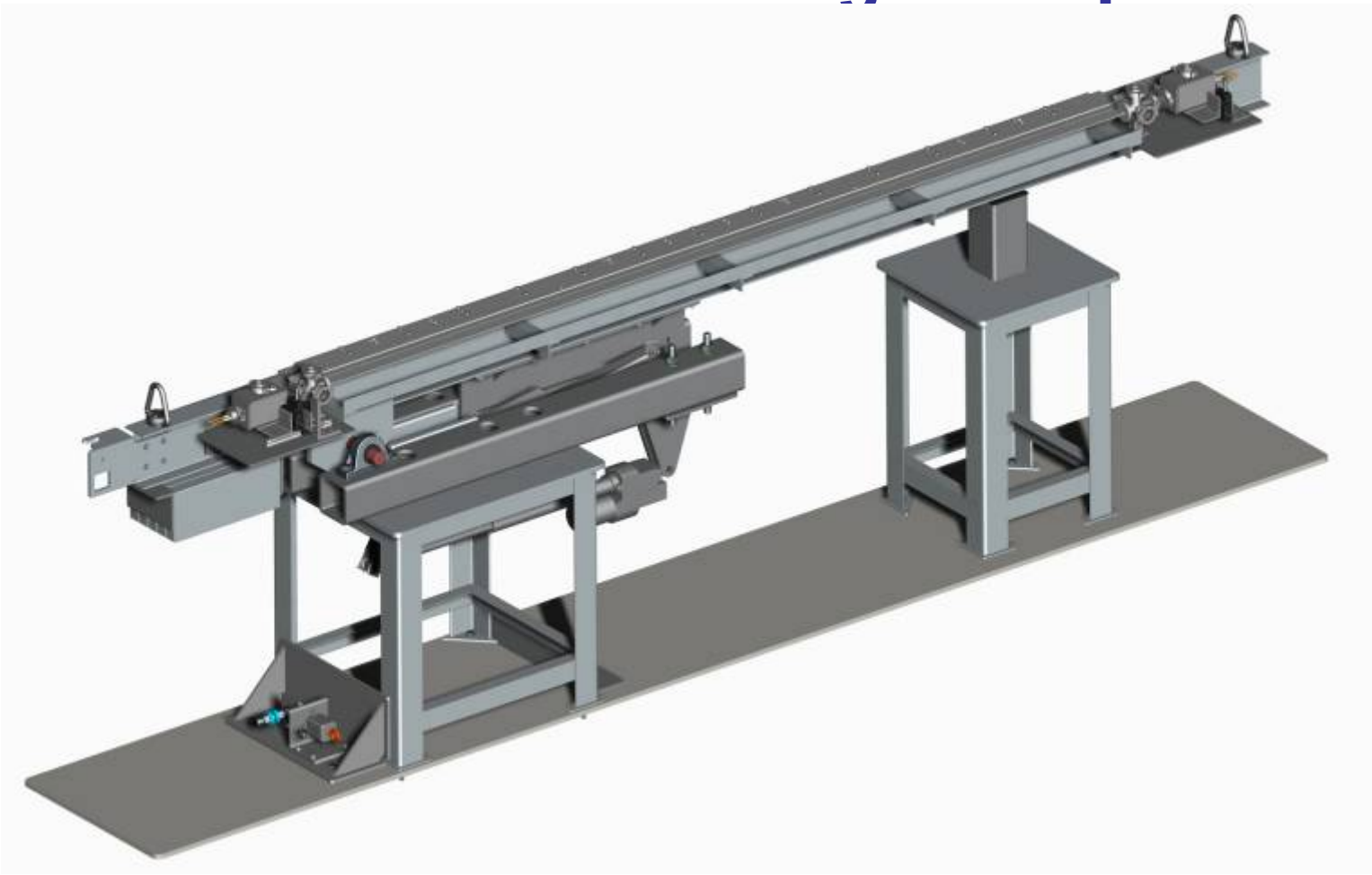

12 Foot Test – 2/2/2007

Coating of Proto A

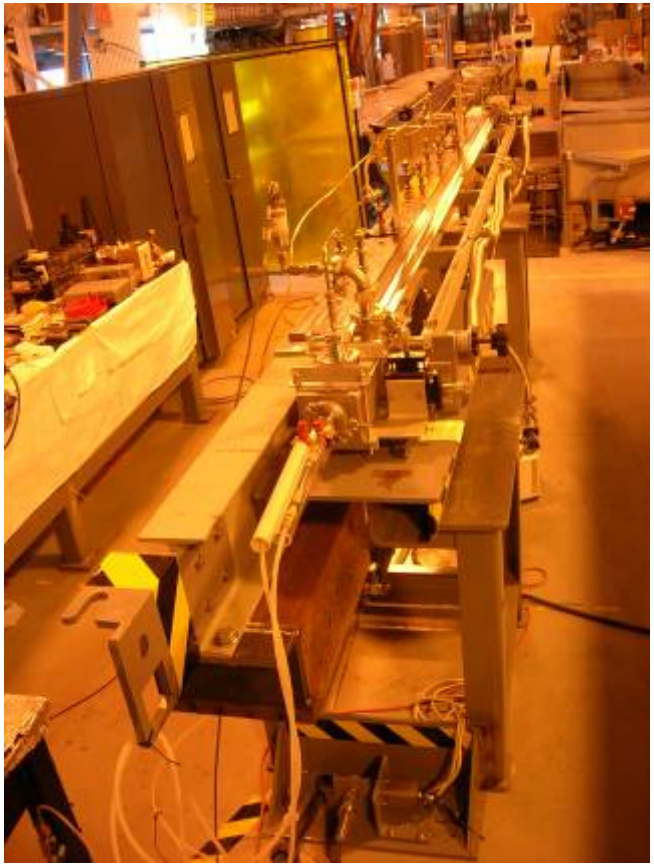

Performed on 16 Feb. 2007

Coating of Proto B

Performed on 9 Feb. 2007

Repeated on 13 Feb. 2007

Coating on Proto B

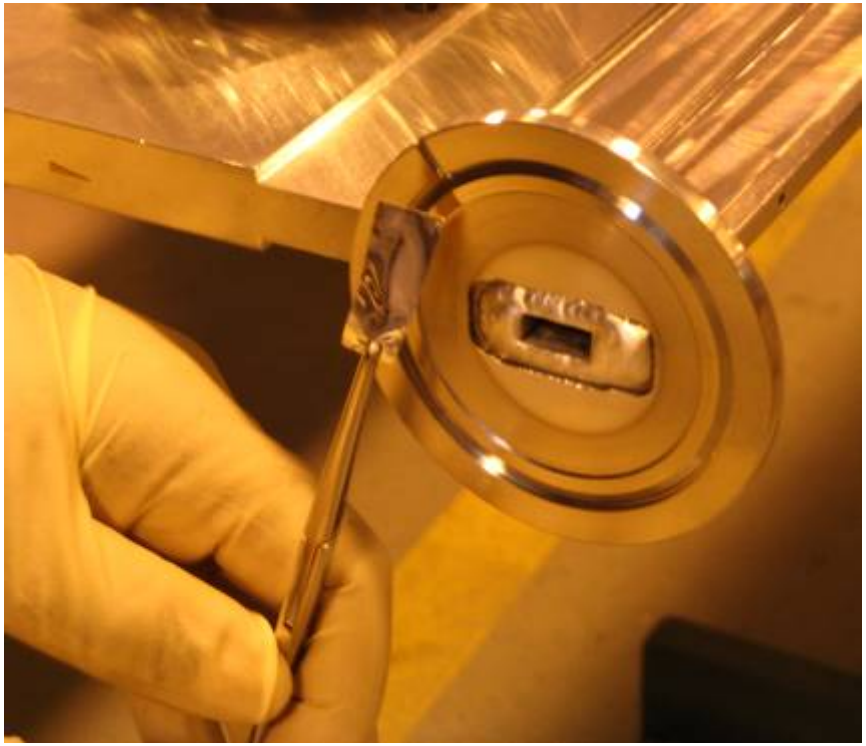

Summary of Tests

- Test of 30 Jan
  - First full Test
- Test of 2 Feb
  - Run with lower pressure and flow
- Test of 3 Feb
  - Run with equal length gas lines and vacuum lines.
- Test of 6 Feb
  - Repeat test of 3 Feb
- Test of 7 Feb
  - Test replacing 1.5” SST with .75” tubes
- First Coating of **Proto B**
  - Performed on 9 Feb
  - Good Results
- Test of 10 Feb
  - Set up with .75” SST and glass tubes
  - Similar conditions as Proto B
- Second Coating of **Proto B**
  - Performed on 13 Feb
- Coating of **Proto A**
  - Performed on 16 Feb
  - Measurements taken in the end stations: Upper end 510 nm, Lower end 530 nm

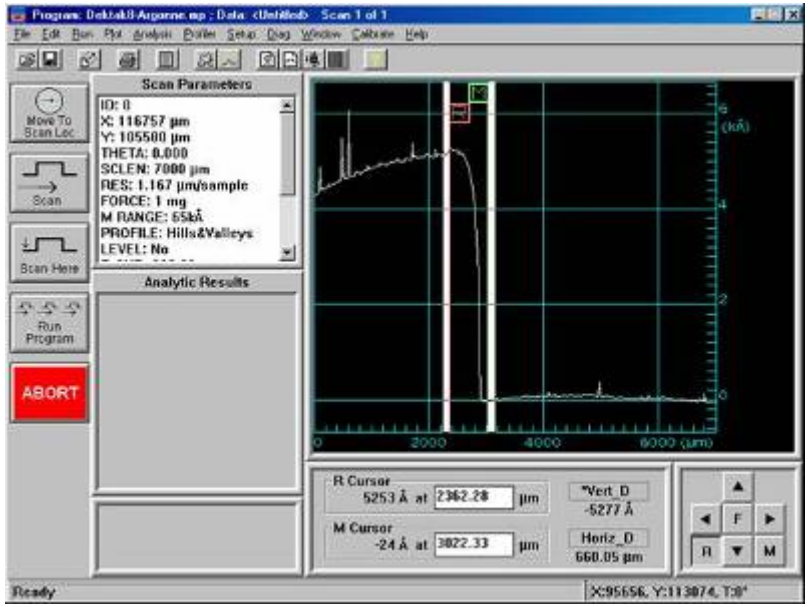

Baking the Prototypes

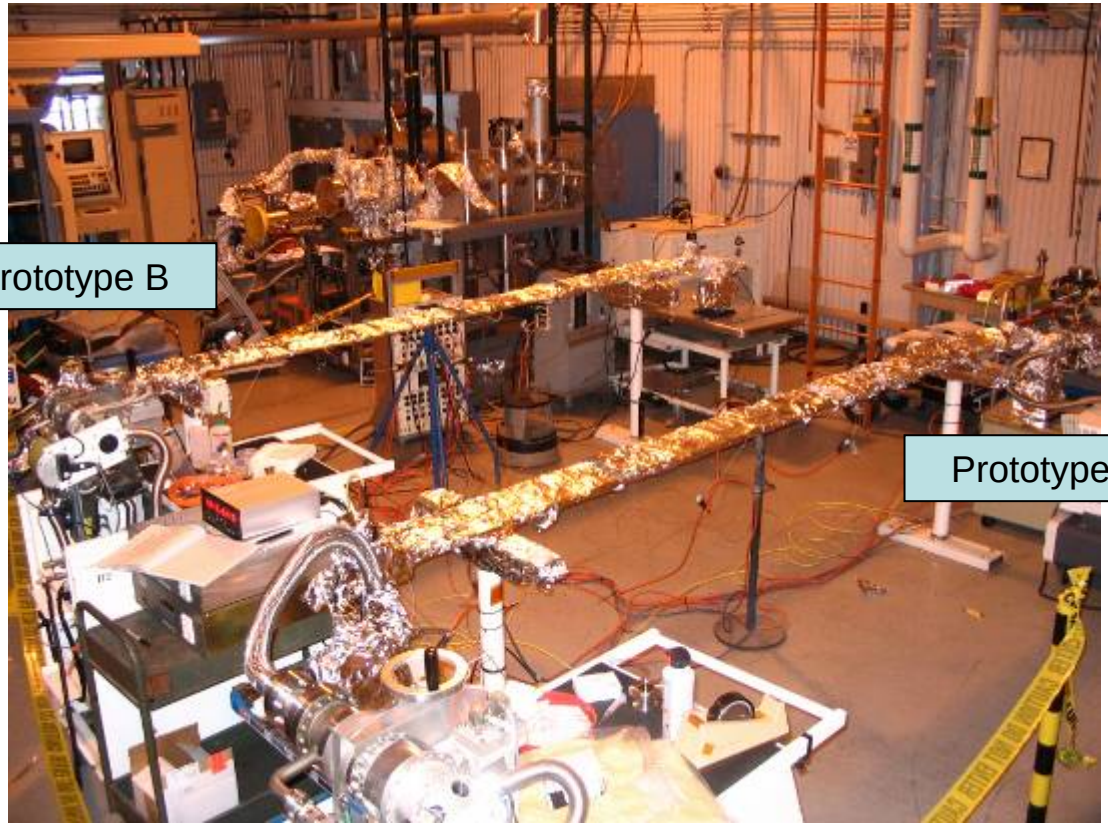

Baking of Prototypes A and B

- Proto B
  - 1st bake (before coating) at 200 deg C
  - 2nd bake (after coating) at 150 deg C
- Proto A
  - 1st bake (before coating) at 150 deg C
  - 2nd bake (after coating) at 150 deg C

Measurements of Vacuum Performance (Outgassing Rate Spec: $2x10^{-12}$ Torr-Lit/sec/cm^2)

- Proto B
  - Base Pressure : $5.9x10^{-9}$ / $1.1x10^{-9}$
  - Outgassing Rate : avg. of $6x10^{-13}$ Torr-Lit/sec/cm^2
  - Residual Gas analysis
- Proto A
  - Base Pressure : $2.2x10^{-9}$ / $2.5x10^{-9}$
  - Outgassing Rate : avg. of $3x10^{-13}$ Torr-Lit/sec/cm^2
  - Residual Gas Analysis

RGA

Prototype B

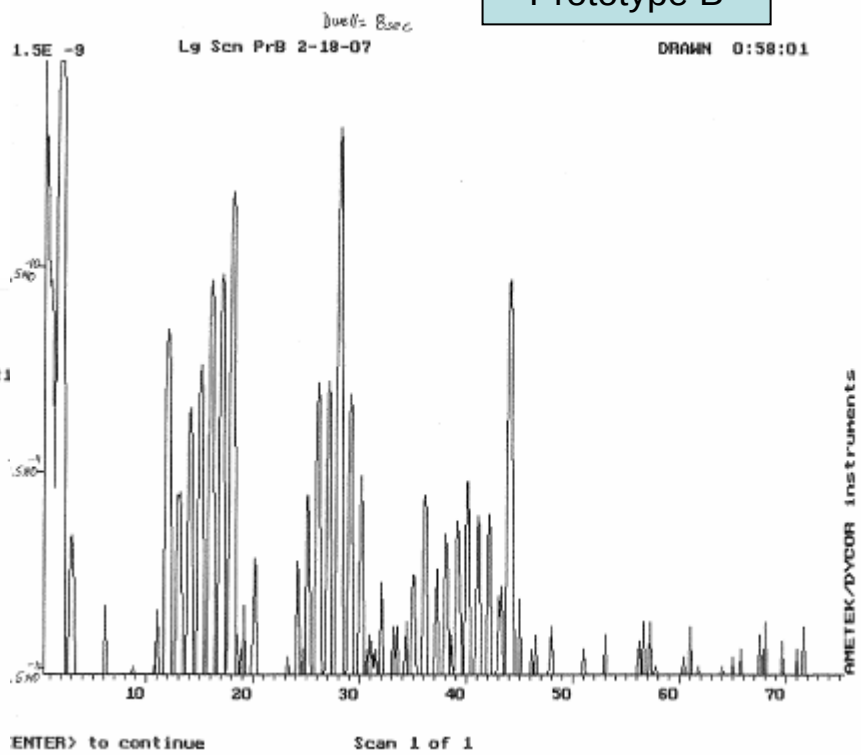

Prototype A

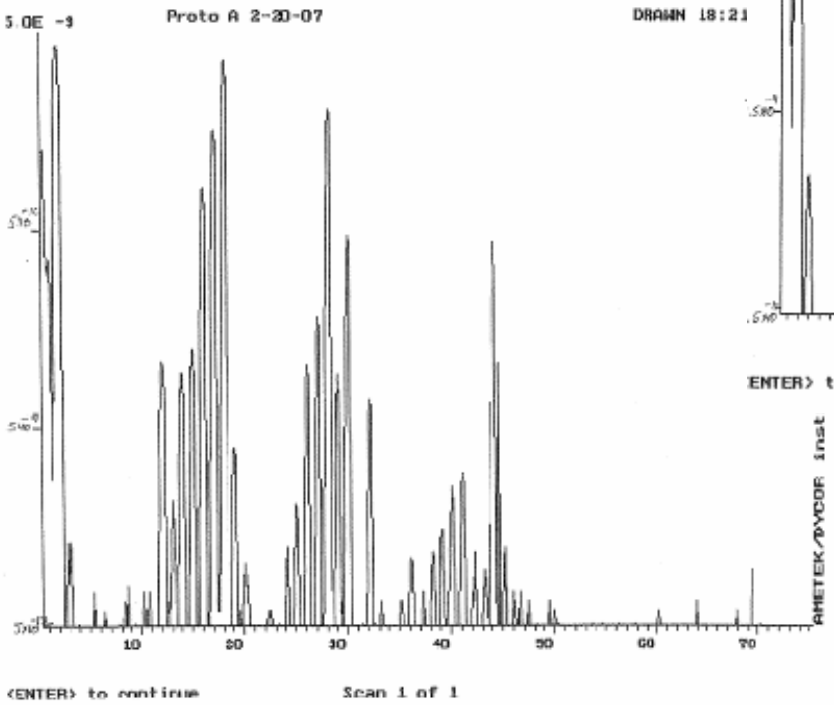

Status of Prototype Efforts

- 42 inch Prototype
  - Completed fabrication
  - Constructed Laser Welding tooling for 42” prototype
  - Leaks repaired with Ag braze
  - First coating
- Proto B (12 ft proto)
  - Completed all Fabrication’s steps
  - Constructed Laser Welding tooling for 12 ft prototypes
  - Repaired all leaks with Ag brazing and Sn-Ag-Cu soldering
  - Completed both Bakes & coatings
  - Installed into SUT for straightness measurement
- Proto A (12 ft proto)
  - Completed all fabrications steps
  - Repaired all leaks by Laser Welding
  - Completed both Bakes and Coating
  - Unit completed vacuum performance measurement
- Coating fixture in place and in use.
  - Pivoting fixture installed
  - All safety inspections complete
  - End stations complete

Preparations for Production

- Advanced Procurement Plan written and in the draft phase.
- All drawings for the chamber and the support have been completed and released.
  - Minor updates of a few drawings need to be finished.
- SOW for the machining of the strongback has been drafted.
- SOW for the end cap machining has been drafted.
- (4) Full sheets of polished 316LN have been bought, samples have had the surface finish measured and accepted for use.
  - Strips have been made from this material and used in Prototype A.
  - The (2) sheets are sufficient for the entire production run.
- Material for the first (4) strongbacks have been bought and are ready to be shipped to machining vendors.
  - Samples of material have already been submitted for permeability measurement and have been accepted.
- Material for the first (8) end caps have been bought and is ready to be shipped out.
- Tooling has been made, and used, for: machining the strongback, final machining, and laser welding.

Production Schedule

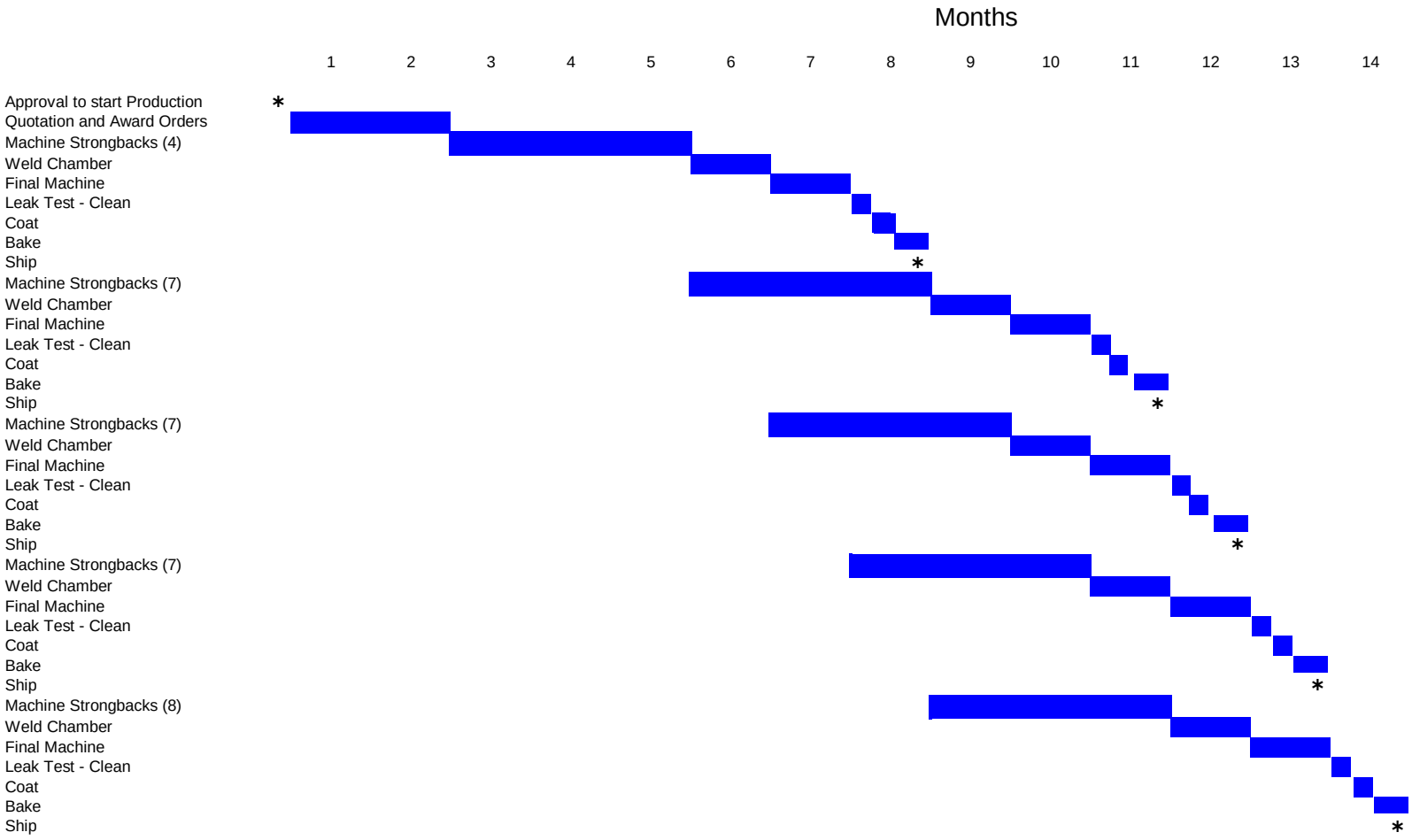

Cost

2. Estimated Cost (Procurement Estimate)

104040202	33	End Cap Machine	$3,233	$106,689
104040202	33	Strip Machining	$3,800	$125,400
104040202	33	Strongback Material	$4,267	$140,811
104040202	33	Strongback Machine	$16,333	$538,989
104040202	33	Laser Weld	$3,467	$114,411
104040202	33	Final Machine	$3,667	$121,011
104040202	33	Chamber Supports	$20,000	$660,000
				$1,807,311
2040402	4	End Cap Machine	$3,233	$12,932
2040402	4	Strip Machining	$3,800	$15,200
2040402	4	Strongback Material	$4,267	$17,068
2040402	4	Strongback Machine	$16,333	$65,332
2040402	4	Laser Weld	$3,467	$13,868
2040402	4	Final Machine	$3,667	$14,668
2040402	4	Chamber Supports	$20,000	$80,000
				$2,026,379

Concerns & Open Issues

- Have only identified only one Laser Welding vendor.
- Need additional qualified strongback machining vendor
  - Will need 2 for production
- Need to locate qualified Final Machining vendor
  - All Final Machining of prototypes were performed by ANL Central Shops.
- Continue coating development now that contact is reestablished with thin film consultant.
- Cost of Nickel is raising, pricing of Alloy 20 is subject to increase.
- Permeability of Alloy 20 is of concern, since the material used in Proto A is measurably lower in relative permeability, it permeability curve needs to be remeasured and the affect to the magnetic field needs to be simulated or measured.
- After performing a vacuum pumpdown string test, Proto B will be cut apart to inspect the internal surfaces.
- Proto A will be installed into the Long Term Test where it will be inserted into the first article Undulator.

Conclusions

- Two full sized prototypes have been built.
- All planned fabrication steps have been performed.
- The surfaces of the side walls have been proven to meet the specification.
- Seam Welds were performed by Laser Welding.
  - Even though leaks were found, they have been repaired and the chamber are now leak free.
- Aluminum coatings have been applied to both prototypes after the construction of the 12 foot fixture and initial development of the AC Diode Sputtering process.
- The chambers have been baked and their outgassing rate is lower than the specification
- Many preparations for production are in-process or in place. The time to get this design into production is very small.
- The time from approval to the completion of production is 14 months.