SIMULATING ELECTRON TRAJECTORIES IN THE ANGLE-RESOLVED PHOTOEMISSION SPECTROSCOPY CHAMBER*

by

Genevieve Boman**
Worcester Polytechnic Institute
Worcester, MA

Dr. Katherine Harkay
Accelerator Systems Division
Argonne National Laboratory

August 7, 2009

*Work performed at Argonne National Laboratory, a contract Laboratory of the United States Department of Energy

**Participant in the Summer 2009 Student Program. This program is coordinated by the Division of Educational Programs.

Table of Contents

Abstract	3
Introduction	4
Methods and Materials	5
Results and Analysis	10
Conclusions	12
Acknowledgements	13
References	15
Figures	16
Tables	20

Abstract

Simulating Electron Trajectories in the Angle-Resolved Photoemission Spectroscopy Chamber. Genevieve Boman (Worcester Polytechnic Institute, Worcester, MA 01609) Katherine Harkay (Argonne National Laboratory, Argonne, IL).

High-brightness electron sources are required for future free-electron x-ray lasers and x-ray energy recovery linacs. Fundamental cathode emittance is an important contributor to the final beam brightness. An experiment is planned which will measure the fundamental material properties of photocathodes, resulting in the design of materials with photoemissive properties optimized for ultra-low-emittance. The experiment will be conducted under ultra high vacuum in the angle-resolved photoemission spectroscopy chamber with low energy electrons. Under these conditions, stray fields will have significant effects on the trajectories of the electrons from the cathode to the anode. The system was therefore modeled using SIMION 8 software in order to analyze the effects of possible stray fields on electron trajectories. The bias voltage between the cathode and anode was optimized for the expected energy range of emitted electrons. It was determined that -15V on the cathode and 15V around the detector resulted in optimum collection of electrons while maintaining a low voltage. With this voltage configuration, a stray field of 0.3V did not seem to affect electrons with a kinetic energy of 0.07eV. Studies of electric field line orientations and their effects on electron momentum were conducted. Analysis revealed percent changes in electron momentum that reached into the high thousands. It is not yet known why this occurred and it made optimization of the bias voltage for parallel field lines virtually impossible. In addition, preliminary data on acceptance angles and the electrons' times of flight was gathered. The final angular acceptance and time of flight studies will be conducted with simulations based on those which were created for this project. Future work is required to test the SIMION software, determine the cause of the high percentage changes in momentum, and to begin work with the drift tube incorporated into the geometry.

Research Category: General Sciences

School Author Attends: Worcester Polytechnic Institute
DOE National Laboratory Attended: Argonne National Laboratory
Mentor's Name: Katherine Harkay
Phone: (630) 252-9758
Email address: harkay@aps.anl.gov

Presenter's Name: Genevieve Boman
Mailing Address: 5343 Lathrop Ave.
City/State/ZIP: Racine, WI 53403
Phone: (774) 253-7910
Email address: gboman@wpi.edu

Is this being submitted for publication? No
DOE Program: Lee Teng Internship

Introduction

Electron emission occurs when electrons in a material, called a cathode, are given enough energy to break free from the material in which they are bound. This energy can be transferred to bound electrons by shining a light on, inducing an electric field on, or heating a cathode. Photoemission, the effect that will be utilized for this experiment, occurs when photons transfer energy to electrons in a cathode. The emitted electrons have a spread in position and momentum which is defined, in part, by the cathode. This location in position and momentum phase space of a group of electrons is called the 'emittance' of the electrons.

Future free-electron x-ray lasers and x-ray energy recovery linacs (linear particle accelerators) require high brightness electron sources. Brightness is inversely proportional to emittance. The fundamental emittance of a cathode is an important contributor to the emittance of the final beam. In order to minimize fundamental emittance, an experiment is planned which will analyze the fundamental material properties of photocathodes. The goal is to designing materials with photoemissive properties optimized for ultra-low-emittance. The experiment is to be conducted under ultra-high-vacuum with low energy electrons in the Angle-resolved photoemission spectroscopy (ARPES) chamber.

The trajectories of low energy electrons from the cathode to the detector will be significantly affected by unwanted stray electromagnetic fields in the ARPES chamber. Simulations of the system were therefore created in SIMION version 8.0 with the

intention of analyzing the effects of possible stray fields on electron trajectories. However, within the limited work time for the project, it was first necessary to address other considerations, and the analysis of the effects of stray fields is in a preliminary form. The bias voltage between the cathode and anode was optimized for the expected energy range of emitted electrons. Studies of equipotential electric field line orientations and their effects on electron momentum were conducted. In addition, preliminary data on acceptance angles and the electrons' times of flight was gathered. Angular acceptance for a given voltage configuration is defined, for these studies, by the greatest and smallest instantaneous direction angles at the time of the creation of the electrons which later strike the detector. The final angular acceptance simulation data will be used by experimenters to determine the angle thorough which the detector should be rotated in between experimental trials, in order to record collection data from all angles with respect to the cathode. Final time of flight simulation data will be used to determine the needed resolution of the time of flight electronics. The preliminary time of flight data was analyzed as a check of SIMION's accuracy in representing reality.

Methods and Materials

SIMION software, developed by Scientific Instrument Services, Inc., simulates ion trajectories through user defined electrode or magnetic pole geometries. Only electrodes were used in this study. SIMION requires the user to set the voltages on any electrodes; it then solves for the potentials between electrodes by solving the Laplace equation. [1] Most physical effects must be invoked or defined by the user. For example: beam repulsion, ion scattering off of electrodes, and generation of secondary particles must all

be invoked by the user, and the quantitative details of the effects must be user-defined. A physical understanding of the situation is therefore required in order to make effective use of SIMION.

The geometry of the ARPES chamber was imported into SIMION from a CAD STL file. Figure 1 shows how the STL file appeared in SIMION before any modifications were made. The simulations began with only the detector and its supporting machinery. The rest of the chamber geometry was removed from the simulations. All parts of the geometry are necessarily defined as electrodes in SIMION. The software does not recognize different materials, only electrodes or magnetic poles. After being input into the software, different parts of the geometry were set as separate electrodes (the default is for the entire apparatus to appear to ions as being at a single voltage: 1V) and were assigned individual voltages. Since the cathode and its supporting arm were not part of the input geometry, a model of them was created in SIMION to serves as the source location of electrons. The dimensions of the cathode and supporting arm are accurate in the y and z directions. In the x-direction however, the geometry is nearly flat since, for the first approximation, this dimension of the geometry of the cathode and supporting arm does not interact with the electrons. Figure 2 shows the electrode geometry after modification. Figure 3 shows the coordinate system definition and the “flatness” of the cathode and supporting arm in the x-direction.

The first task was to decide where to put the bias voltage, and how large this voltage should be. The voltage can be placed either on the cathode, the drift tube, or both. Since

the drift tube is not included in these simulations, but will be added in later, test voltages were instead placed on the ring around the detector, which presents the same basic geometry to electrons in the YZ plane. Excluding the drift tube in these simulations allows us to build an understanding of a simplified geometry which represents the final, more complex, geometry and behaves in a similar way.

Simulation of a beam of photons creating electrons as secondaries is unnecessary since electron energy, momentum, position, and velocity can be specified directly in SIMION and can easily be assigned values to model photoemission. In addition, the exact parameters of incoming photons have not been set at this time. The simulations therefore begin just after electron creation at the cathode.

The initial spatial distribution of emitted electrons is Gaussian in two dimensions, y and z, with a standard deviation of 1mm. The central point of the distribution is lined up with the center of the detector. All electrons are created at the same location on the x-axis: the location of the surface of the cathode. In the absence of an electric field, the electrons spread out from the source following an hemispherical distribution. This allows for the consideration of all emittance angles, since this parameter is unknown at this time and will be studied by the final experiment.

The predicted range of emitted electron kinetic energies is 0.07eV to 1.66eV. [2] It was required to optimize the bias voltage for high kinetic energy electrons, low kinetic energy electrons, and field line orientation. High kinetic energy electrons need to be focused

onto the detector. Low kinetic energy electrons need have a high enough voltage placed on them so that they are not affected by stray fields. Most importantly, the field lines need to be parallel to the cathode so that the y and z components of the electrons' momentum are not altered during the electron's flight from the cathode to the anode.

In determining the optimum placement and magnitude of the bias voltage, the dependent variables we examined were the number of collected electrons and the percent changes in the y and z components of momentum of each electron. A total of 500 electrons were flown for each simulation.

A couple of steps were necessary in order to determine the number of electrons which struck the detector. The mouth of the detector is located at the x=166 plane and SIMION was set to output specific flight data at the moment of electron creation and when an electron crossed this plane. For an individual electron crossing the x=166 plane, SIMION output its instantaneous time of flight, position in x, y, and z, azimuthal and elevation direction angles (angles with respect to the x-axis and XZ plane, see Figure 5 for SIMION angle definitions), x, y, and z components of velocity, and its unique ion number to a text file. All data was output in delimited form and was then input into Microsoft Excel 2003. The target area- the area in which the detector is located- is a circle in the YZ plane with a radius of 7.5 units located at z=49, y=81.5. Therefore, in order to determine if an electron had hit the detector, the equation

$$(z-49)^2 + (y-81.5)^2 \leq 7.5^2$$

was applied to each electron's z and y coordinates at the point where it crossed the x=166 plane. Electrons whose coordinates satisfied this equation were counted and then used for further analysis.

For each electron which hit the detector, the percent change in the y and z components of the electron's momentum from its creation to when it hit the detector was calculated. The average and standard deviation of the percentage change values were also calculated separately for the y and z momentum components. All of these computations were performed in Excel.

The combination of the data on the total number of electrons hitting the detector for each voltage configuration and the calculations of percentage change in momentum was used to select the most favorable candidate for the optimum voltage configuration. There was then time to run a single simulation with this configuration and the addition of a stray field placed on electrode 7 (the first knob on the detector arm following the knob directly below the cathode, as shown in Figure 3). Data from this simulation was gathered and analyzed using the same methods as for the other simulations.

As stated in the Introduction, time of flight data and angular acceptance data was also recorded for the electrons which hit the detector. The time of flight data is just a number measured in microseconds, output by SIMION. The average time of flight for each voltage configuration was calculated in Excel. Angular acceptance was found using the

MIN and the MAX commands in Excel to find the largest and smallest initial angles of the electrons which went on to strike the detector.

Results and Analysis

All of the data used for optimization of the bias voltage is shown in Tables 1 and 2. The number of collected electrons follows a predictable and intuitive pattern. In general, the data shows that increasing the bias voltage or decreasing the initial kinetic energy increases the number of electrons striking the detector. Decreasing the bias voltage or increasing the initial electron kinetic energy decreases the number of electrons which strike the detector. However, at the higher kinetic energy and lowest voltage values, this pattern does not seem to hold. The seemingly unpredictable behavior may be due to the closeness in magnitude of the two lowest test voltages and the electron kinetic energy. As the stray field simulation shows, -15V on the cathode and 15V on the ring is more than enough to overcome the defocusing effect of a stray field of 0.3V placed on electrode 7. The stray field simulation showed 168 electrons striking the detector. This is comparable to the number collected when the same simulation was run with same voltage configuration but without the stray field: 149.

The results of the calculations of percentage change in momentum are troubling. 5%-10% changes would be acceptable, but changes into the high thousands were observed. To try and understand this, graphs were made of electron initial direction angles vs. percent change in momentum. An example of one such graph is shown in Figure 4. The graph shows a cluster around the origin with a wider distribution in the horizontal direction than

in the vertical direction. It also shows a few outliers with percent changes in the thousands. This description characterizes the graphs of most of the voltage configurations. The extremely large percent changes all occur at small initial angles. At this time, it is uncertain why this is occurring. Most of the electrons with similarly small initial angles do not have blown up percent changes in momentum. Unfortunately, even ignoring the outliers, the percentage changes in momentum are unacceptably large. Most are greater in magnitude than 100% and no obvious pattern emerges. There may be an overall trend towards smaller percent changes when small voltages are used, but the data is so varied that many more simulations would need to be run in order to confirm or disprove this.

The time of flight data, on the other hand, is well behaved. It varies from one electron to the next in a sufficiently random manner, but falls within well-defined boundaries, as shown in the example graph in Figure 6. It also follows what one would intuitively expect: electrons that start out at higher initial angles with respect to the detector take longer to curve around and strike the detector. This is illustrated in Figure 7. The average time of flight for each configuration is given in the rightmost column of Table 3.

The angular acceptance data appears to be approximately symmetric over the positive and negative angles. This is what one would expect since the geometry of the cathode and ring is symmetric and should generate approximately symmetric field lines (without taking the effects of nearby electrodes into account). The angular acceptance data is given in Table 3.

Conclusions

The suggested voltage configuration, optimized for high and low kinetic energy electrons is: -15V on the cathode and 15V on the ring (later, drift tube). The nature of the momentum data makes identifying an ideal bias voltage extremely difficult at this point. The priority in optimizing the voltage was to have parallel field lines so that there would be minimal change in the electrons' y an z momentum components. Since, at this point, the data shows only the possibility of a trend towards greater momentum conservation at lower bias voltages, this was taken into light consideration when selecting the optimum voltage to suggest for further testing. The more important limiting factor on the voltage was the simple fact that lower voltages are easier to work with.

Work needs to be done to determine why the percentage changes in momentum are so large. It is possible that computation errors are to blame, however, the equations and computations have been re-checked and so-far no errors have been detected. Even if the outliers can be thrown out, much modification of the internal ARPES chamber geometry may be necessary in order to achieve the necessary parallel field lines.

Preliminary angular acceptance and time of flight data shows general agreement with expectations. This is an indication that the data output by SIMION does represent reality. Further studies of SIMION, however, are necessary. It is suggested that data should be gathered at many points, rather than just at the cathode and detector locations. This would allow for a better check of the SIMION software, since the data could be analyzed for

oddities as the simulation progresses, rather than trying to piece together what has occurred with just the end-of-flight data.

The current time of flight data suggest that sub-microsecond ($10^{-2}\,\mu s$) resolution may be needed. However, this is likely to change after the drift tube is put in place, since electrons in the drift tube will be shielded from fields. In addition, the spacing between the cathode and the detector, currently set at 3 inches, may be altered in future simulations. This will certainly alter the average times of flight.

Many of the parameters of the experiment are not set at this time. The geometry within the ARPES chamber, including the exact location of the cathode and detector and the length, thickness, and aperture size of the drift tube through which electrons will flow to reach the detector, will all be set through work with the simulations that have been created. Future simulations which will be used to conduct studies of the acceptance angle and the time of flight of electrons will also be based on the currently existing simulations. An example geometry with the drift tube in place was created in SIMION and may be used as a reference for the creation of future electrode geometries.

Acknowledgements

I would like to thank the United States Department of Energy- Office of Science and Argonne National Laboratory for giving me the opportunity to participate in the Lee Teng Internship program this Summer 2009.

I am very grateful for my mentor, Dr. Katherine Harkay, for all of her guidance and for giving me the opportunity to work on this project. Thanks also to Dr. Marion White for her assistance and helpful suggestions.

The work described in this paper was performed at the Advanced Photon Source located at Argonne National Laboratory, a national scientific user facility sponsored by the United States Department of Energy.

References

[1] Manura, David J., & Dahl, David A. (2008). SIMION Version 8.0 User Manual. (pp. 2-2). Ringoes, NJ: Scientific Instrument Services, Inc.

[2] L. Spentzouris, K. Harkay, Y. Li, K. Nemeth, R. Rosenberg, M. White, Characterization of photo-emitted electron intrinsic emittance using ARPES in the L0109 surface lab (2009).

[3] Manura, David J., & Dahl, David A. (2008). SIMION Version 8.0 User Manual. (pp. L-10). Ringoes, NJ: Scientific Instrument Services, Inc.

Figures

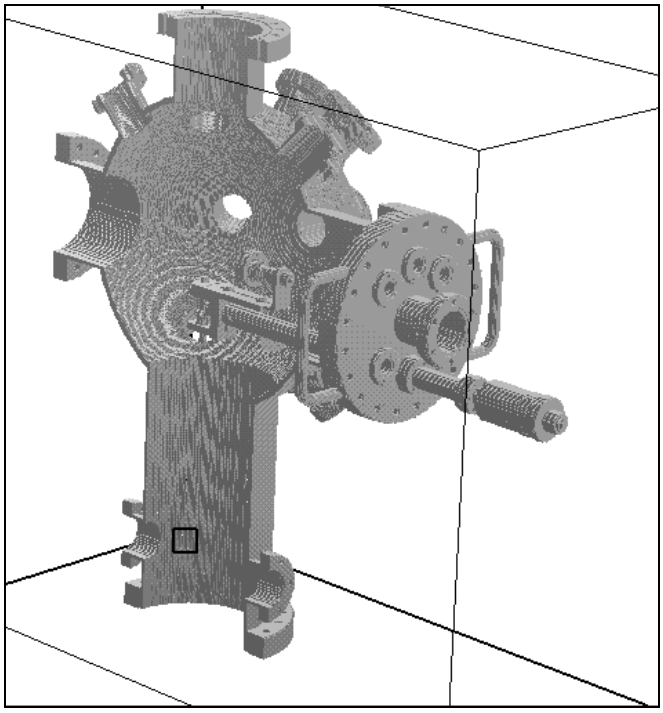

Figure 1. The ARPES chamber as it appeared when input into SIMION before any modifications were made.

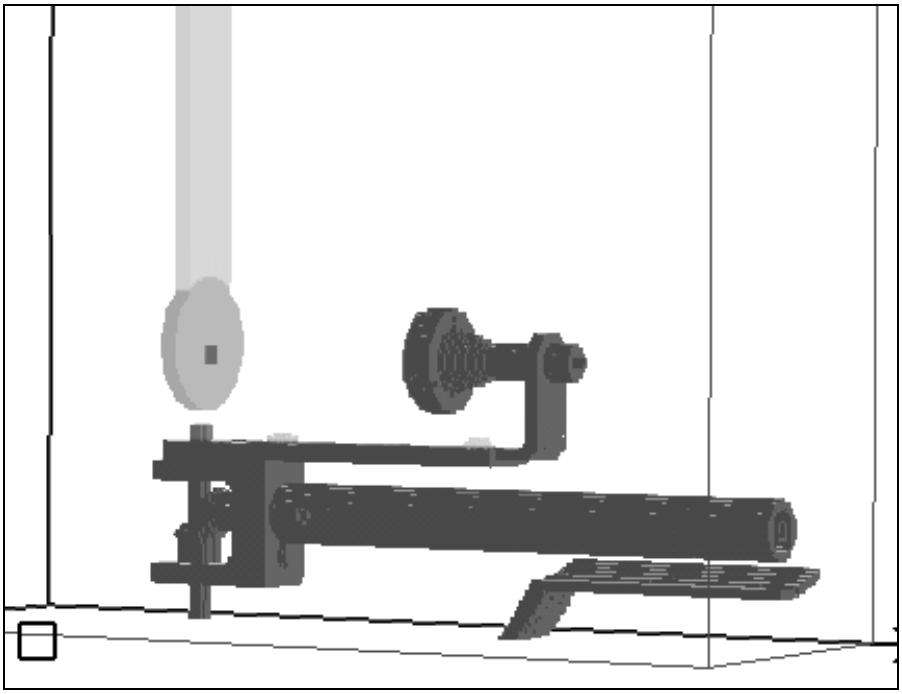

Figure 2. The electrode geometry after all modifications. The small square in the center of the thin circular disk is the cathode.

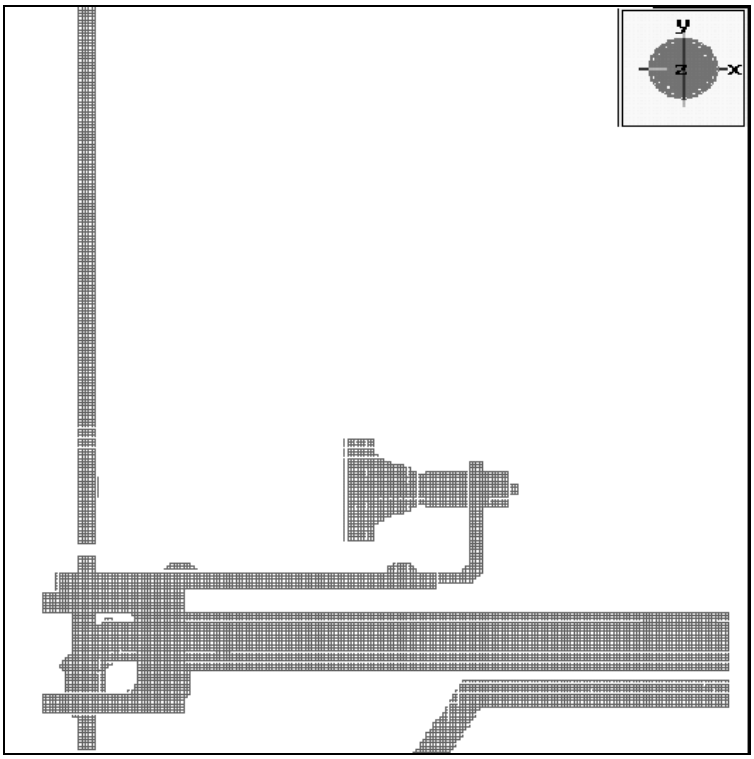

Figure 3. An XY view of the electrode geometry in SIMION.

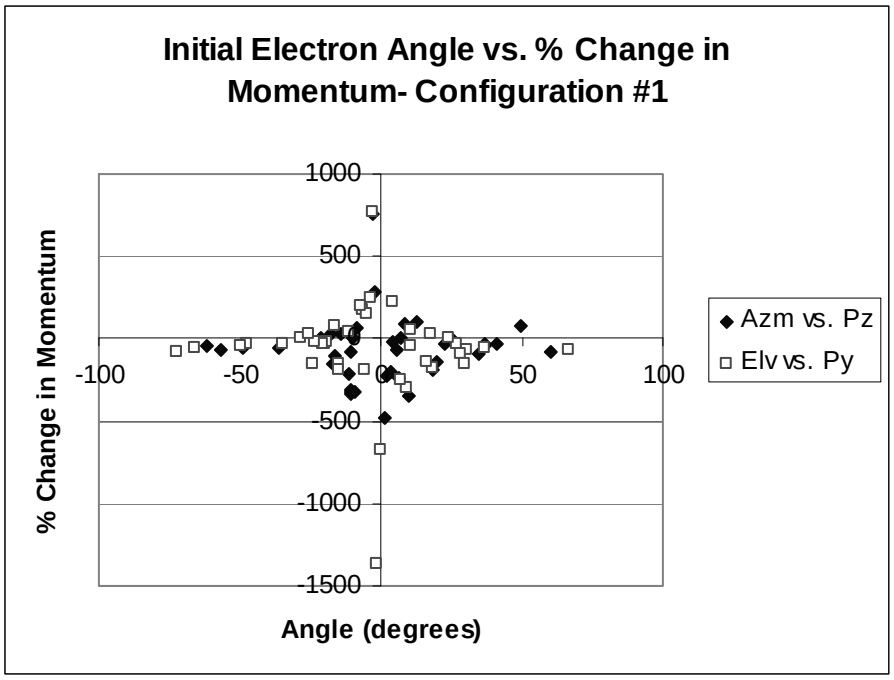

Figure 4. An example graph showing electron initial direction angles vs. percent change in momentum components. The solid diamonds show the azimuthal angle

vs. the percent change in the z-component of momentum. The empty squares show the elevation angle vs. the percent change in the y-component of momentum.

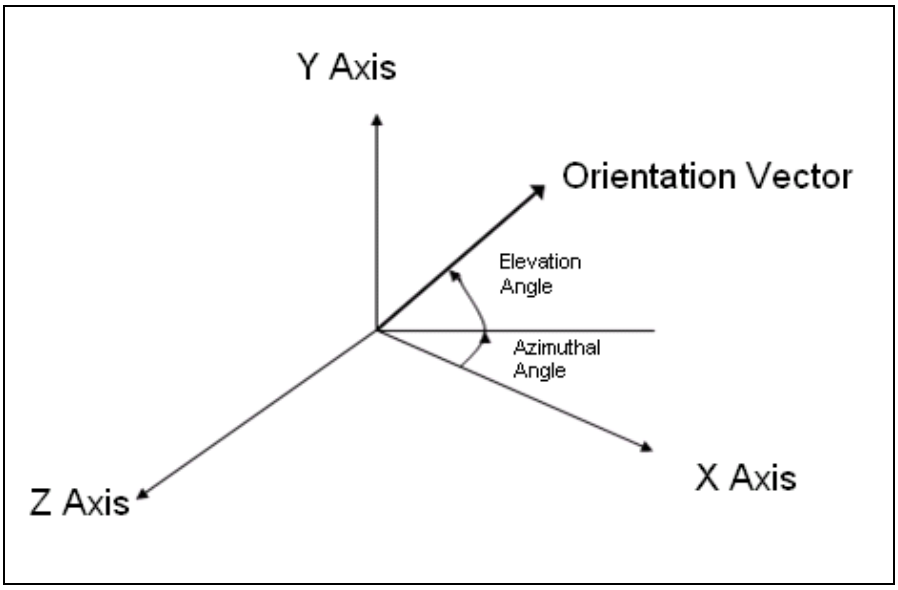

Figure 5. Definition of angles in SIMION. [3]

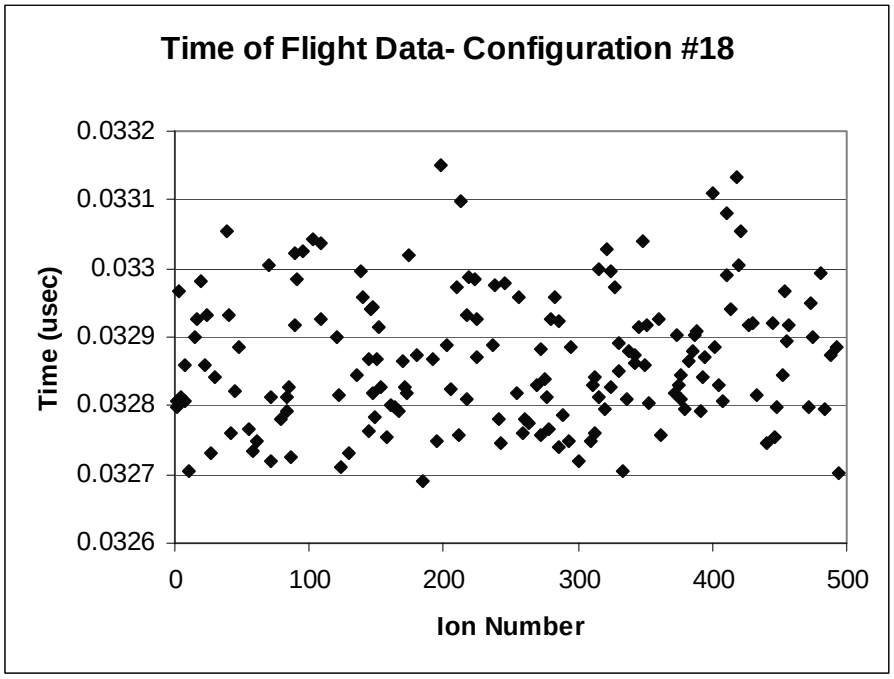

Figure 6. Time of flight per electron. 500 electrons are flown and each electron has an "ion number" by which it can be individually identified. All of the flight times fall nicely within the bounds of 0.0332-0.0326 microseconds.

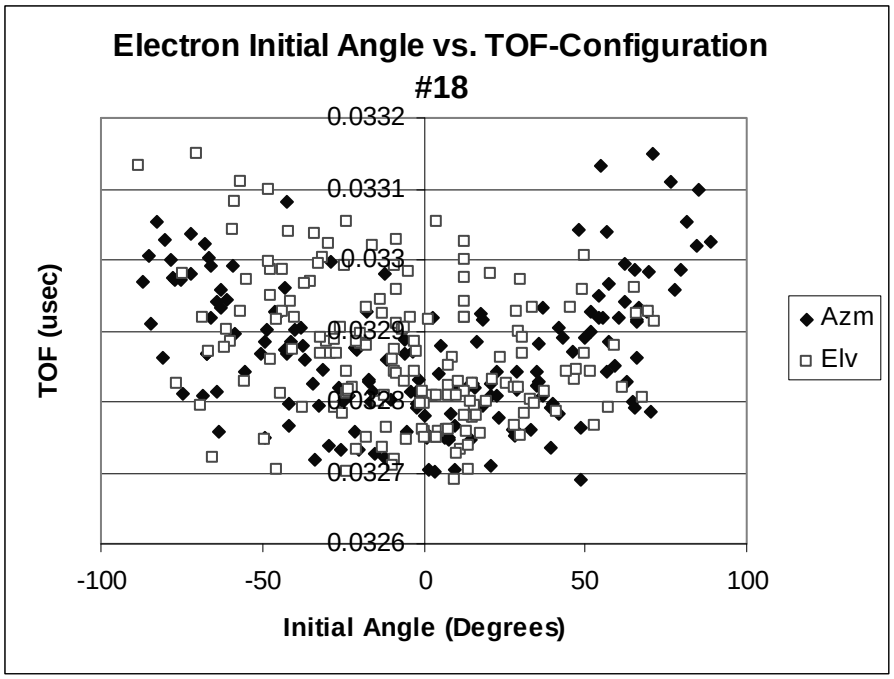

Figure 7. Time of flight data vs. electron initial angles. The solid triangles show the initial azimuthal angles, the empty squares give the initial elevation angles.

Tables

Configuration # (identification number)	Electron Initial Kinetic Energy (eV)	Voltage (V)	# of electrons hitting target area	Average % Change in Py	Standard Deviation	Average % Change in Pz	Standard Deviation
1	0.07	-2	39	-62.7	298.1523	-72.4	201.3
2	0.07	-5	71	-119.8	1026.559	-75.7	244.8
3	0.07	2	27	-337.6	298.4705	525.5	1203.1
4	0.07	5	78	-431.6	628.4546	26324	169056.8
5	0.07	-2	43	-63.4	719.7418	7.4	1372.3
		2					
6	0.07	-5	93	-374.7	4510.274	-1118.6	18543.4
		5					
7	1.66	-2	4	-112.5	111.3107	-66.5	187.8
8	1.66	-5	8	-6	229.9869	0.1	115.1
9	1.66	2	1	89.2	0	146.1	0
10	1.66	5	3	-163.7	5477.377	327.1	96.4
11	1.66	-2	2	-43.3	50.32408	1348.3	1636.8
		2					
12	1.66	-5	3	-112.8	31.63225	31.7	73.8
		5					
13	1.66	-10	9	494	1573.705	-45.4	169.6
		10					
14	0.07	-10	135	66.6	2048.128	85.29	1860.3
		10					
15	1.66	-20	22	29.7	862.1452	-24856.2	112676
		20					
16	1.66	-15	15	-17.5	194.8374	172.3	826.4
		15					
17	0.07	-15	149	100.3	3944.605	-136.3	1148.8
		15					

Table 1. The data used to select an optimum voltage configuration. Negative voltages are placed on the cathode. Positive voltages are placed on the ring around the detector. Configuration number is a voltage configuration's unique identifying number.

Configuration # (identification number)	Electron Initial Kinetic Energy (eV)	Voltage (V)	Voltage placed on:	# of electrons hitting target area	Average % Change in Py	Standard Deviation	Average % Change in Pz	Standard Deviation
18	0.07	-15	Cathode	168	24892.4	310112.3	-251.5	3020.3
		15	Ring					
		0.3	Electrode 7					

Table 2. The data from the single simulation run with a stray field.

Configuration #	Lower bound of azimuthal angular acceptance range (degrees)	Upper bound of azimuthal angular acceptance range (degrees)	Lower bound of elevation angular acceptance range (degrees)	Upper bound of elevation angular acceptance range (degrees)	Average time of flight (usec)
1	-61.5	60.3	-72.5	66.5	0.093
2	-90.0	85.0	-83.3	83.7	0.060
3	-12.5	8.5	-53.8	-5.1	0.304
4	-18.7	23.6	-75.2	-4.7	0.226
5	-48.0	54.5	-66.9	36.2	0.088
6	-84.3	86.5	-78.2	75.8	0.057
7	-6.9	9.8	-7.1	1.6	0.068
8	-14.9	21.2	-10.0	14.2	0.051
9	5.7	5.7	-5.0	-5.0	0.091
10	-5.9	5.1	-3.0	0.2	0.084
11	-1.7	-0.1	-11.5	-9.8	0.065
12	-4.5	11.3	-14.2	6.0	0.048
13	-14.9	11.5	-12.3	15.6	0.037
14	-88.0	88.1	-84.8	79.1	0.040
15	-21.8	46.0	-43.4	22.1	0.027
16	-32.1	16.3	-21.1	19.5	0.031
17	-89.5	90.0	-81.6	81.9	0.033
18	-86.8	88.6	-88.4	71.7	0.033

Table 3. The largest and smallest initial direction angles of electrons which struck the detector and the average time of flight of electrons per voltage configuration. For configuration 9, only one electron struck the detector. That electron's initial direction angles are therefore both the maximum and minimum accepted angles.