Argonne NATIONAL LABORATORY

... for a brighter future

TROUBLESHOOTING THE APS STORAGE RING GAP VOLTAGE AGC SYSTEM

Doug Horan

2/1/08

U.S. Department of Energy

UChicago Argonne LLC

Office of Science
U.S. DEPARTMENT OF ENERGY

A U.S. Department of Energy laboratory managed by UChicago Argonne, LLC

What does the Gap Voltage AGC System Do?

- It maintains constant rf gap voltage to counteract the effect of beam loading on the rf cavities:

  → *The storage ring beam extracts energy from the rf cavities, lowering the Q of the cavities, reducing the amount of rf gap voltage produced across the cavity gap for a given rf input power.*

  → *The AGC system increases or decreases the rf power supplied to the rf cavities to compensate for the effects of beam loading .*

  → *RF power is controlled by modulating klystron mod-anode voltage, which changes the beam power input to the klystron.*

Gap Voltage AGC Control Screen

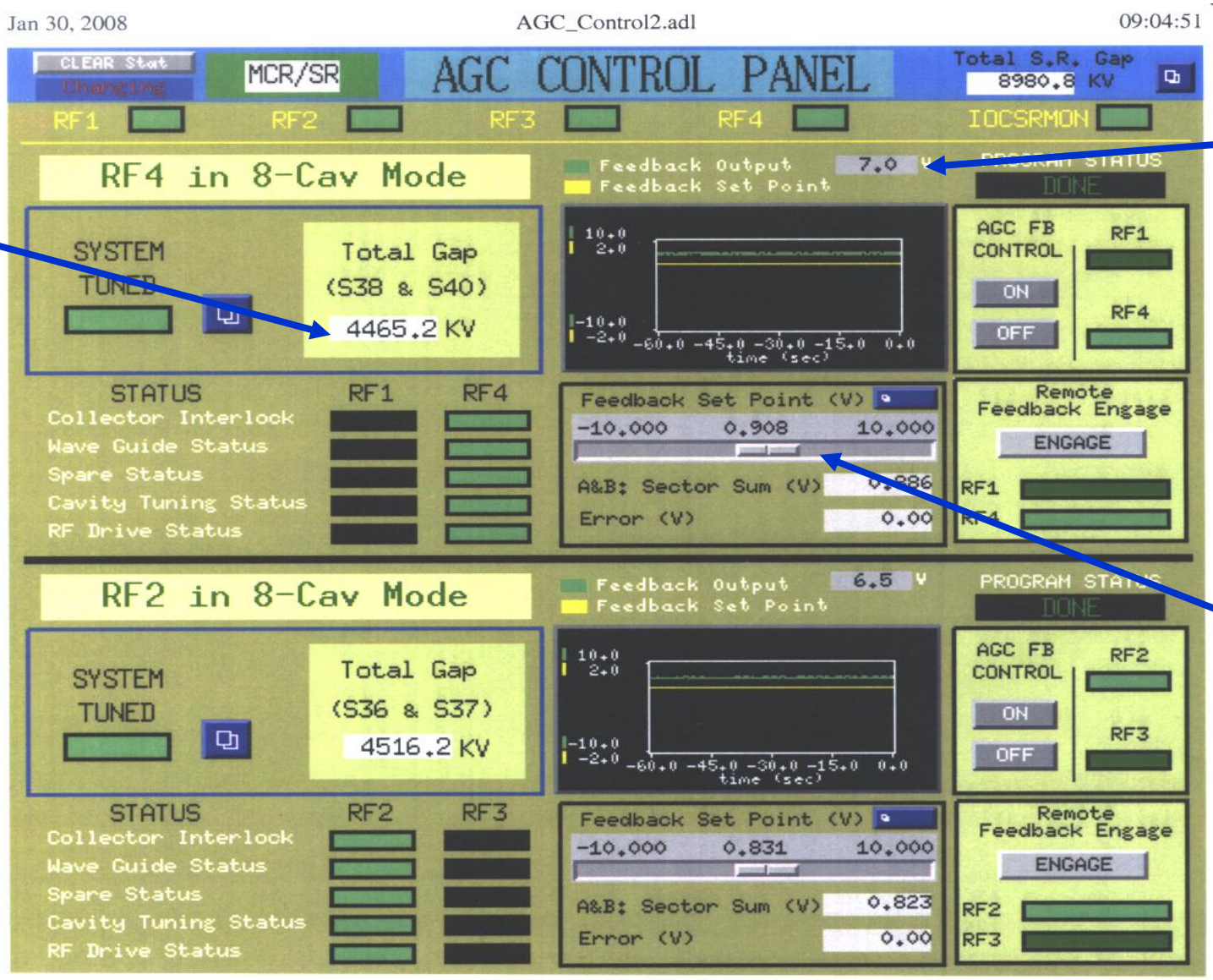

RF gap voltage readback

Feedback card output voltage

AGC setpoint adjustment control

RF Power Supply Control Screen Under AGC Control

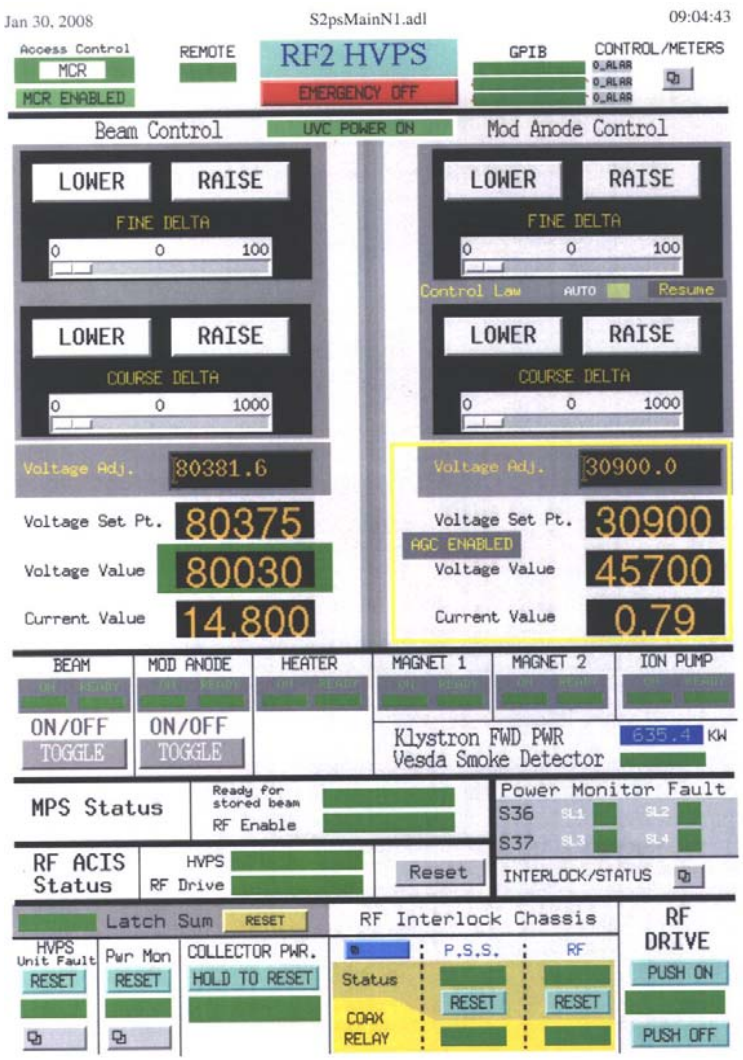

- **How do you know that the AGC system is on and engaged?**

The actual mod-anode voltage is greater than it's manual setpoint.

A yellow border is present around the mod-anode metering display.

Gap Voltage AGC System Diagram

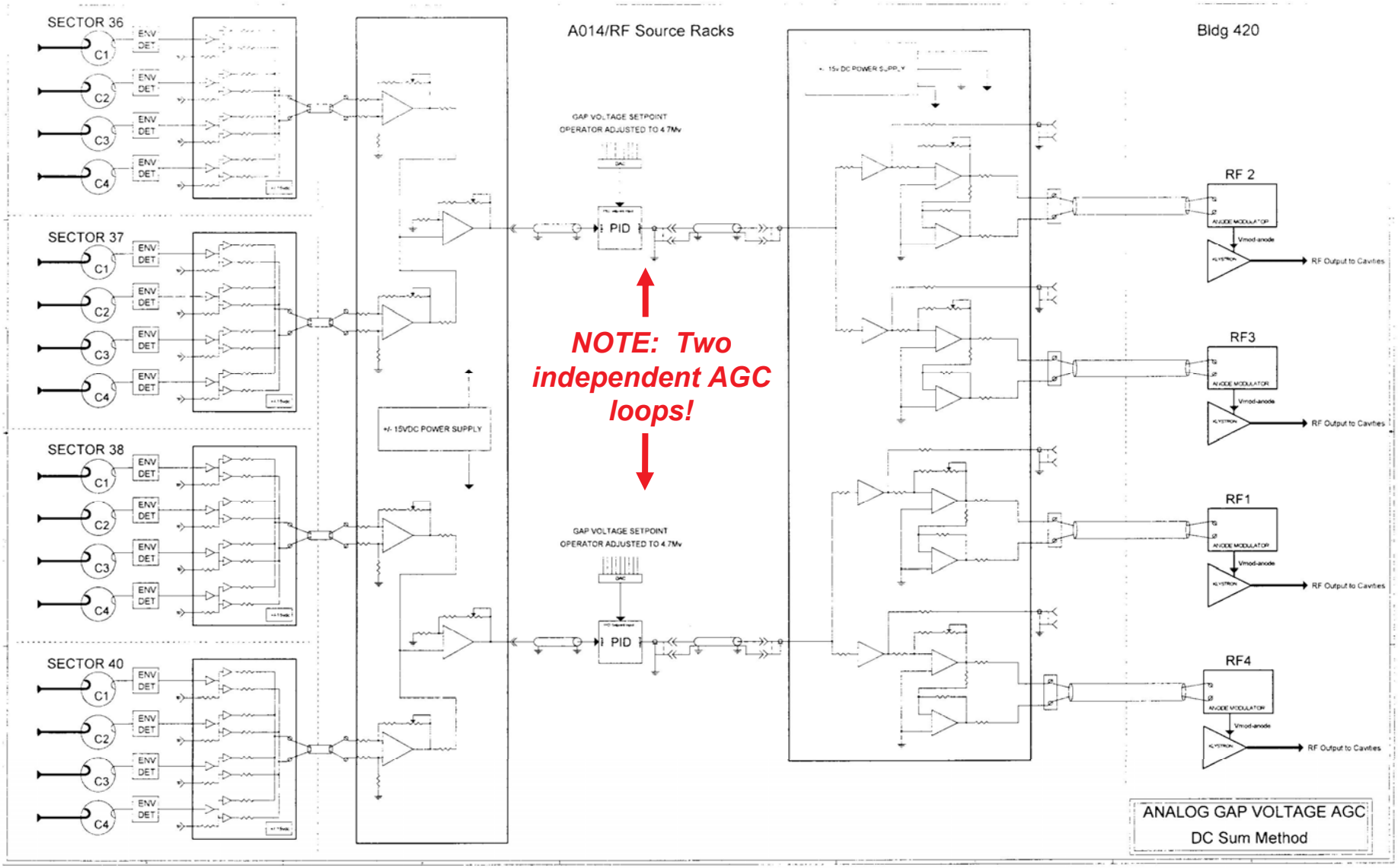

Gap Voltage AGC System Single-Line Diagram

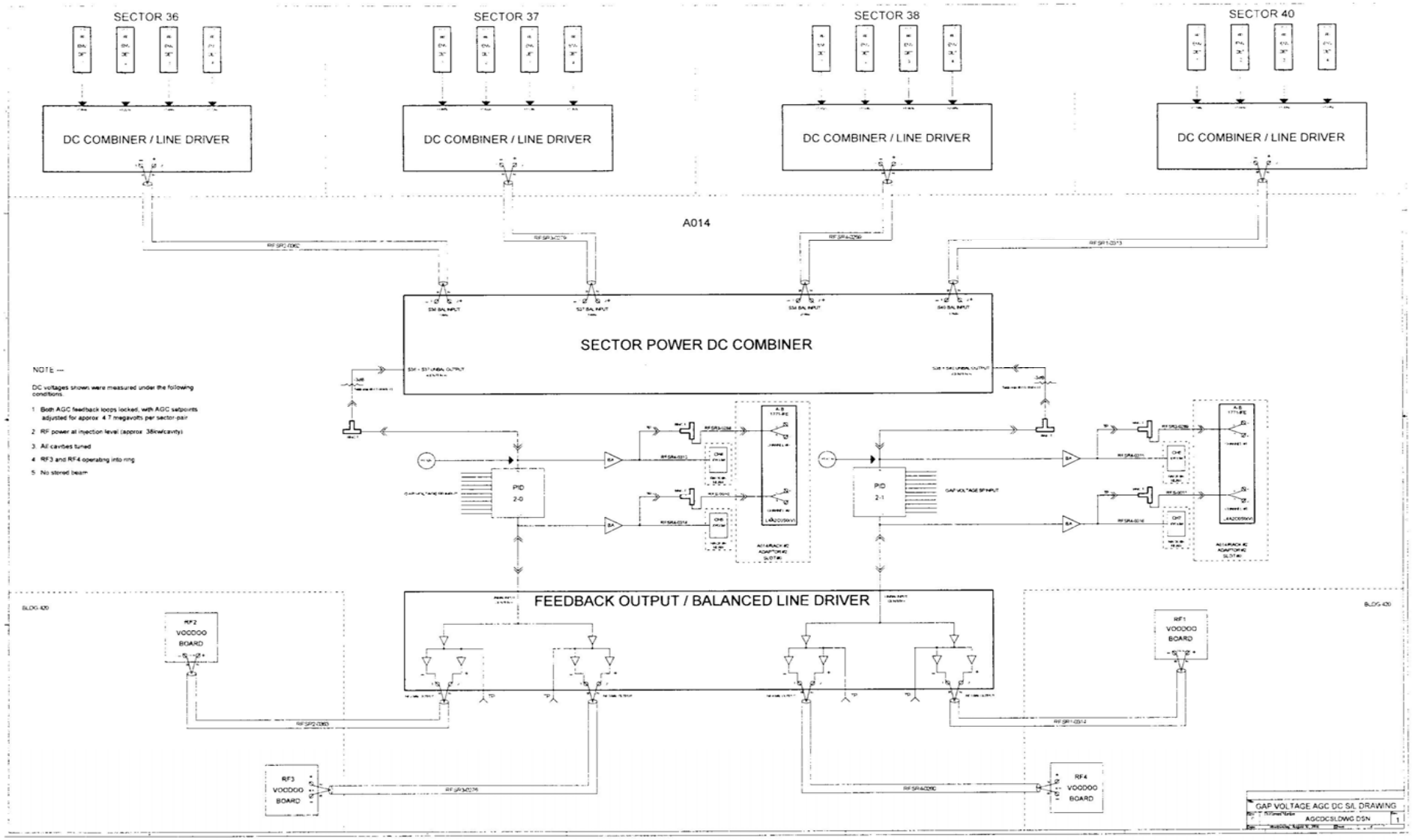

Gap Voltage AGC Installation in A014

- Feedback boards and delegation switches are located in the RF Source rack:

  Room A014/Rack #9

- One standard-issue feedback card is used for both AGC loops: ***PID 2-0 and 2-1***

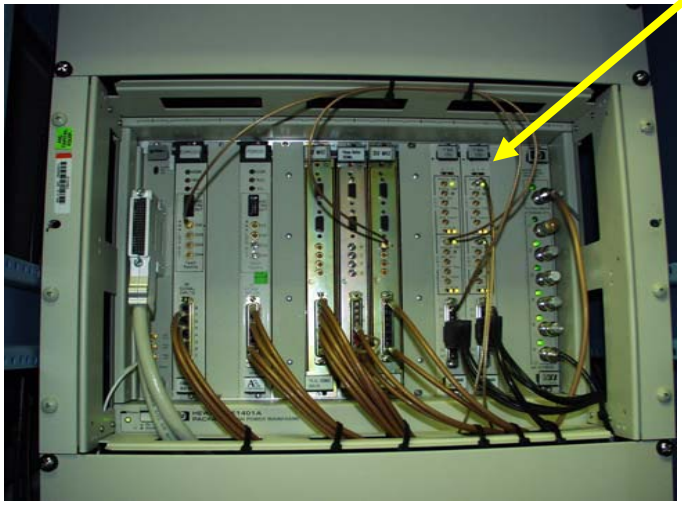

AGC Envelope Detector Line Driver

- **Inputs the analog output of each cavity field probe envelope detector in a sector, converts the single-ended signal into a balanced signal, and then combines the four balanced signals into one balanced output signal.**

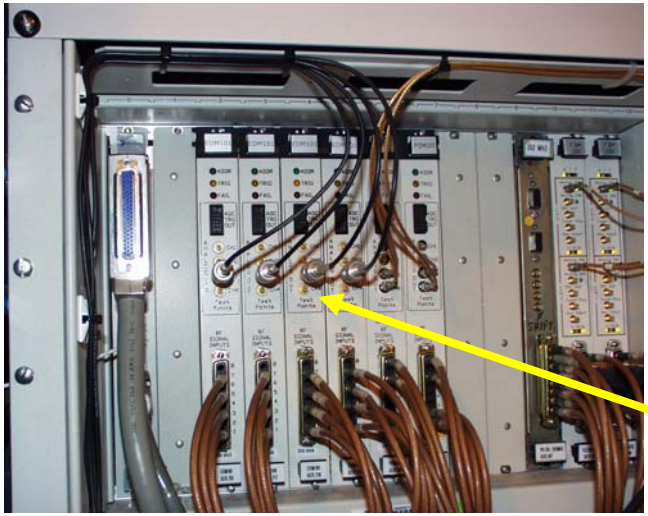

AGC envelope detector line driver chassis

Envelope detector analog output cables

AGC Envelope Detector/Line Driver

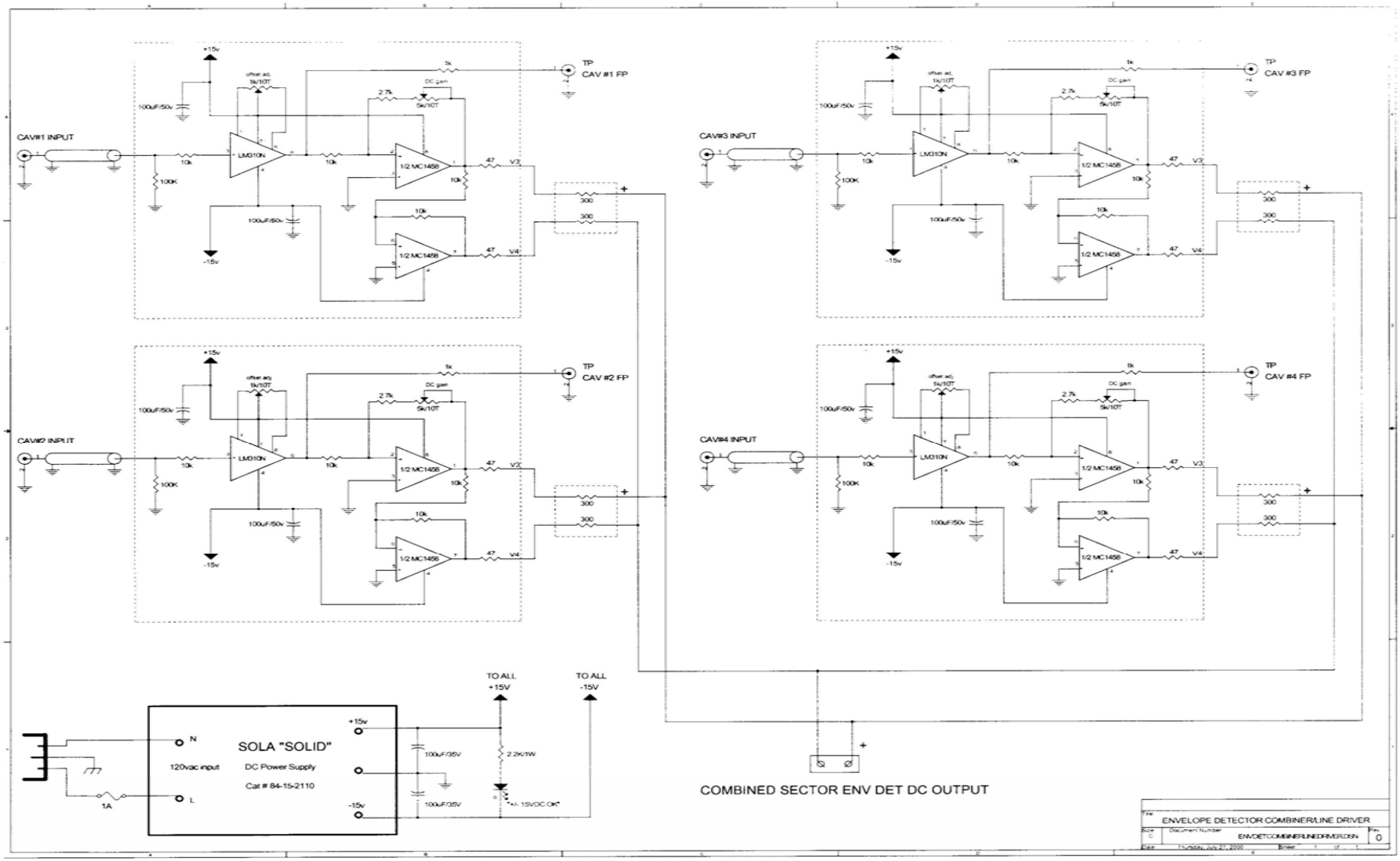

AGC Cavity Sector Power DC Combiner

- Inputs the balanced dc envelope detector signals from all four sectors.

- Sums the sector signals into to sector-pair signals:
  - → *S36+S37*
  - → *S38+S40*

- Converts the sector-pair signals to single-ended unbalanced configuration to drive the feedback card inputs.

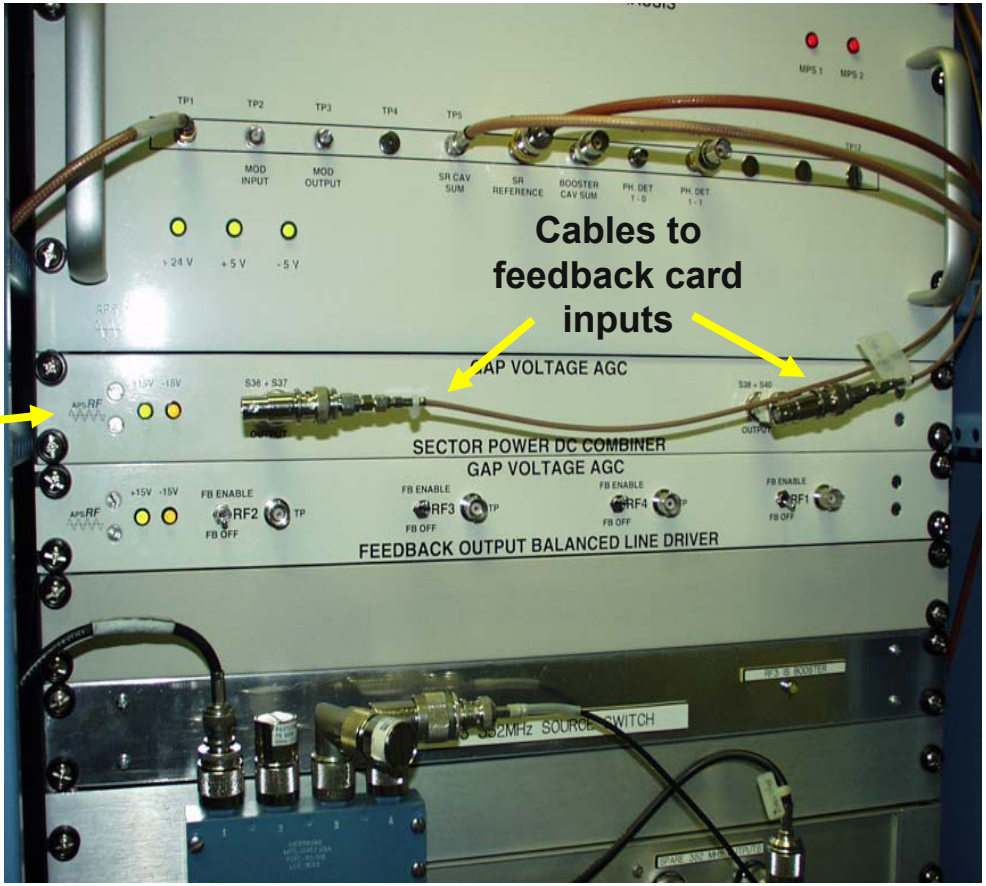

AGC Cavity Sector Power DC Combiner

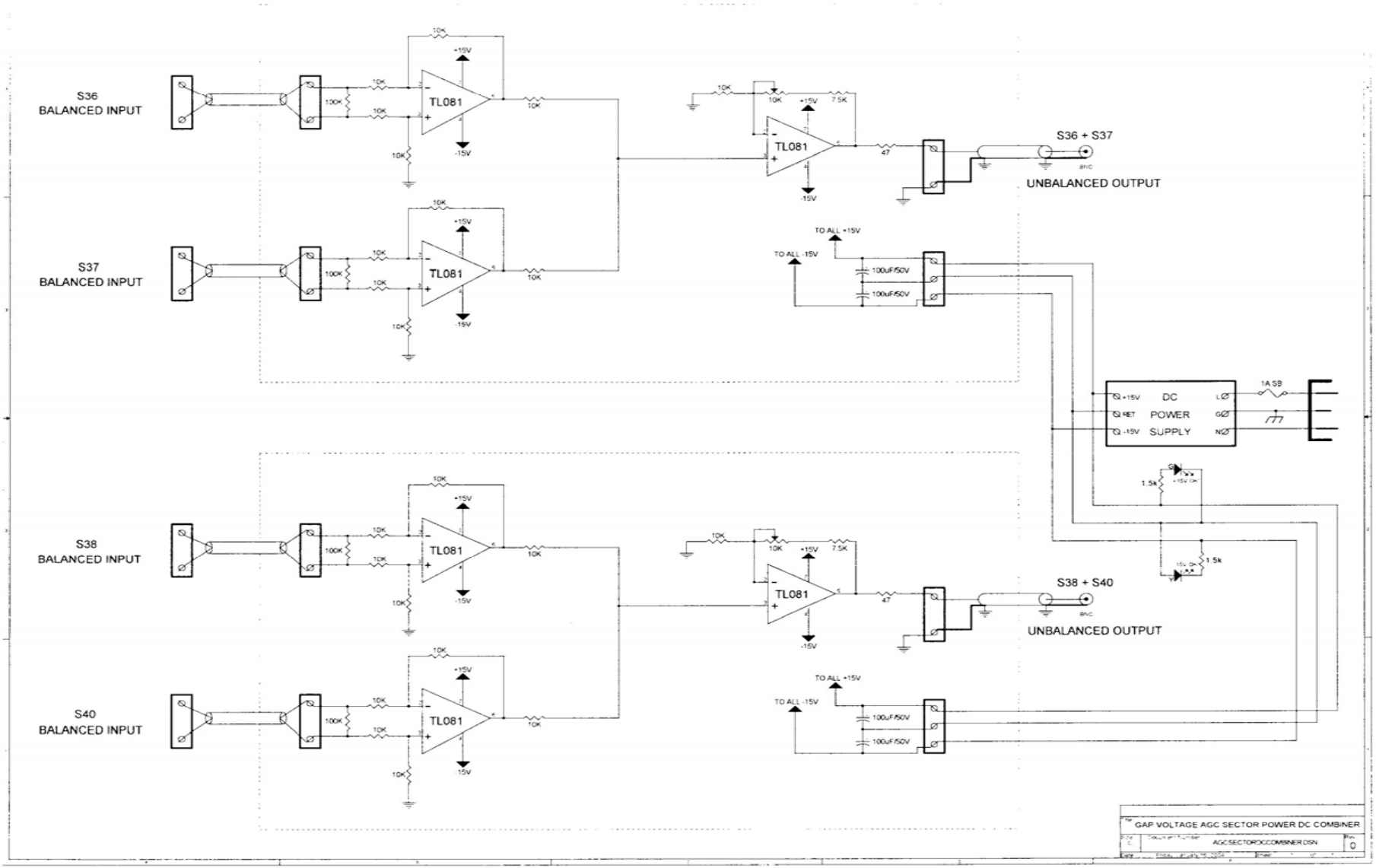

AGC Feedback Output Balanced Line Driver

- Inputs the unbalanced bipolar dc feedback card output signals and converts them to balanced signals for distribution to RF1-RF4.

- Provides front-panel manual switches to enable the feedback signal at each rf station.

- Provides front-panel isolated test points to monitor the feedback signal sent to each rf station.

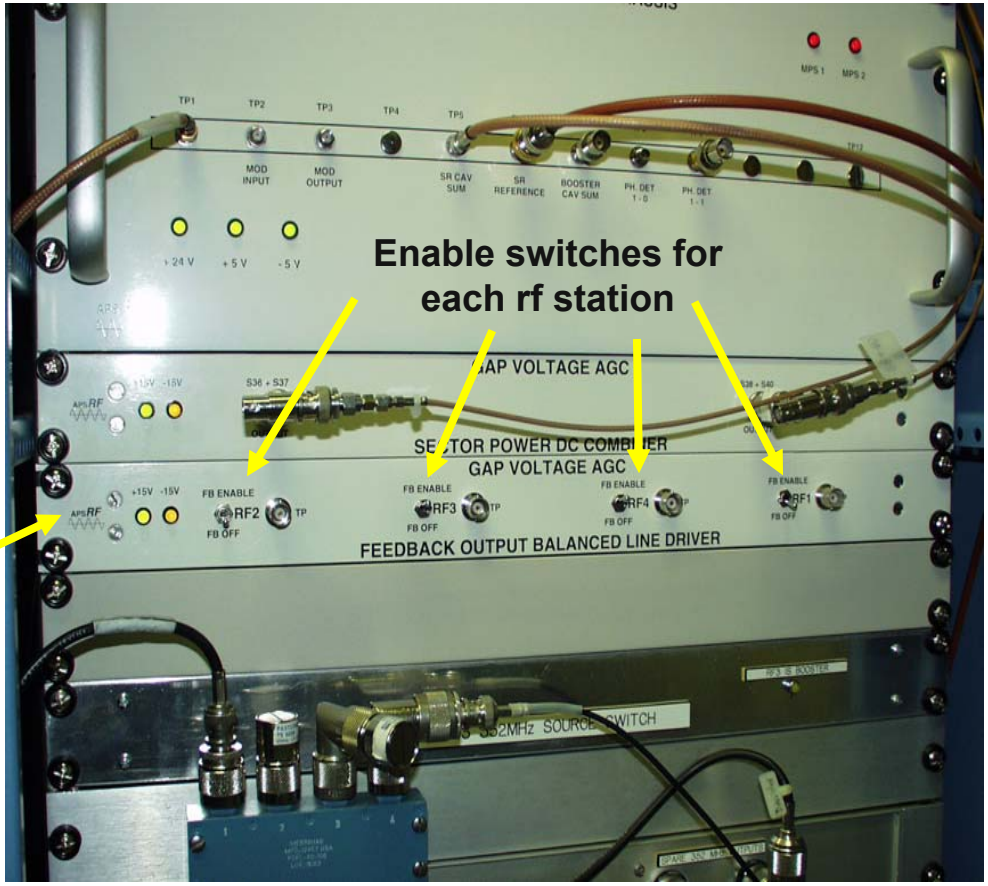

AGC Feedback Output Balanced Line Driver

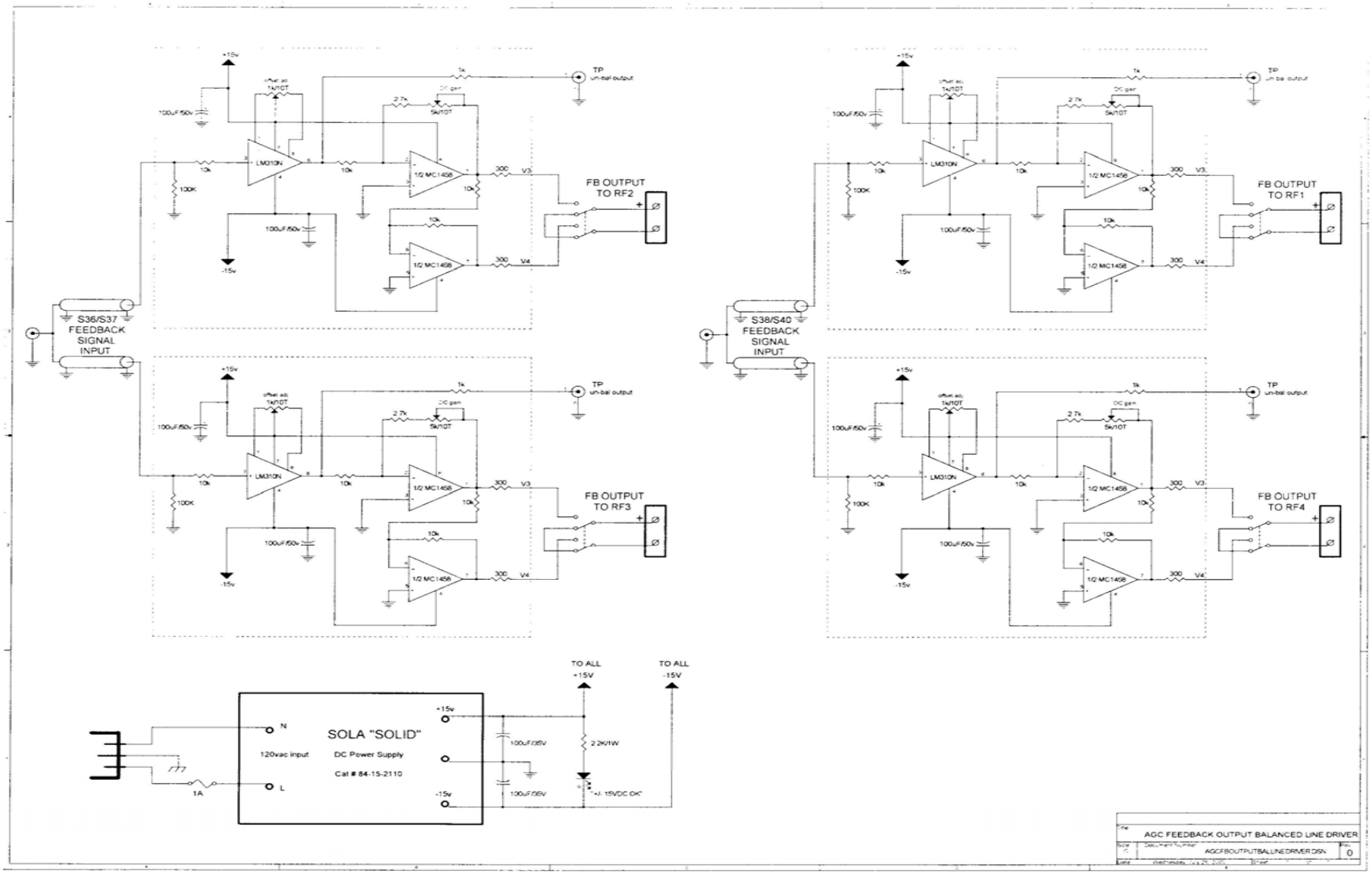

AGC "Voodoo Card" Mod-Anode Interface

- Located on the mod-anode control cabinet door.
- Inputs the unbalanced bipolar dc AGC feedback card output signal and uses it to modulate the klystron mod-anode voltage.
- Utilizes an analog multiplier to modulate the manual mod-anode voltage setpoint voltage coming from the UVC control computer.
- Provides remote feedback on-off control from the AGC feedback logic control unit.

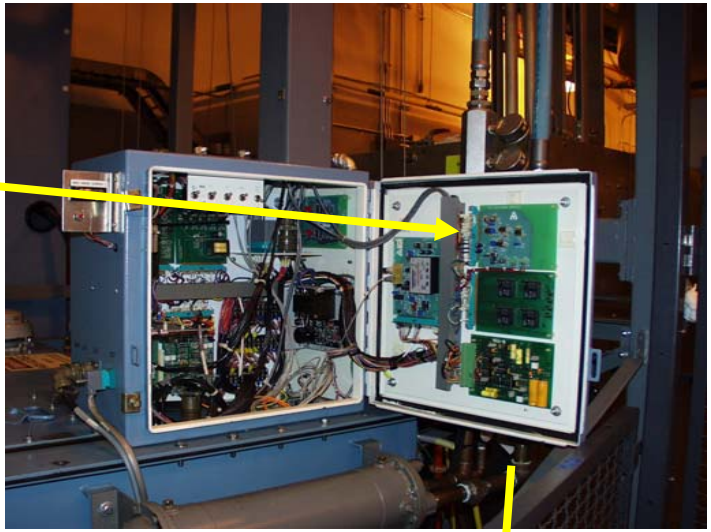

AGC "Voodoo Card" Mod-Anode Interface

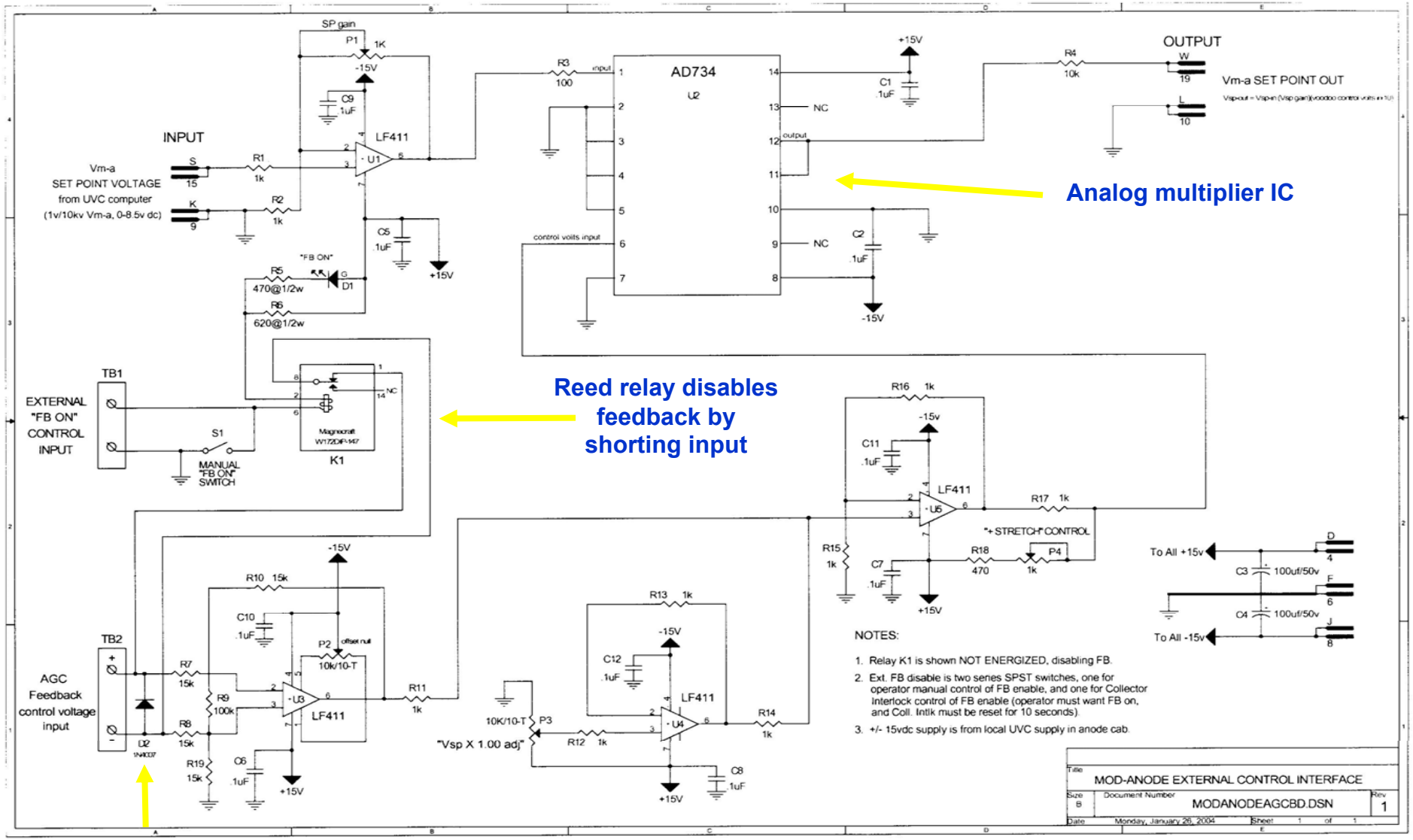

Diode prevents negative feedback input

AGC Logic Control Unit

- Provides critical interlock functions necessary for ***safe*** operation of the AGC system:

  → ***operator command to engage AGC***

  → ***sufficient rf drive to the klystron***

  → ***at least 7 cavities tuned in each sector pair***

  → ***collector interlock reset***

  → ***waveguide switch mode correct?***

- Provides local control and status indicators to aid troubleshooting.

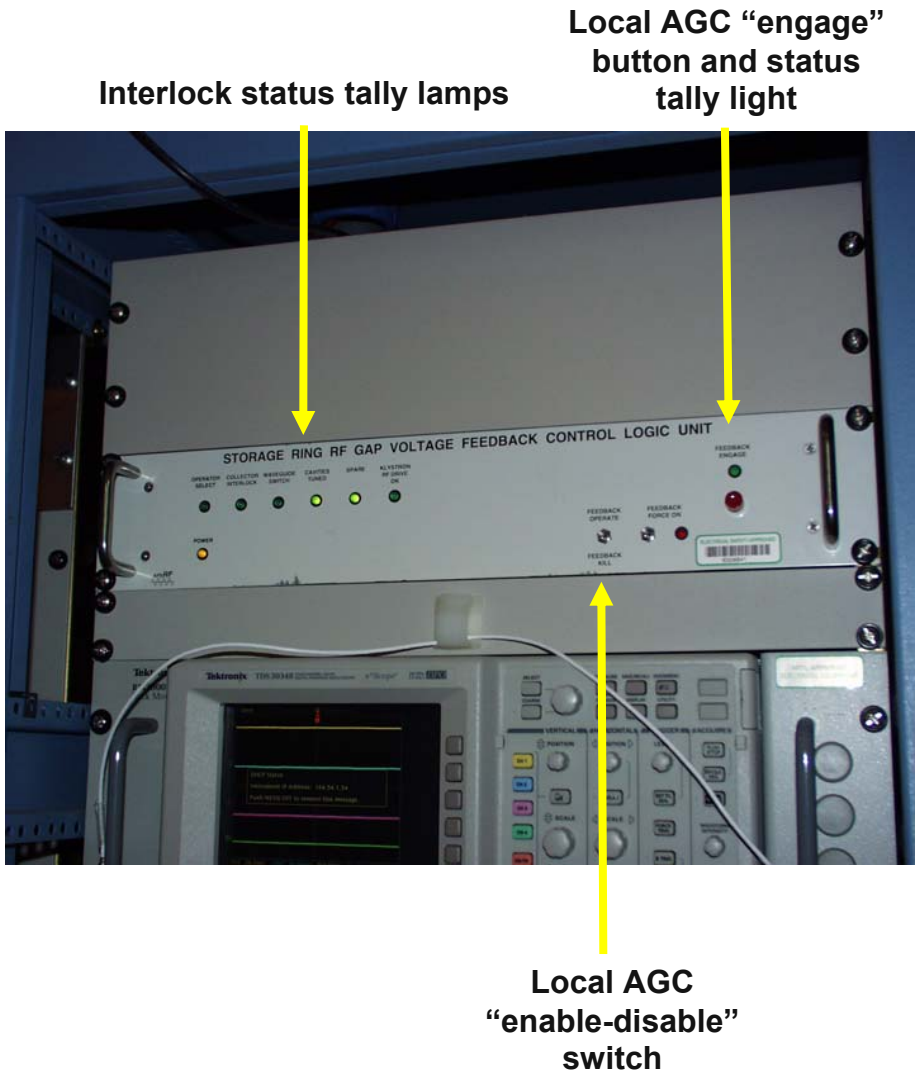

AGC Control Logic Connection to EPICS

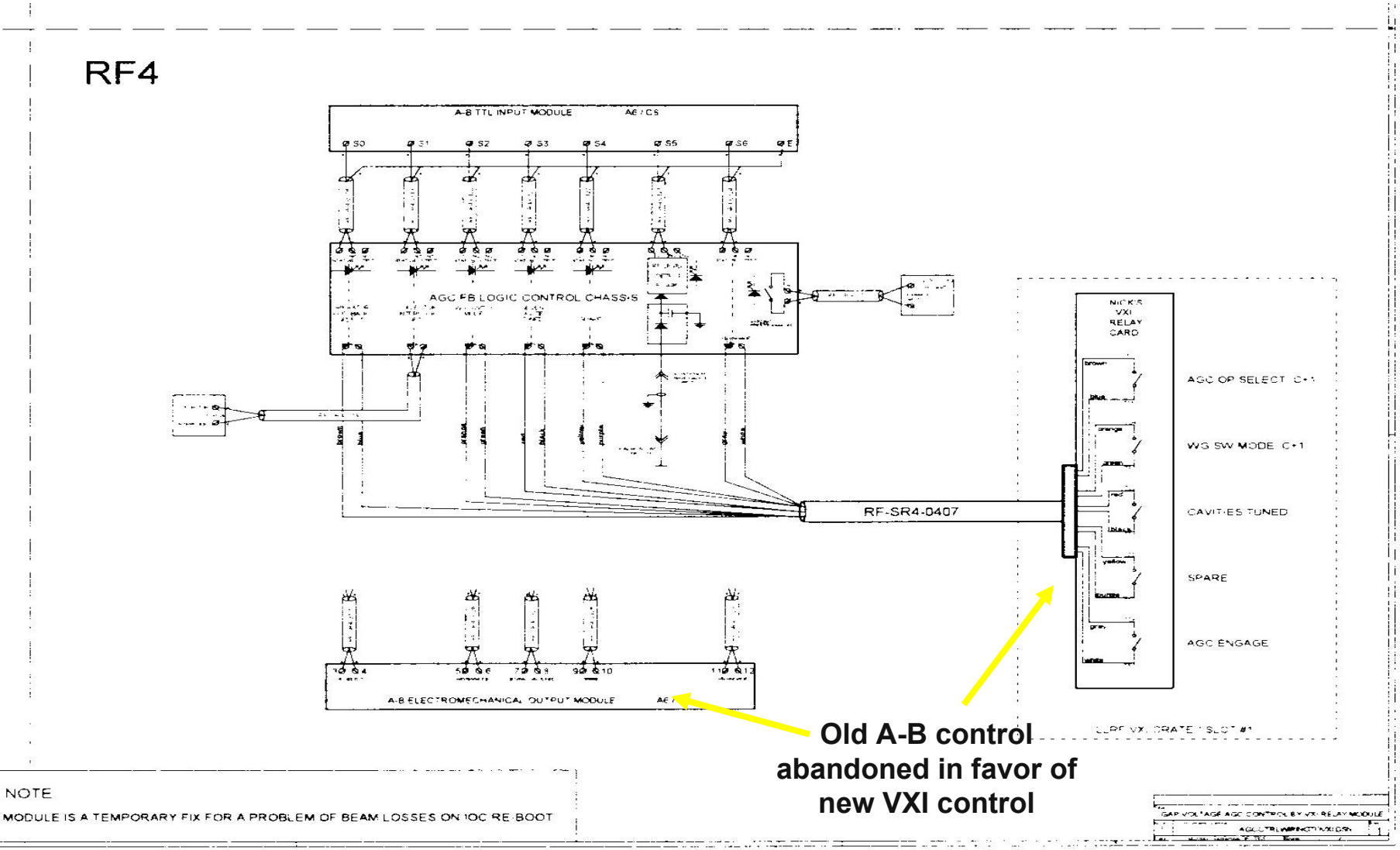

Old A-B control abandoned in favor of new VXI control

AGC Logic Control Unit

Interlock inputs

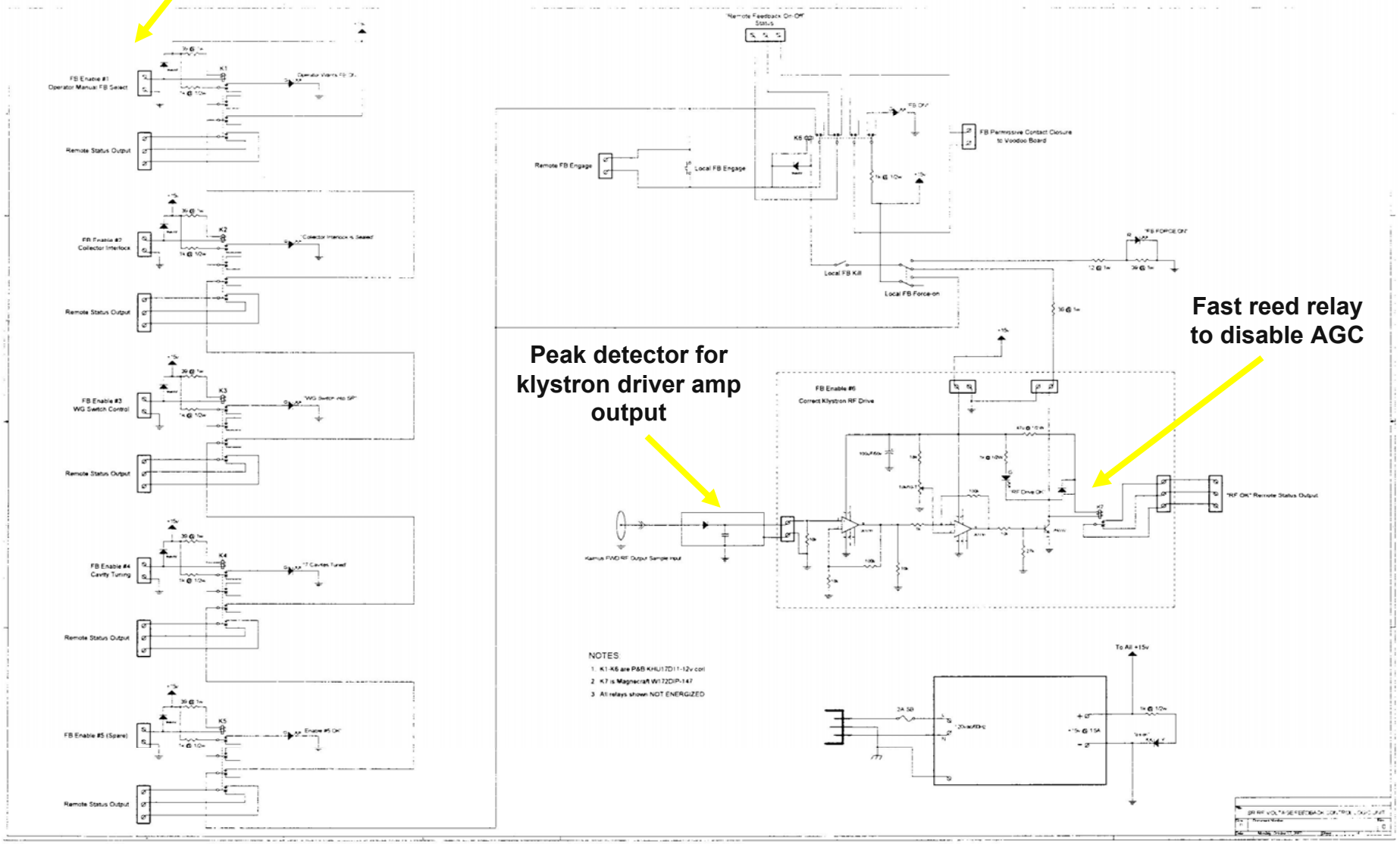

Peak detector for klystron driver amp output

Fast reed relay to disable AGC

Troubleshooting the Gap Voltage AGC System

- **The AGC system design simplifies troubleshooting:**

  → a dc meter is all that is needed to find most problems

  → a scope may be useful in detecting loop instabilities or noise problems

BUT BE CAREFUL:

- ***The AGC system can seriously overpower the cavities if there is a problem!***

- ***Be aware of balanced line signals……do not unbalance them by connecting a scope or some other instrument directly! Use test points for monitoring!***

Troubleshooting the Gap Voltage AGC System

1. **AGC loop will not engage.**

   a) **Are all AGC interlocks clear?**

   → *Collector interlock reset?*

   → *Klystron rf drive normal?*
   (check rf level and peak detector at AGC Logic Unit)

   → *Waveguide Switch mode correct?*

   → *At least seven cavities tuned in the sector-pair?*

   b) **Are all EPICS functions normal?**

   → *"Engage" script running?*

   → *Communication with AGC Logic Unit working?*

   c) **Is the "feedback kill" switch on at the Logic Control Unit?**

   d) **Are the "feedback delegate" switches enabled for the rf stations in operation?**

Troubleshooting the Gap Voltage AGC System

2. **AGC loop engages, but shows little control over klystron beam current.**

   a) **Is manual mod-anode voltage setpoint too high?**

      → ***Feedback card output may be going negative and is being clipped by Voodoo card diode!***

   b) **Is AGC setpoint value too low?**

      → ***Again, feedback card output may be going negative and is being clipped by Voodoo card diode!***

Troubleshooting the Gap Voltage AGC System

3. **AGC loop engages, but drives klystron beam current to excessive levels.**
   a) **Is there a sector envelope detector feedback signal missing?**
      → ***Blown fuse or bad power supply in an Envelope Detector Combiner?***
      → ***Cables or wiring disconnected?***
   b) **Are the feedback card PID settings correct?**
   c) **Is the AGC setpoint value correct?**
   d) **Is the klystron rf drive level correct?**
   e) **Is the klystron perveance normal?**

Troubleshooting the Gap Voltage AGC System

- **The AGC Control Screen yields important clues:**

Feedback output voltage should be +5V to +6V with 102mA stored
→ Adjust UVC mod-anode setpoint!

Cavities tuned?

Interlocks cleared?

Is gap voltage value correct?
→ Each sector-pair is ½ of total gap voltage!

"Engaged" button lit?

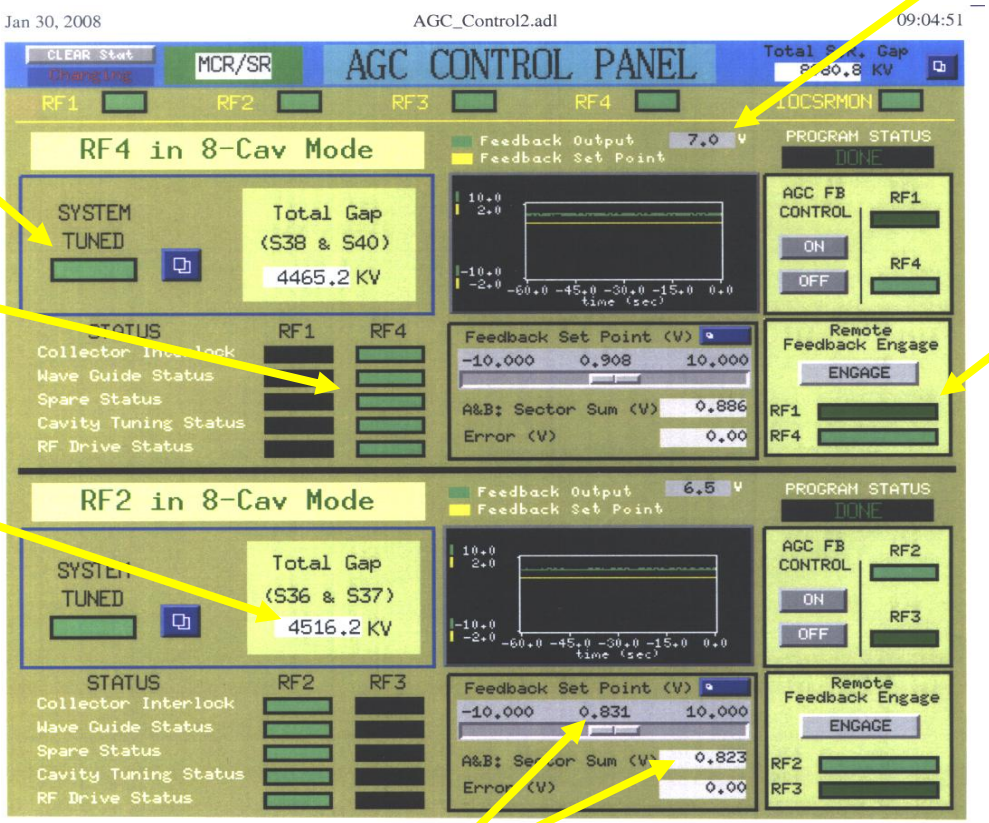

Are setpoint and readback within ~ 50mV?