APS Beam Stability Improvements and Plans

Glenn Decker
Advanced Photon Source
Diagnostics
April 13, 2010

APS Beam Stability Overview

- Present beam stabilization systems and performance
- Beam stability goals
- APS upgrade activities
  - Front-end hard x-ray beam position monitor developments
  - Broadband RF BPM data acquisition system upgrade
  - Real-time feedback system upgrade
  - Tunnel temperature issues / solutions

APS Beam Stabilization Systems

- 160 narrowband rf bpms @ ID source points (Bergoz)
- 280 broadband rf bpms (AM-PM, 10 MHz BW)
- 42 bending magnet photon bpms (tungsten photoemission, vertical)
- 62 ID photon bpms (gold-coated diamond photoemission)
- 279 combined-function H+V steering correctors (slow)
- 38 fast steering correctors
- 1.5 kHz sample rate AC real-time feedback system (c. 1997)
  - Up to 168 bpms x 38 correctors
  - 0.1 – 100 Hz closed-loop bandwidth
- 10 Hz DC orbit correction with AC/DC overlap compensation
  - All bpms and correctors available, typical matrix size is hundreds of bpms x 80 correctors
  - Local beamline steering on request

Beam Stability Performance Goals

- Typical goals for the APS Upgrade are

		AC Motion* (0.1-200 Hz)		Long term (1 week, pk-pk)	
Horizontal	Now	5.0 μm	0.85 μrad	7.0 μm	1.4 μrad
	Upgrade	3.0 μm	0.53 μrad	5.0 μm	1.0 μrad
Vertical	Now	1.6 μm	0.80 μrad	5.0 μm	2.5 μrad
	Upgrade	0.42 μm	0.22 μrad	1.0 μm	0.5 μrad

APS Front-end hard x-ray beam position monitor development

- Extensive studies have taken place at the APS investigating copper x-ray fluorescence vs. photo-emission for photon beam position monitoring.
  - Photo-emission-based bpms have residual 10-20 micron residual systematic errors.
  - With X-ray fluorescence, soft bending magnet radiation background is essentially eliminated.
  - High power densities remain a challenge.

- An in-air prototype of an x-ray fluorescence-based hard x-ray bpm has been installed at APS diagnostics beamline 35-ID and is undergoing extensive testing.

Photoemission Photon Beam Position Monitor Blade Signals vs. ID gap

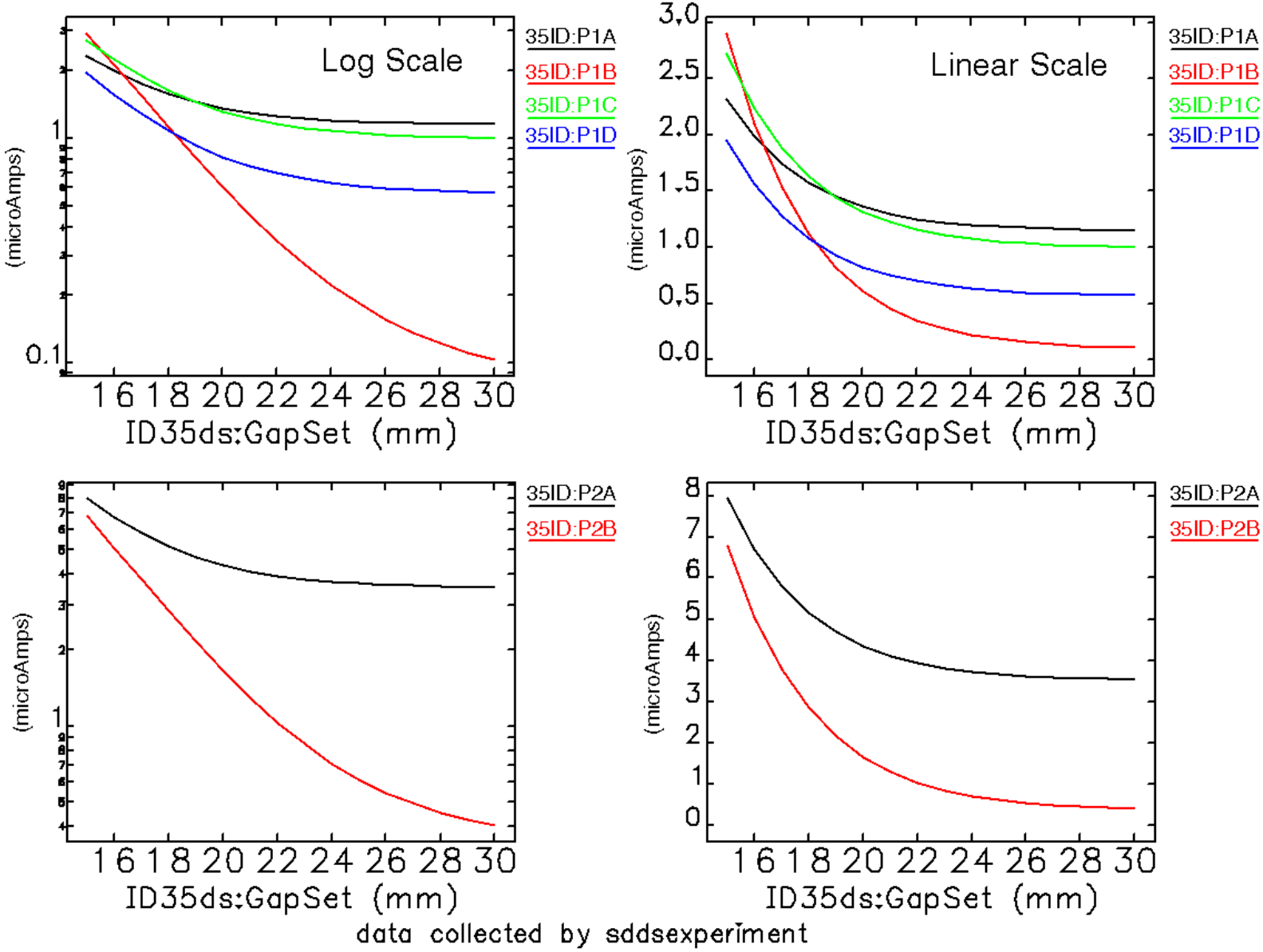

Grazing-incidence Hard X-ray Fluorescence-Based Insertion Device X-ray Beam Position Monitor Conceptual Design (GRID-XBPM)

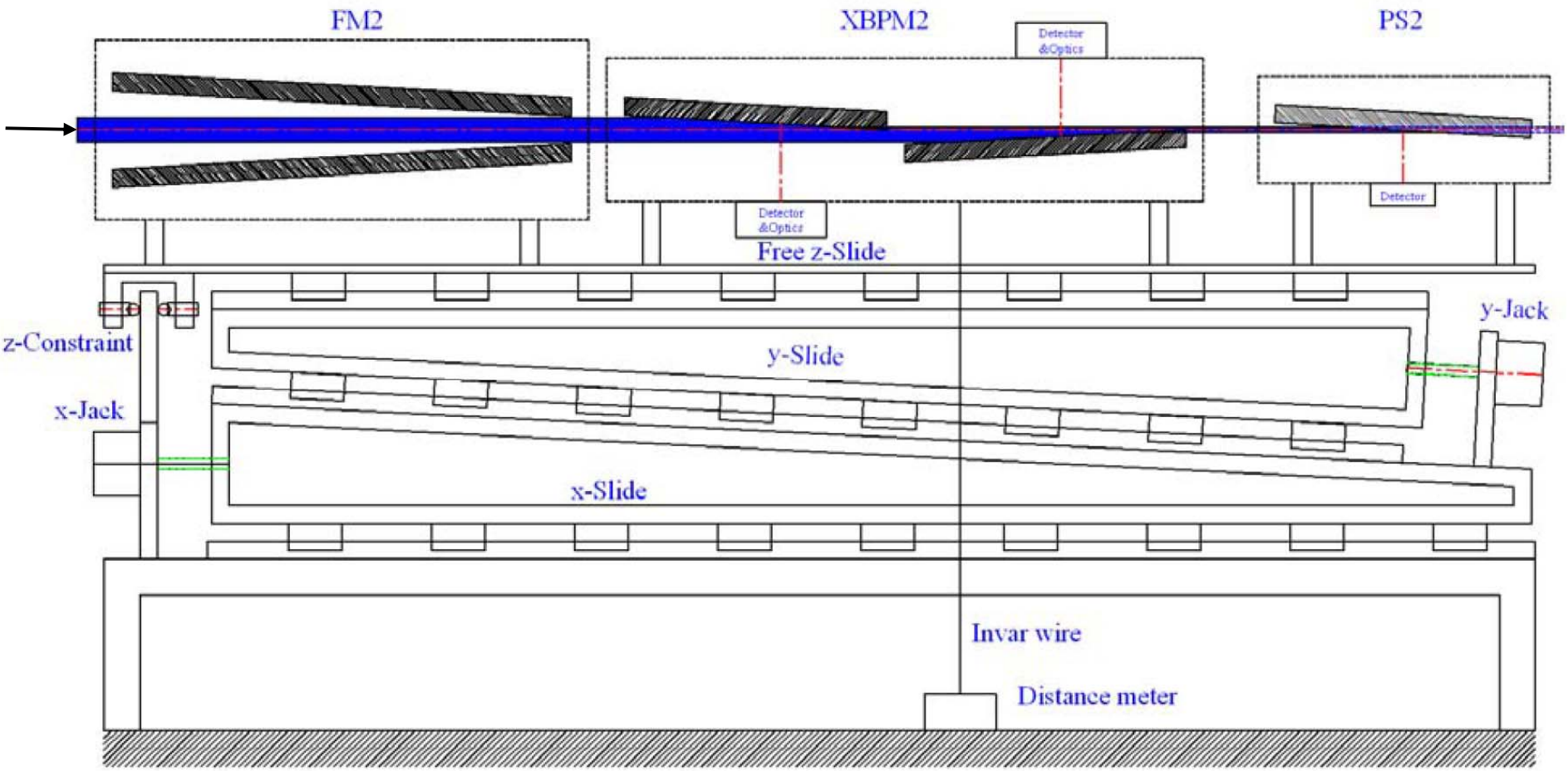

Concept courtesy of Bingxin Yang

Power Density Profiles @ 30 m, APS Undulator A, 100 mA

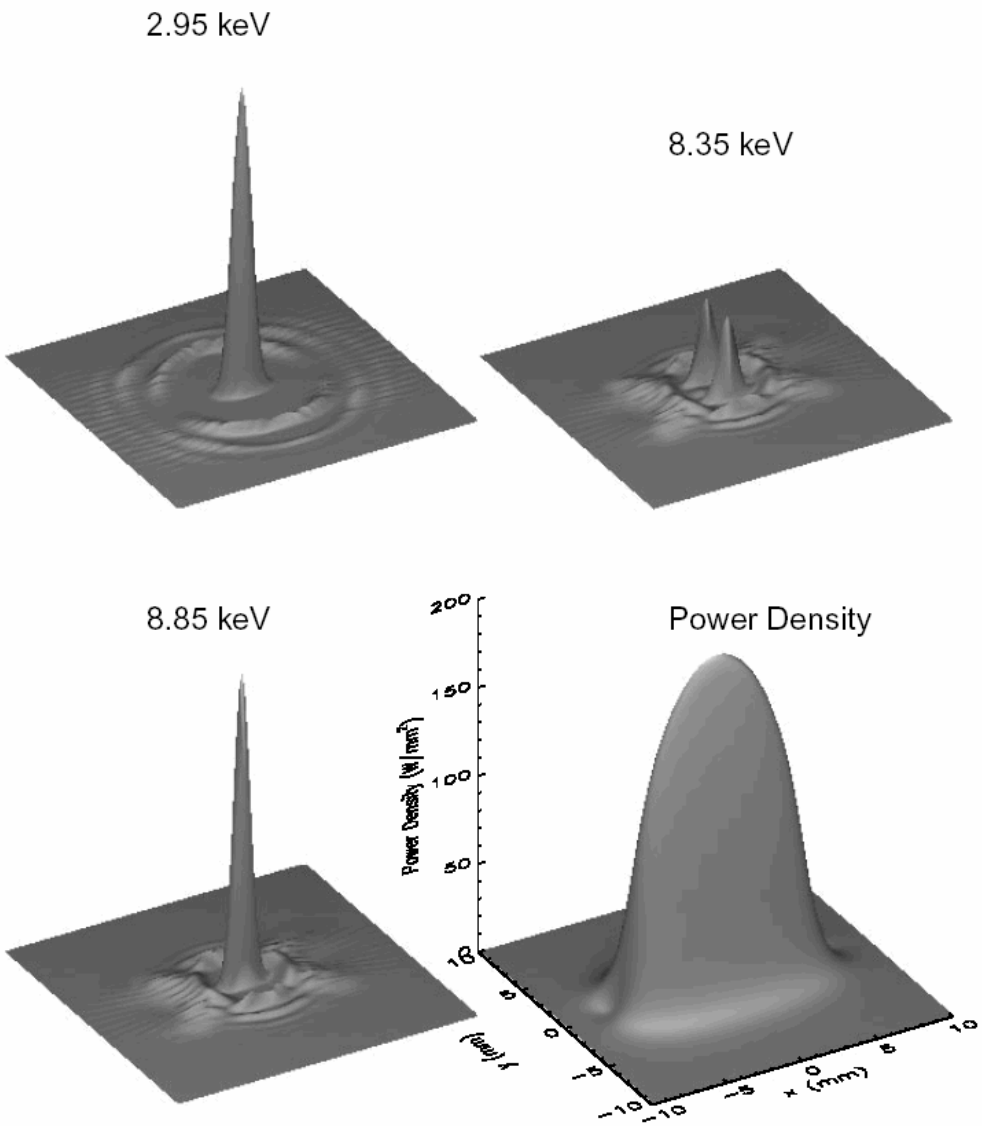

Courtesy of Roger Dejus

Prototype In-air GRID-XBPM @ 35-ID

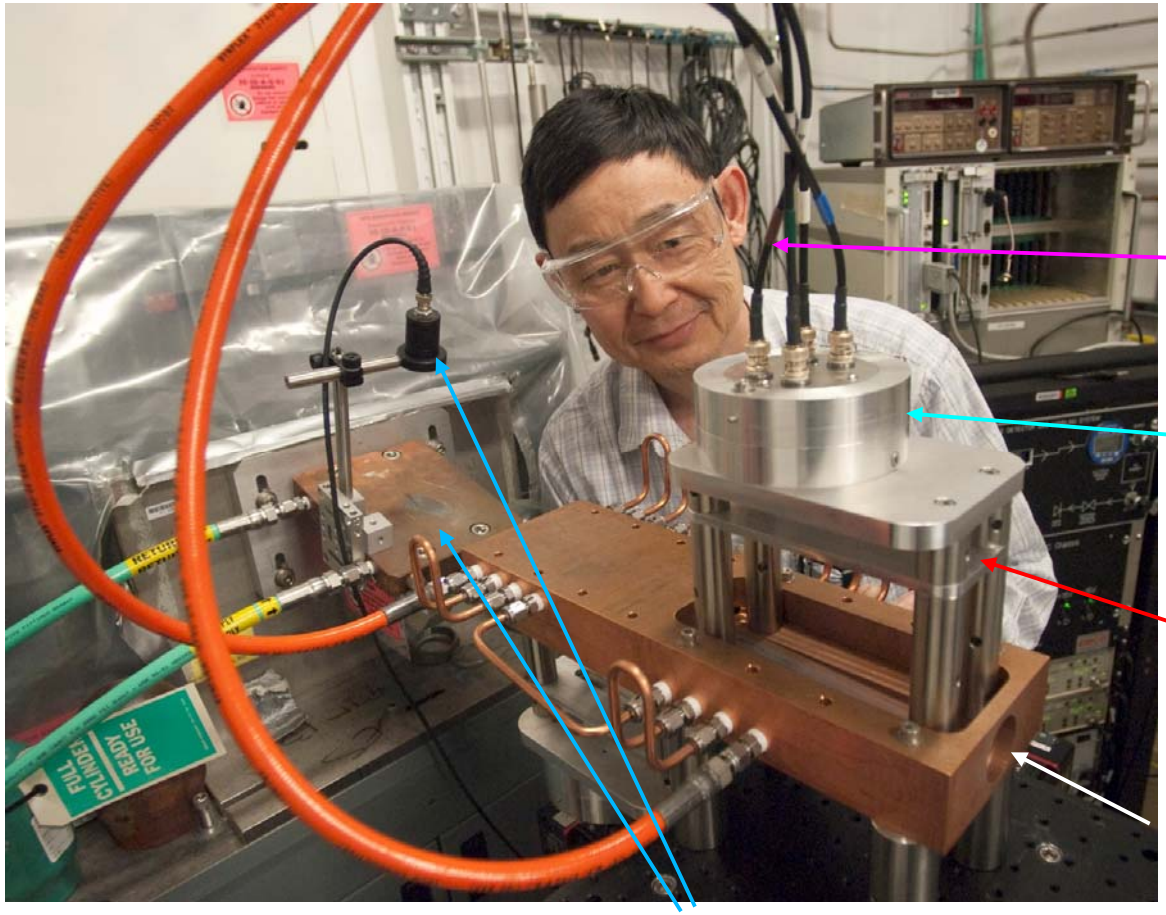

Bingxin Yang

Four Pin diodes
(Two sets, top and
bottom)

Pinhole "camera"
apertures

X-rays

Beam stop (PS2 surrogate)
With pin diode monitoring
X-ray transmission.

Hard X-ray Fluorescence Beam Position Monitor Photodiode Signals

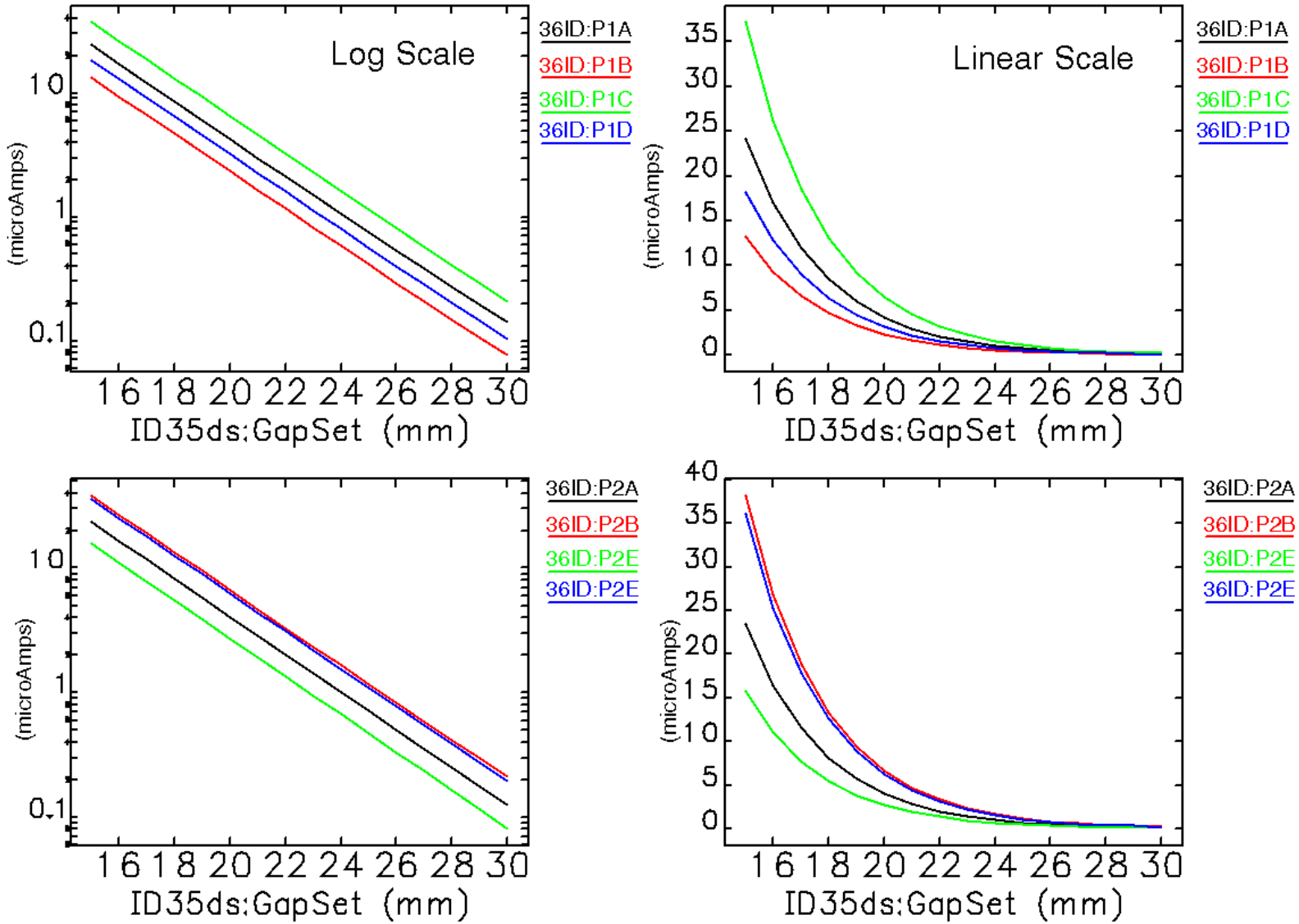

data collected by sddsexperiment

Hard X-ray BPM Signal Variation with Vertical Position

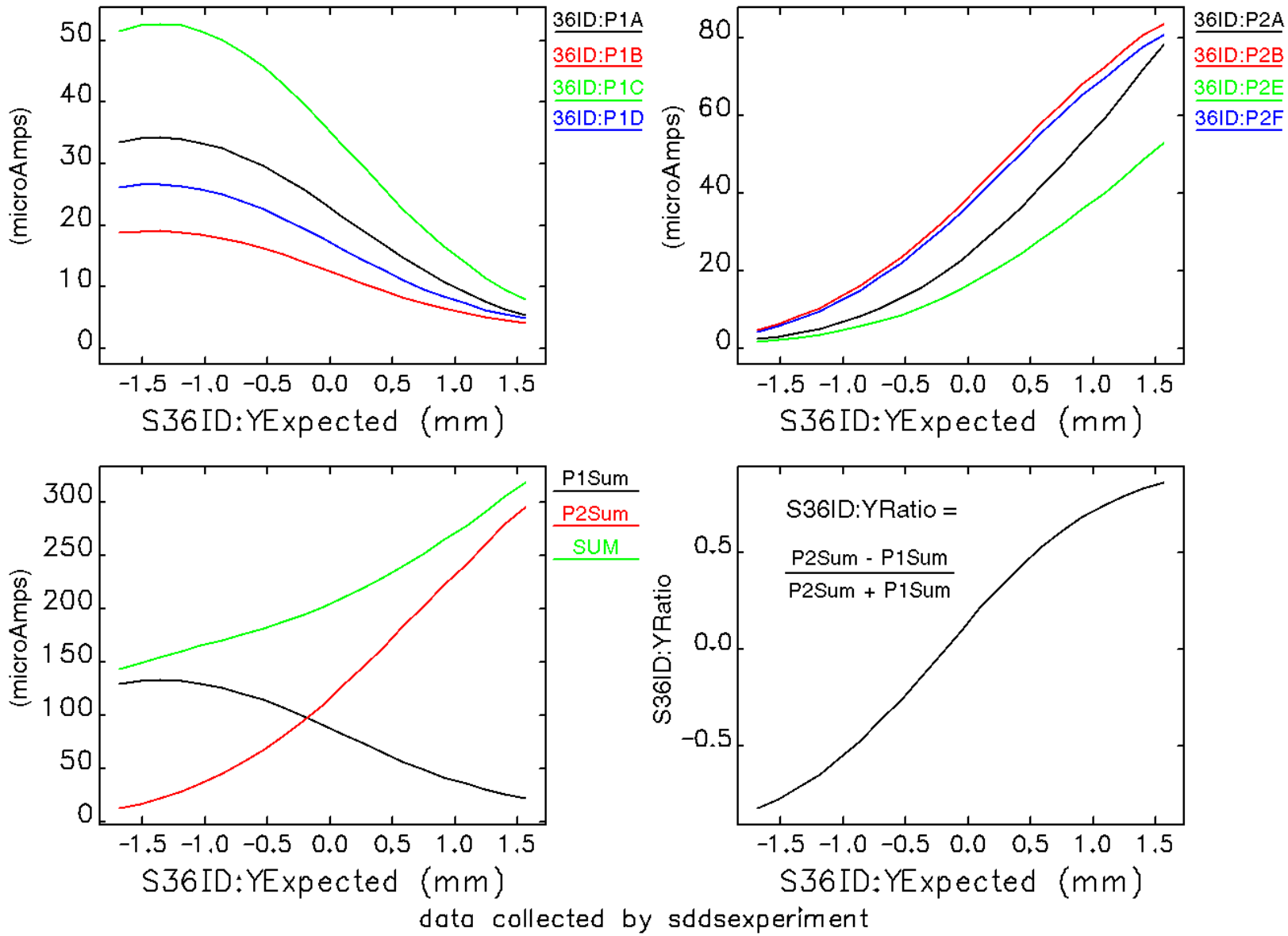

GRID-XBPM Assembly Drawing

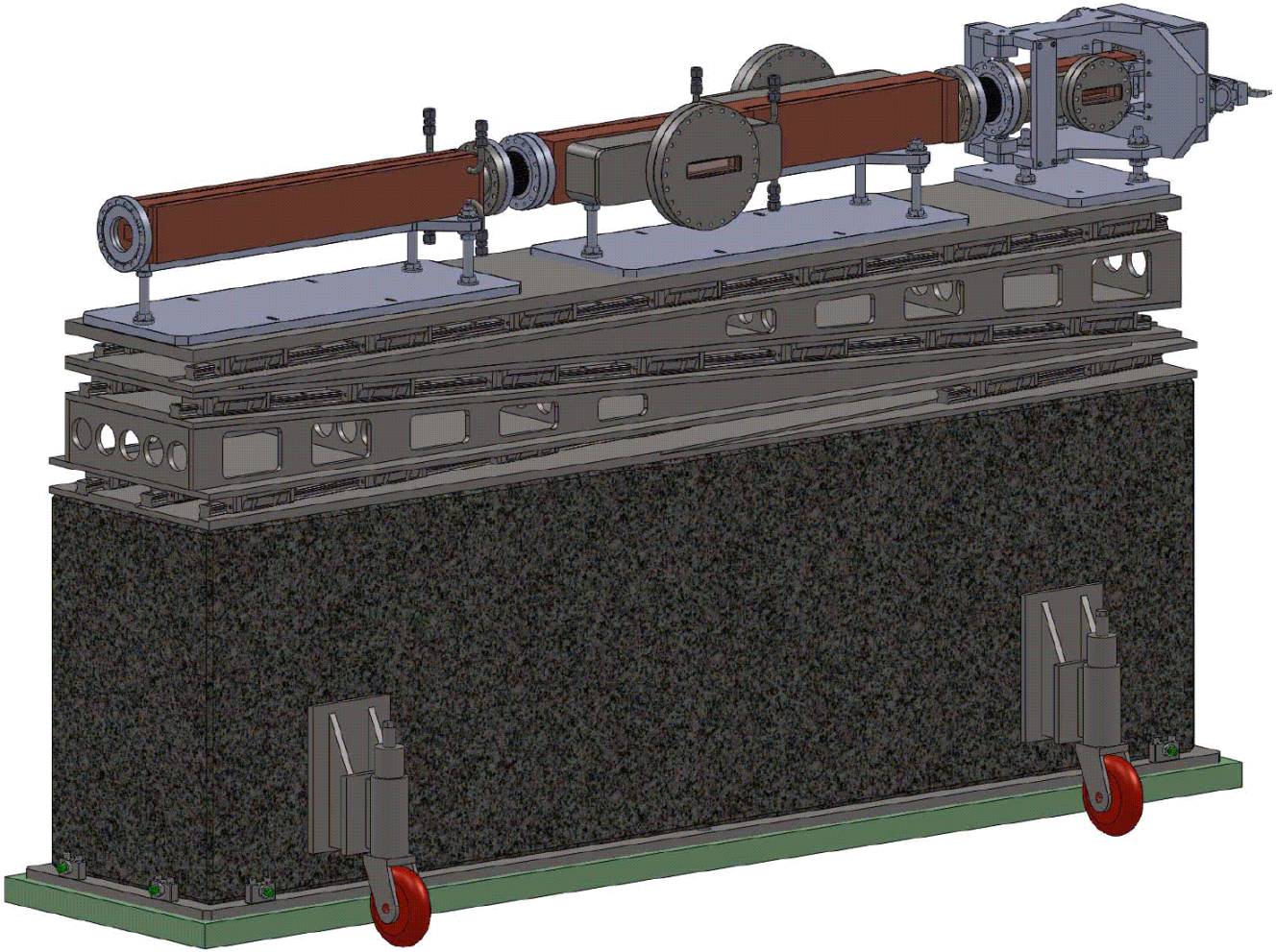

Conceptual Design of the first article GRIDXBPM

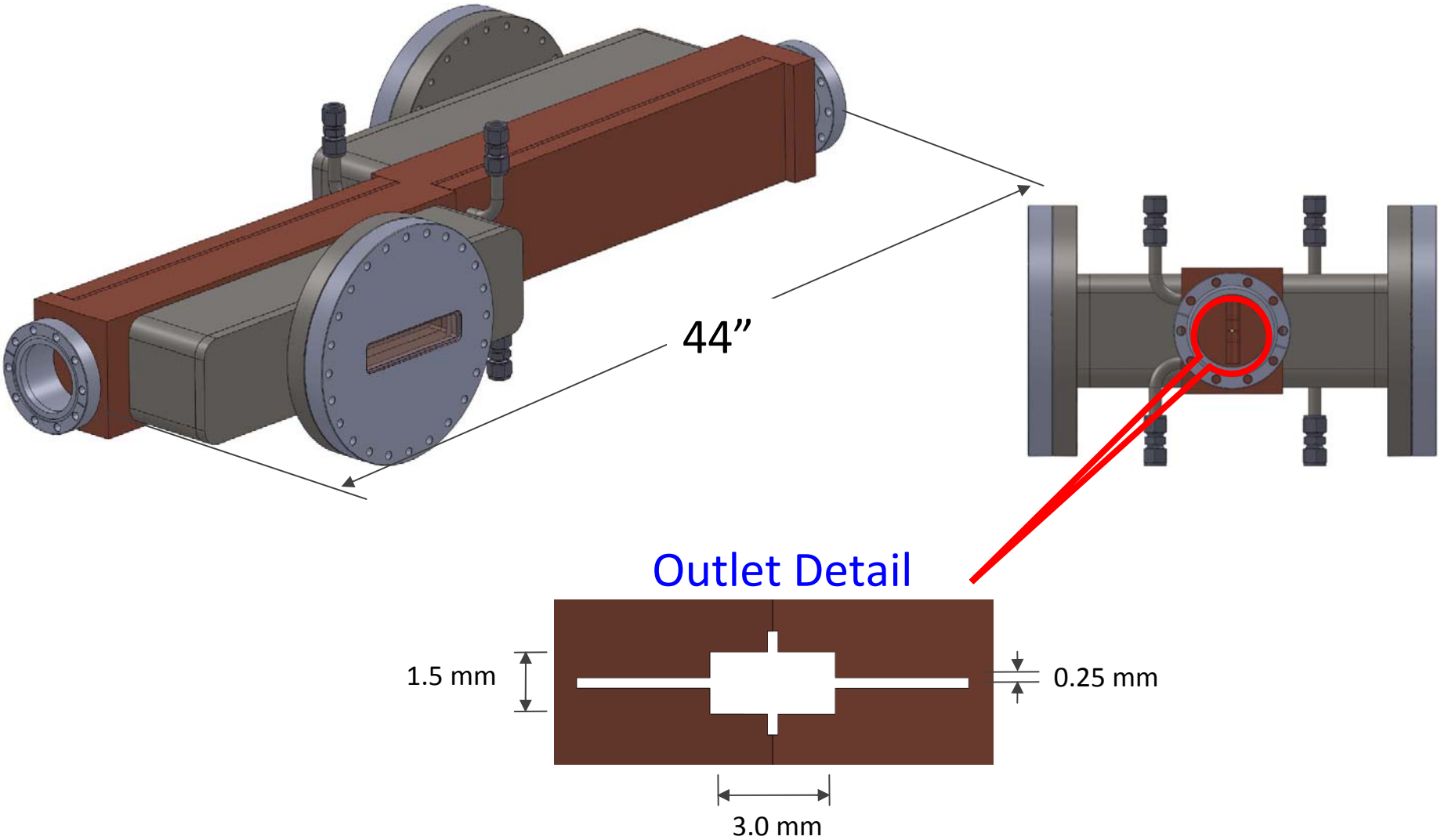

Courtesy of Soon-Hong Lee, AES-MED

Simulation Result (Preliminary) - Vertical

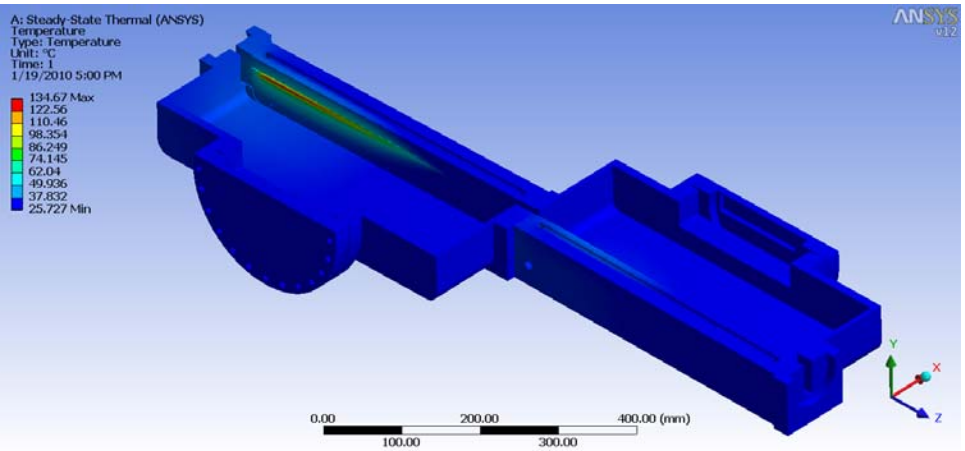

Temperature Distribution @ Case 4 (Max. 134.7 °C)

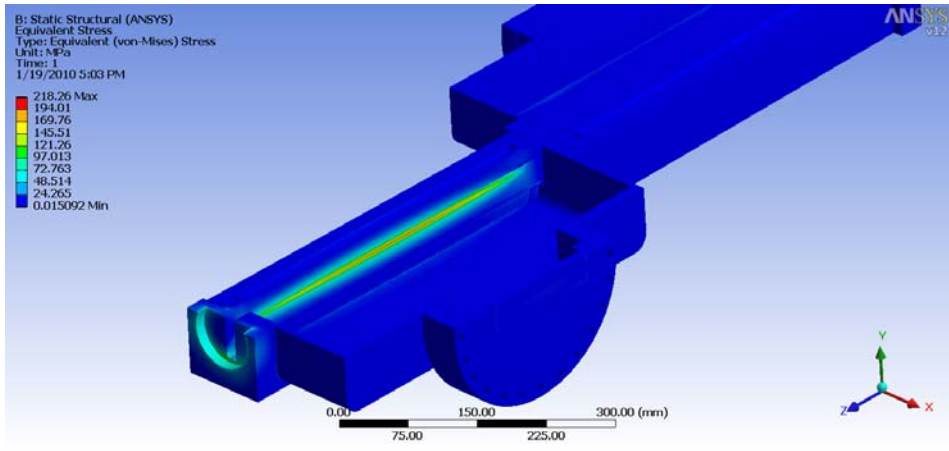

Stress Distribution @ Case 3 (Max. 218.3 MPa)

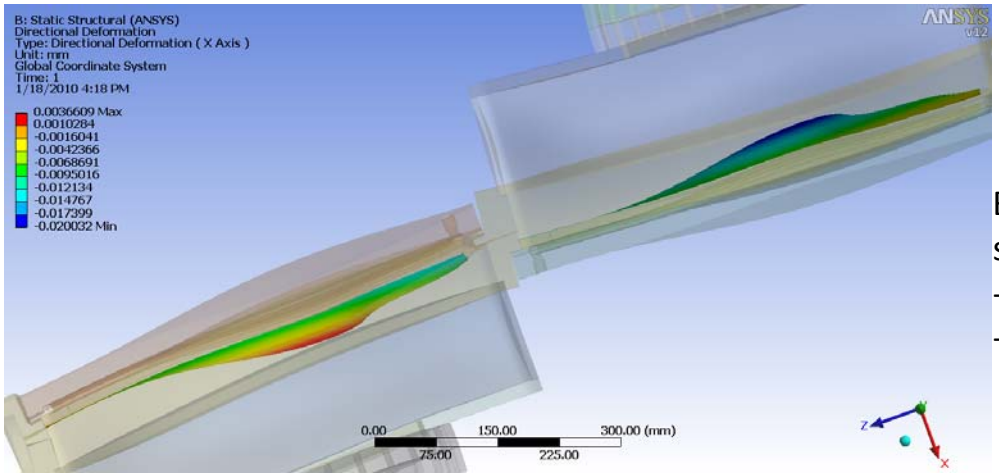

Beam stability specification (<200Hz)
- Vertical : 0.3 µm rms
- Horizontal: 3.0 µm rms

~ 11.3 µm bump

Surface deflection @ Case 1
(Horizontal direction only, 2100x)

Note: 10 kW =
5 m Undulator A
@ 100 mA

Courtesy of Soon-Hong Lee, AES-MED

APS Broadband RF BPM data acquisition upgrade

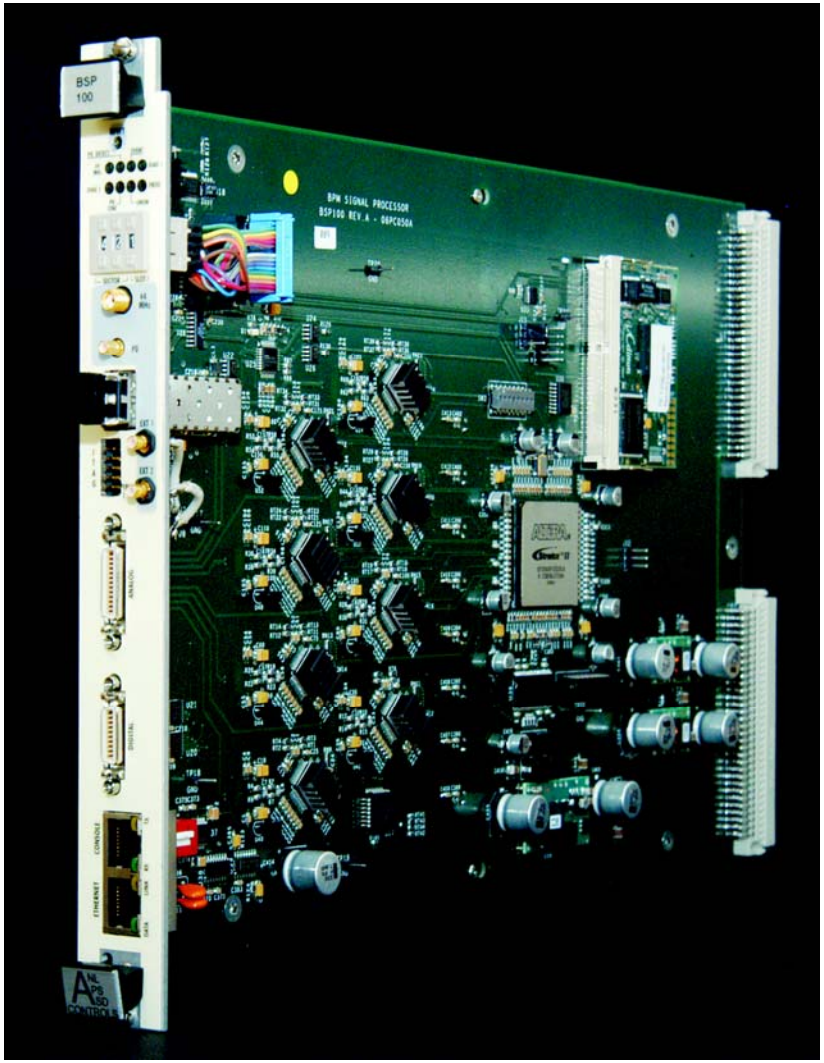

- Eight channels/board, 88 MS/sec sampling. Altera FPGA processing.
- One second (262144 samples) turn-by-turn beam history for machine studies / fault diagnosis.
- Demonstrated noise floor

  < 5 nm / √Hz
- Five sectors instrumented, parts for 3 more sectors in hand, more on the way.

State-of-the-art Commercial Solution

- Noise floor approaching 2 nm / √Hz.
- Long term drift 200 nm p-p / 24 hours*.

* Guenther Rehm, Diamond Light Source, EPAC 2008

BPM Electronics Performance

APS BSP-100 Module

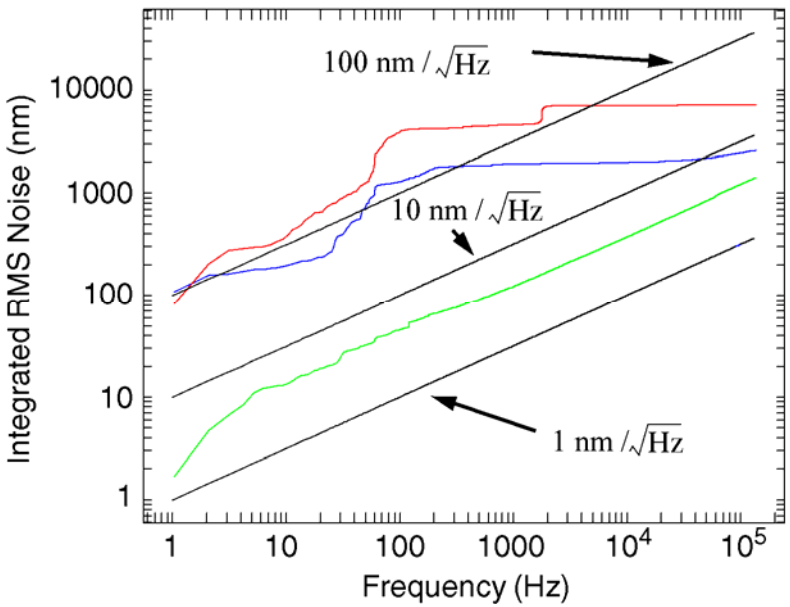

Libera Brilliance@APS

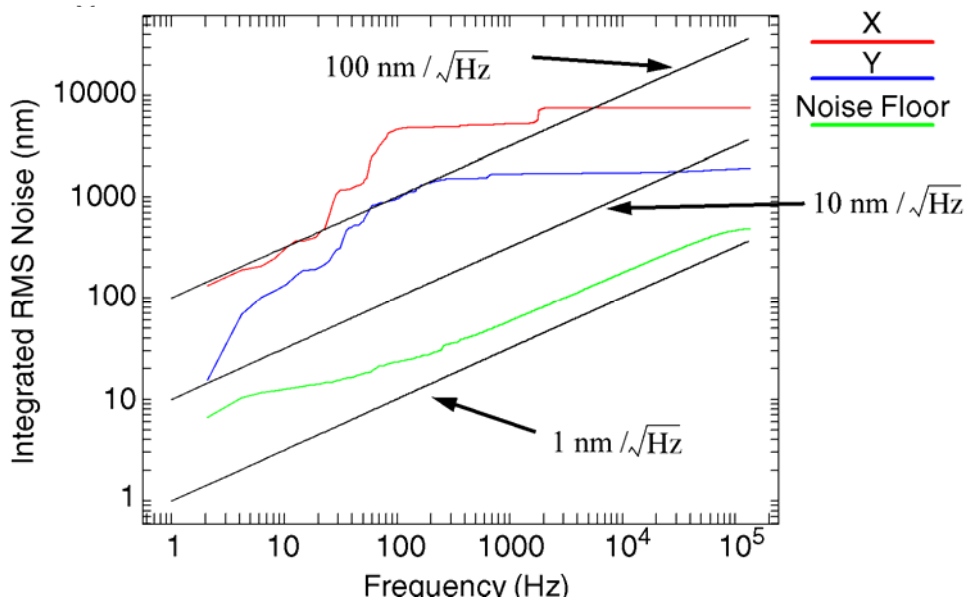

Libera Brilliance / GRID-XBPM Comparison

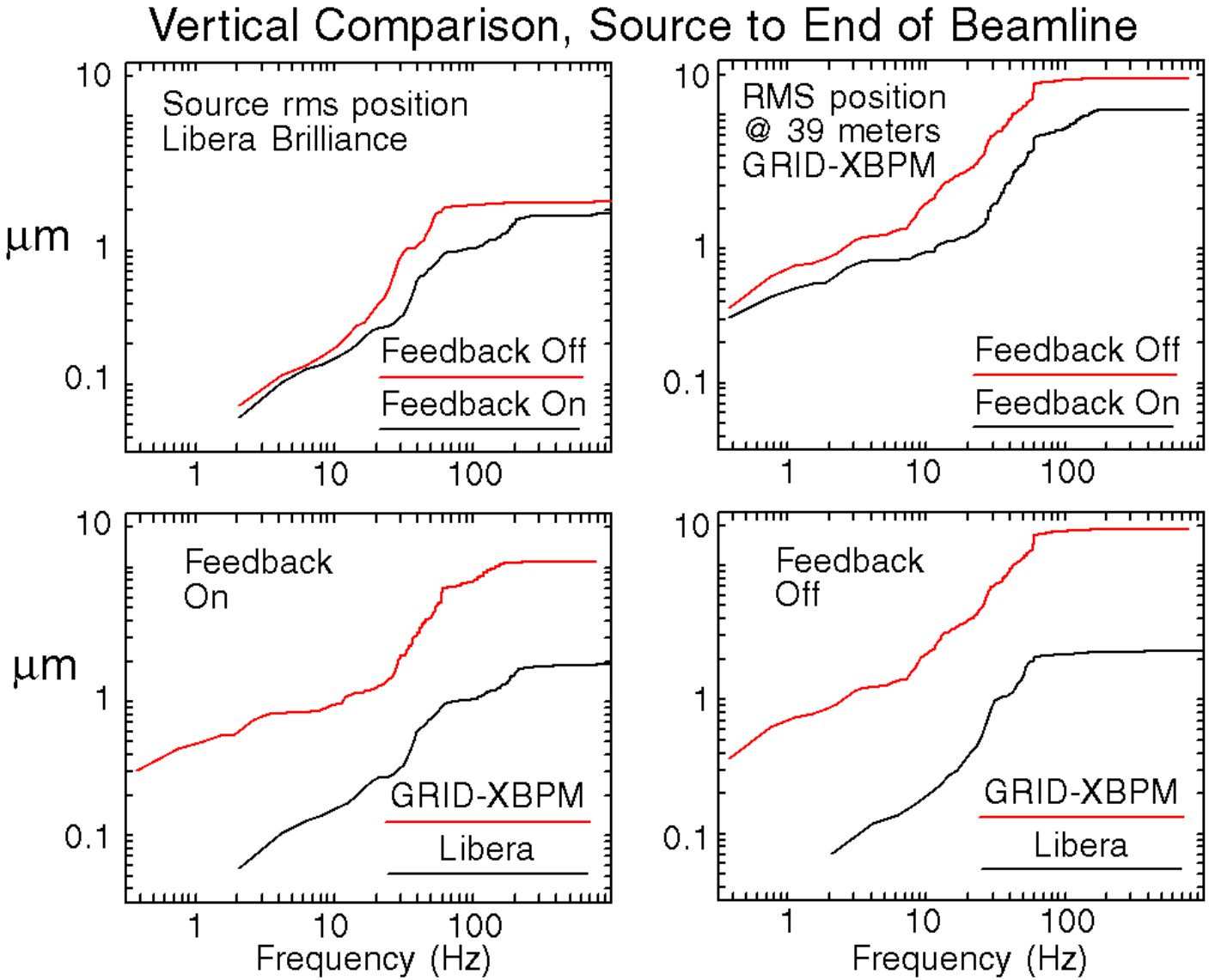

Real-time feedback system upgrade

- Originally commissioned in 1997.
- Limited to 1.5 kHz sample rate => 50 Hz closed-loop bandwidth.
- Modern commercially available hardware should allow closed-loop BW up to 200 Hz or higher.
- Relocation of “B:H4” correctors will double the coverage of fast steering correctors, improving ac stability by factor of 2.

Tunnel temperature issues / solutions

- APS Tunnel Air / Water temperature regulation is pretty good, at the level of 0.3 – 0.5 deg. C p-p for air, and 0.06 deg. C p-p for water. (24 hours)
- Improving this significantly will likely be expensive.
- Two options are
  - develop mechanical sensors to monitor the physical location of critical beam position monitor pickups: A BPMPM (BPM^2), or
  - spend a lot of money building bpm supports out of invar, taking up a lot of space which could be used for longer insertion devices.

Correlation of measured beam position and water temperature

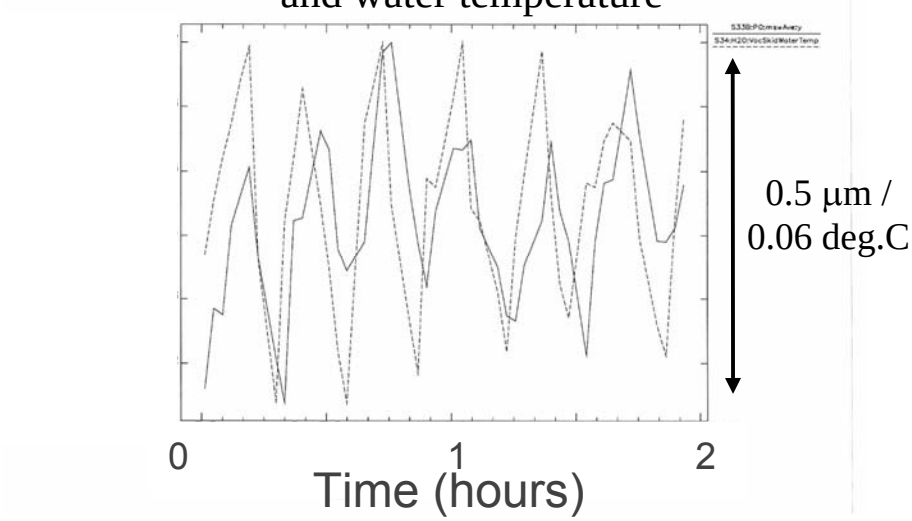

ID Chamber Pickup Electrode

Tunnel Temperature Issues / Solutions

Laser Proximity Sensor

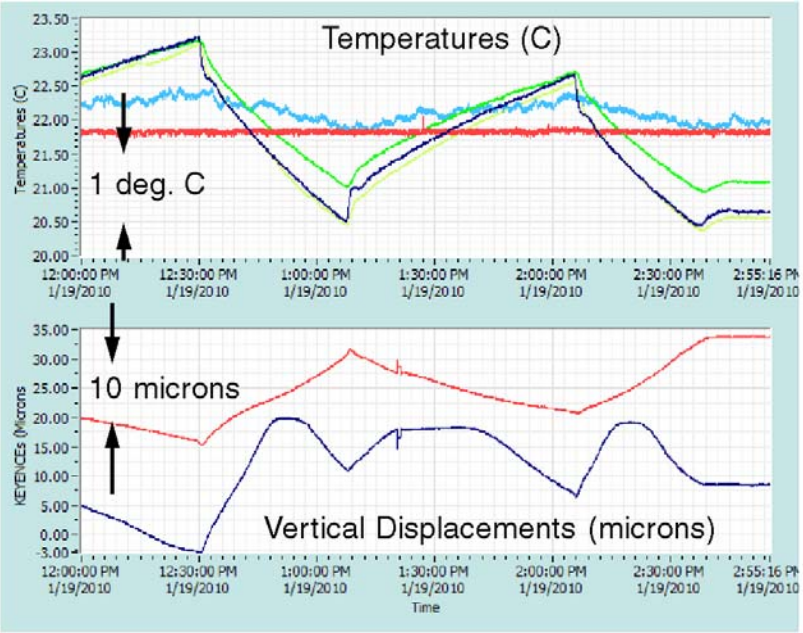

Keyence
Proximity Sensor
50 nm Resolution

* Data courtesy of Bob Lill

Beam Stabilization Summary

- APS beam stability is an important element of the upgrade
- Long-term drift is quite challenging at the sub-micron scale
  - Photon bpm technology is evolving to meet this challenge
  - Means for mitigation of thermal effects and other sources of long-term drift are needed.
  - Beamline instrumentation is ultimately necessary
- Instrumentation supporting AC beam stability is well in hand
  - FPGA technologies allow noise floor approaching 1 nm / √Hz

milliHertz

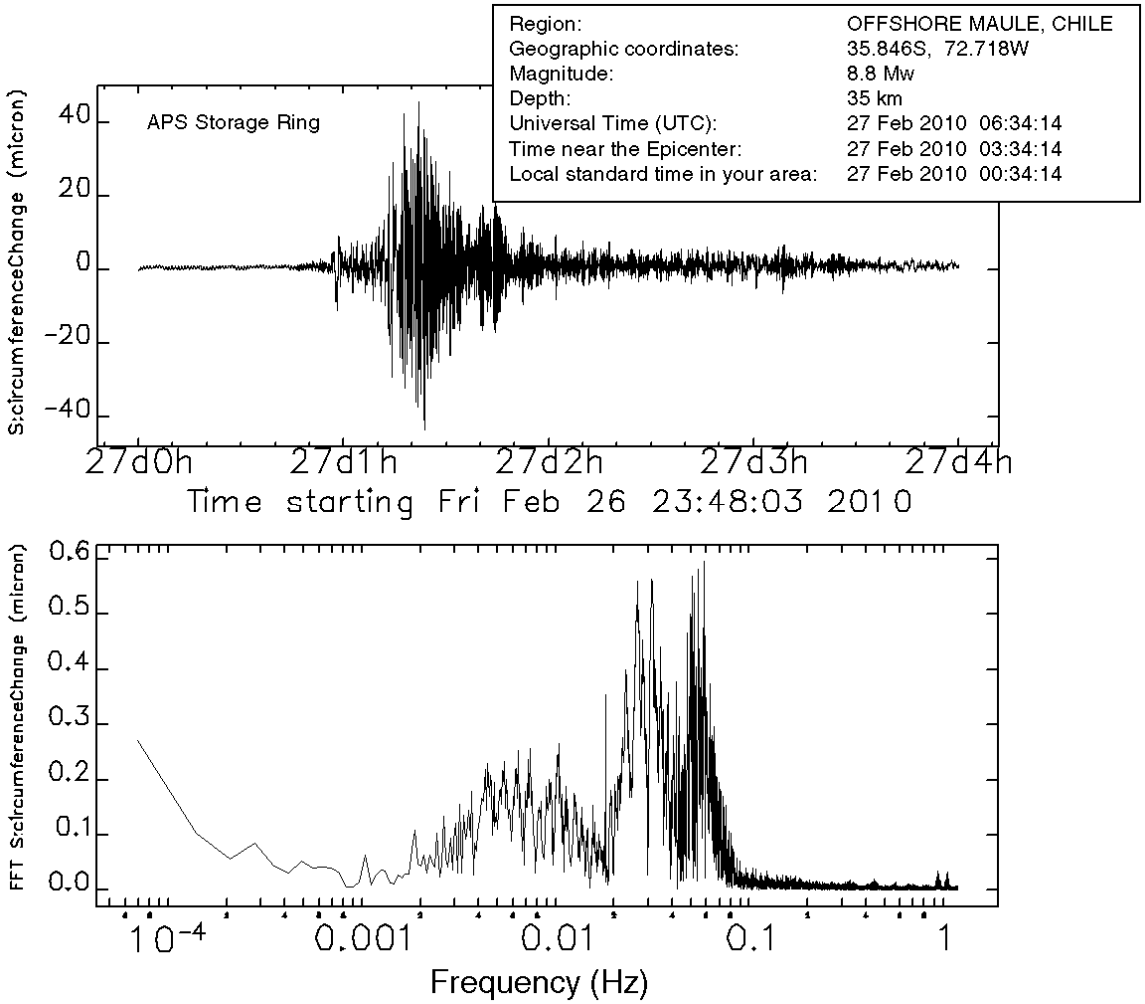
Region: OFFSHORE MAULE, CHILE
Geographic coordinates: 35.846S, 72.718W
Magnitude: 8.8 Mw
Depth: 35 km
Universal Time (UTC): 27 Feb 2010 06:34:14
Time near the Epicenter: 27 Feb 2010 03:34:14
Local standard time in your area: 27 Feb 2010 00:34:14
APS Storage Ring
S:circumferenceChange (micron)
40
20
0
-20
-40
27d0h
27d1h
27d2h
27d3h
27d4h
Time starting Fri Feb 26 23:48:03 2010
FFT S:circumferenceChange (micron)
0.6
0.5
0.4
0.3
0.2
0.1
0.0
10^-4
0.001
0.01
0.1
1
Frequency (Hz)