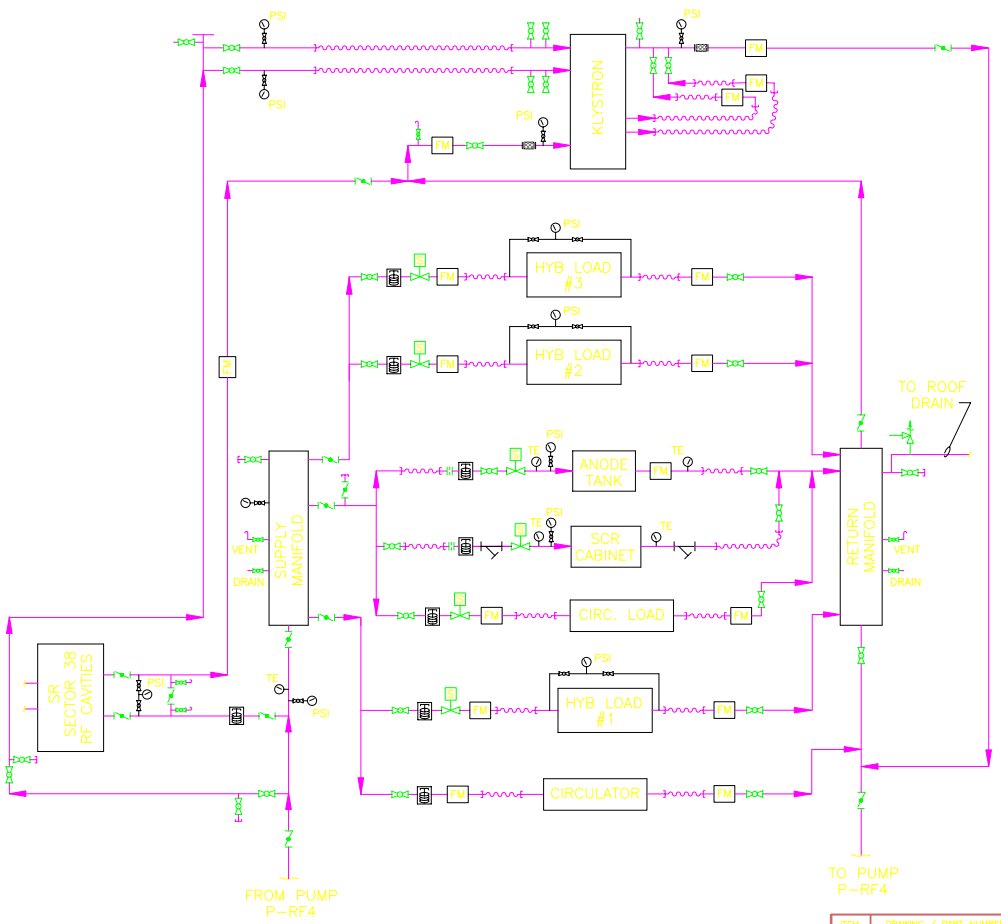


| REVISIONS | | | | | |
|---|---|---|---|---|---|
| ZONE | REV | DESCRIPTION | BY | APPROVED | DATE |
| | 01 | PUMP NAMES CHANGED PER DCN 960710-06 | HPC | | |
| | 02 | REDESIGN CHANGED PER DCN 980527-03 | RMA | | |
| | 03 | REVISED AS SHOWN | LEV | ES | 11/25/98 |

## LEGEND

- GRISWOLD
- OHM RESISTIVITY METER
- PRESSURE GAGE
- THERMOMETER
- TEMPERATURE SENSOR
- PRESS. REDUCG REG.
- PRESS. RELIEF VALVE
- ORIFICE PLATE
- MANUAL 3-WAY VALVE
- FLEX CONNECTOR
- BALL VALVE
- STRAINER
- FLOW METER
- SOLENOID VALVE
- CHECK VALVE
- BUTTERFLY VALVE
- HOSE CONNECTION
- VENT

N

TANK

| ITEM | DRAWING / PART NUMBER | NOMENCLATURE OR DESCRIPTION | MATERIAL / SPEC | QTY |
|---|---|---|---|---|

PARTS LIST / BILL of MATERIALS

UNLESS OTHERWISE SPECIFIED: ALL DIMENSIONS ARE IN INCHES
TOLERANCES:
DECIMALS: .X ± .XX ± .XXX ± ANGULAR: ± °
SURFACE ROUGHNESS: √
REMOVE ALL BURRS AND BREAK SHARP EDGES .03 MAX.
SURFACE TEXTURE TO BE IN ACCORDANCE WITH LATEST ANSI B46.1
DIMENSIONING & TOLERANCING IN ACCORDANCE WITH LATEST ANSI Y14.5
MATERIAL:
ELECTRONIC FILE NAME: A2748702

| | | |
|---|---|---|
| DRAWN BY: HPC\RMA | DATE 03/18/96 | |
| CHECKED BY: E. SWETIN | DATE 3/19/96 | |
| DESIGNED BY: | DATE | |
| RESPONSIBLE ENGINEER: E. SWETIN | DATE 3/19/96 | |
| GROUP LEADER: S. SHARMA | DATE 3/20/96 | |
| APPROVED BY: | DATE | |
| APPROVED BY: | DATE | |
| APPROVED BY: | DATE | |

THIS DRAWING IS THE PROPERTY OF
ARGONNE NATIONAL LABORATORY
ADVANCED PHOTON SOURCE

TITLE:
PIPING AND INSTRUMENT DIAGRAM
SECONDARY D.I. WATER
PUMP P-RF-4

| SIZE | FSCM No. | DRAWING NUMBER: | REV. |
|---|---|---|---|
| C | OHRH5 | 31-104704 | 03 |

SCALE: 1:1 | DO NOT SCALE DRAWING | SHEET: 5 of 5

SECONDARY DI WATER SYSTEM
PUMP P-RF4
BUILDING 420
EAST MEZZANINE

NO SCALE