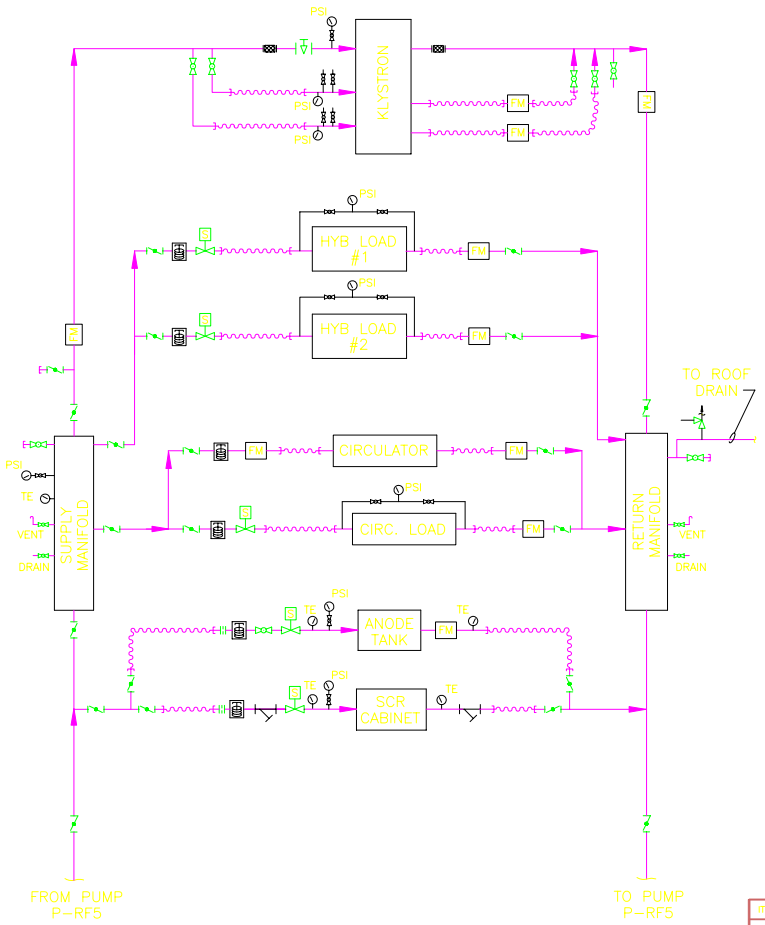

SECONDARY DI WATER SYSTEM
PUMP P-RF5
BUILDING 420
EAST MEZZANINE

NO SCALE

REVISIONS					
ZONE	REV	DESCRIPTION	BY	APPROVED	DATE
	01	PUMP NAMES CHANGED PER DCN 960710-06	HPC		
	02	REDESIGN CHANGED PER DCN 980527-03	RMA		
	03	REVISED AS SHOWN	LEV	ES	12/02/98

LEGEND

- GRISWOLD
- OHM RESISTIVITY METER
- PRESSURE GAGE
- THERMOMETER
- TEMPERATURE SENSOR
- PLUG VALVE
- PRESS. RELIEF VALVE
- PRESS. REDUCG REG.
- MANUAL 3-WAY VALVE
- ORIFICE PLATE
- STRAINER
- FLEX CONNECTOR
- SOLENOID VALVE
- BALL VALVE
- BUTTERFLY VALVE
- FLOW METER
- VENT
- CHECK VALVE
- HOSE CONNECTION

N

GATE VALVE

ITEM	DRAWING / PART NUMBER	NOMENCLATURE OR DESCRIPTION	MATERIAL / SPEC	QTY

PARTS LIST / BILL of MATERIALS

UNLESS OTHERWISE SPECIFIED: ALL DIMENSIONS ARE IN INCHES
TOLERANCES:
DECIMALS: .X ± .XX ± .XXX ±
ANGULAR: ± °
SURFACE ROUGHNESS:
REMOVE ALL BURRS AND BREAK SHARP EDGES .03 MAX.
SURFACE TEXTURE TO BE IN ACCORDANCE WITH LATEST ANSI B46.1
DIMENSIONING & TOLERANCING IN ACCORDANCE WITH LATEST ANSI Y14.5
MATERIAL:
ELECTRONIC FILE NAME: A2748602

		DATE
DRAWN BY:	HPC\RMA	03/18/96
CHECKED BY:	E. SWETIN	3/19/96
DESIGNED BY:		
RESPONSIBLE ENGINEER:	E. SWETIN	3/19/96
GROUP LEADER:	S. SHARMA	3/20/96
APPROVED BY:		
APPROVED BY:		
APPROVED BY:		

THIS DRAWING IS THE PROPERTY OF
ARGONNE NATIONAL LABORATORY
ADVANCED PHOTON SOURCE

TITLE:
PIPING AND INSTRUMENT DIAGRAM
SECONDARY D.I. WATER
PUMP P-RF-5

SIZE	FSCM No.	DRAWING NUMBER	REV.
C	OHRH5	31-104703	03

SCALE: 1:1 | DO NOT SCALE DRAWING | SHEET: 3of 5