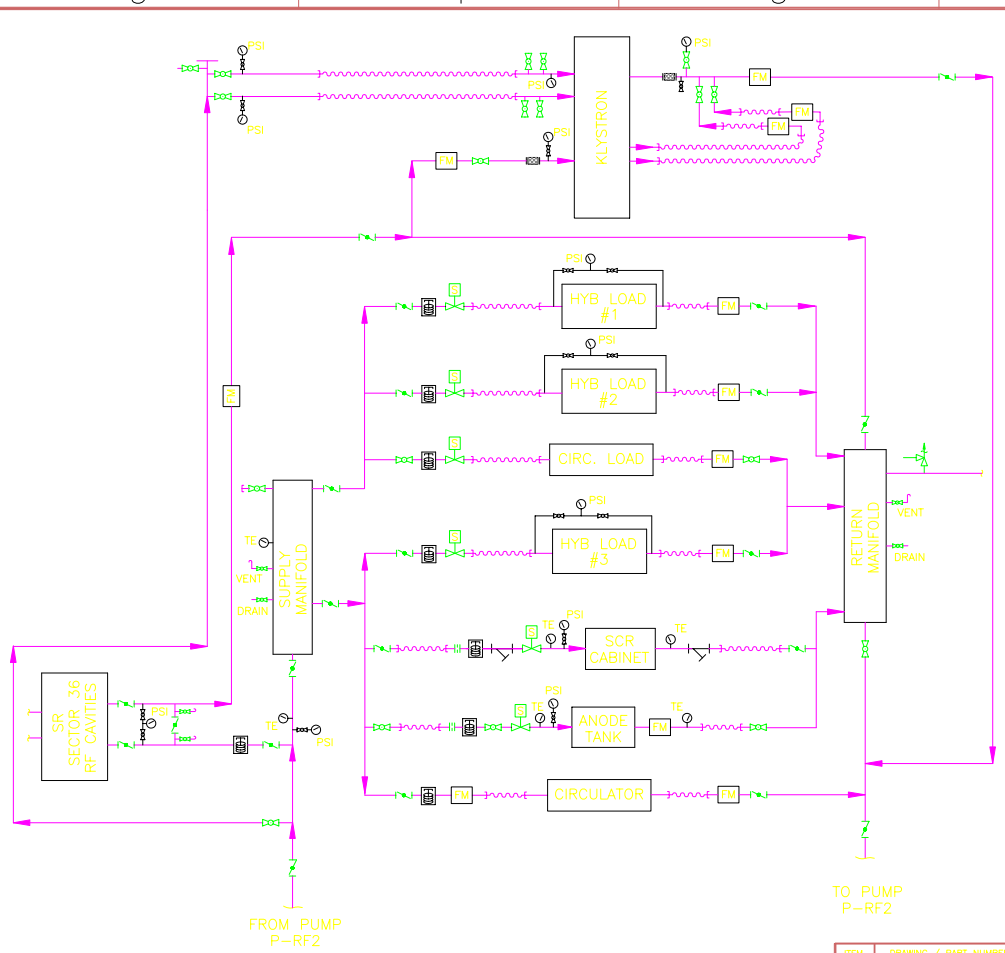


| REVISIONS | | | | | |
|---|---|---|---|---|---|
| ZONE | REV | DESCRIPTION | BY | APPROVED | DATE |
| | 01 | PUMP NAMES CHANGED PER DCN 960710-06 | HPC | | |
| | 02 | REDESIGN CHANGED PER DCN 980527-03 | RMA | | |
| | 03 | REVISED AS SHOWN | LEV | ES | 11/25/98 |

## LEGEND

- GRISWOLD
- OHM RESISTIVITY METER
- PRESSURE GAGE
- THERMOMETER
- TEMPERATURE SENSOR
- GATE VALVE
- PRESS. REDUCG REG.
- PRESS. RELIEF VALVE
- ORIFICE PLATE
- MANUAL 3-WAY VALVE
- FLEX CONNECTOR
- STRAINER
- BALL VALVE
- SOLENOID VALVE
- FLOW METER
- BUTTERFLY VALVE
- CHECK VALVE
- VENT
- HOSE CONNECTION

N

TANK

| ITEM | DRAWING / PART NUMBER | NOMENCLATURE OR DESCRIPTION | MATERIAL / SPEC | QTY |
|---|---|---|---|---|

PARTS LIST / BILL of MATERIALS

SECONDARY DI WATER SYSTEM
PUMP P-RF2
BUILDING 420
EAST MEZZANINE

NO SCALE

UNLESS OTHERWISE SPECIFIED: ALL DIMENSIONS ARE IN INCHES
TOLERANCES:
DECIMALS: .X ± .XX ± .XXX ±
ANGULAR: ± °
SURFACE ROUGHNESS:
REMOVE ALL BURRS AND BREAK SHARP EDGES .03 MAX.
SURFACE TEXTURE TO BE IN ACCORDANCE WITH LATEST ANSI B46.1
DIMENSIONING & TOLERANCING IN ACCORDANCE WITH LATEST ANSI Y14.5
MATERIAL:
ELECTRONIC FILE NAME: A2748502

| | | DATE |
|---|---|---|
| DRAWN BY: | H. P. CZERWINSKI | 03/18/96 |
| CHECKED BY: | E. SWETIN | 3/19/96 |
| DESIGNED BY: | | |
| RESPONSIBLE ENGINEER: | E. SWETIN | 3/19/96 |
| GROUP LEADER: | S. SHARMA | 3/20/96 |
| APPROVED BY: | | |
| APPROVED BY: | | |
| APPROVED BY: | | |

THIS DRAWING IS THE PROPERTY OF
ARGONNE NATIONAL LABORATORY
ADVANCED PHOTON SOURCE

TITLE:
PIPING AND INSTRUMENT DIAGRAM
SECONDARY D.I. WATER
PUMP P-RF-2

| SIZE | FSCM No. | DRAWING NUMBER: | REV. |
|---|---|---|---|
| C | OHRH5 | 31-104702 | 03 |

SCALE: 1:1 | DO NOT SCALE DRAWING | SHEET: 2 of 5