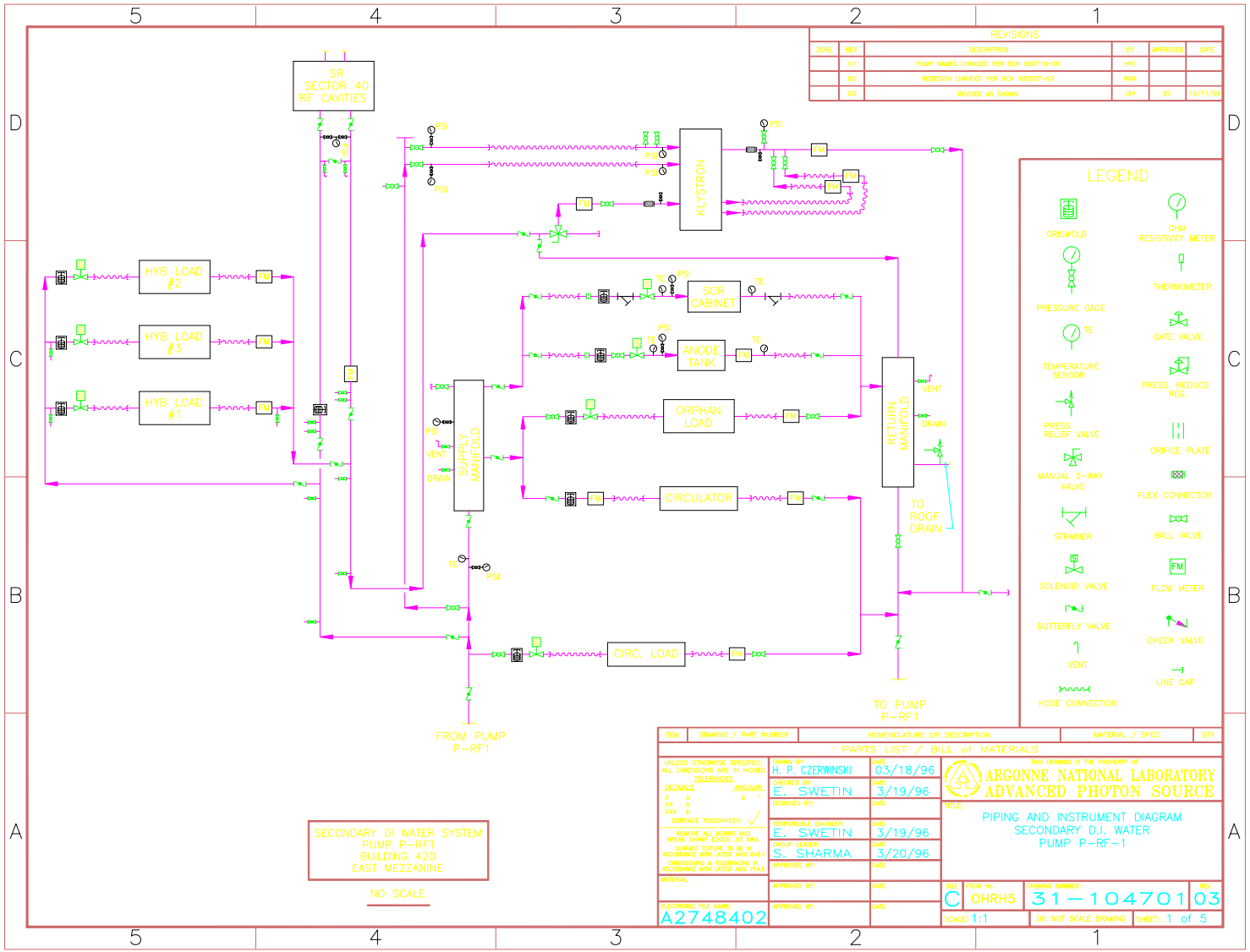

REVISIONS					
ZONE	REV	DESCRIPTION	BY	APPROVED	DATE
	01	PUMP NAMES CHANGED PER DCN 960710-06	HPC		
	02	REDESIGN CHANGED PER DCN 980527-03	RMA		
	03	REVISED AS SHOWN	LEV	ES	12/11/98

LEGEND

- GRISWOLD
- OHM RESISTIVITY METER
- PRESSURE GAGE
- THERMOMETER
- TEMPERATURE SENSOR
- GATE VALVE
- PRESS. REDUCG REG.
- PRESS. RELIEF VALVE
- ORIFICE PLATE
- MANUAL 3-WAY VALVE
- FLEX CONNECTOR
- STRAINER
- BALL VALVE
- SOLENOID VALVE
- FLOW METER
- BUTTERFLY VALVE
- CHECK VALVE
- VENT
- LINE CAP
- HOSE CONNECTION

ITEM	DRAWING / PART NUMBER	NOMENCLATURE OR DESCRIPTION	MATERIAL / SPEC	QTY.

PARTS LIST / BILL of MATERIALS

UNLESS OTHERWISE SPECIFIED: ALL DIMENSIONS ARE IN INCHES
TOLERANCES:
DECIMALS: X ± XX ± XXX ±
ANGULAR: ± °
SURFACE ROUGHNESS: √
REMOVE ALL BURRS AND BREAK SHARP EDGES 1/2 MAX.
SURFACE TEXTURE TO BE IN ACCORDANCE WITH LATEST ANSI B46.1
DIMENSIONING & TOLERANCING IN ACCORDANCE WITH LATEST ANSI Y14.5

MATERIAL:

ELECTRONIC FILE NAME: A2748402

DRAWN BY: H. P. CZERWINSKI	DATE: 03/18/96	
CHECKED BY: E. SWETIN	DATE: 3/19/96	
DESIGNED BY:	DATE:	
RESPONSIBLE ENGINEER: E. SWETIN	DATE: 3/19/96	
GROUP LEADER: S. SHARMA	DATE: 3/20/96	
APPROVED BY:	DATE:	
APPROVED BY:	DATE:	
APPROVED BY:	DATE:	

THIS DRAWING IS THE PROPERTY OF
ARGONNE NATIONAL LABORATORY
ADVANCED PHOTON SOURCE

TITLE:
PIPING AND INSTRUMENT DIAGRAM
SECONDARY D.I. WATER
PUMP P-RF-1

SIZE	FSCM No.	DRAWING NUMBER	REV.
C	OHRH5	31-104701	03
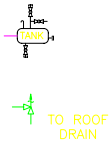
SCALE: 1:1 | DO NOT SCALE DRAWING | SHEET: 1 of 5