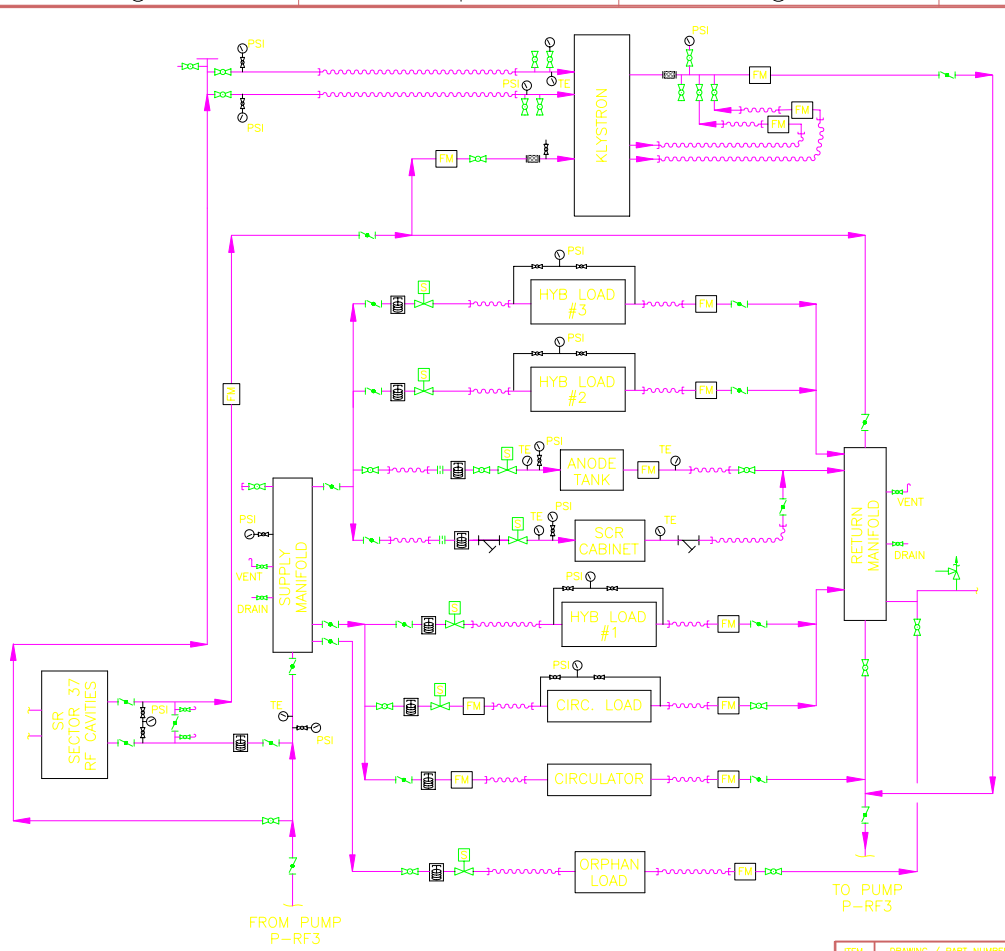

REVISIONS					
ZONE	REV	DESCRIPTION	BY	APPROVED	DATE
	01	PUMP NAMES CHANGED PER DCN 960710-06	HPC		
	02	REDESIGN CHANGED PER DCN 980527-03	RMA		
	03	REVISED AS SHOWN	LEV	ES	11/25/98

LEGEND

GRISWOLD
OHM RESISTIVITY METER
PRESSURE GAGE
THERMOMETER
TEMPERATURE SENSOR
GATE VALVE
PRESS. REDUCG REG.
PRESS. RELIEF VALVE
ORIFICE PLATE
MANUAL 3-WAY VALVE
FLEX CONNECTOR
STRAINER
BALL VALVE
SOLENOID VALVE
FLOW METER
BUTTERFLY VALVE
CHECK VALVE
VENT
HOSE CONNECTION

ITEM	DRAWING / PART NUMBER	NOMENCLATURE OR DESCRIPTION	MATERIAL / SPEC	QTY

PARTS LIST / BILL of MATERIALS

SECONDARY DI WATER SYSTEM
PUMP P-RF3
BUILDING 420
EAST MEZZANINE

NO SCALE

UNLESS OTHERWISE SPECIFIED: ALL DIMENSIONS ARE IN INCHES
TOLERANCES:
DECIMALS: .X ± .XX ± .XXX ±
ANGULAR: ± °
SURFACE ROUGHNESS: √
REMOVE ALL BURRS AND BREAK SHARP EDGES .03 MAX.
SURFACE TEXTURE TO BE IN ACCORDANCE WITH LATEST ANSI B46.1
DIMENSIONING & TOLERANCING IN ACCORDANCE WITH LATEST ANSI Y14.5
MATERIAL:
ELECTRONIC FILE NAME: A2417302

DRAWN BY: H. P. CZERWINSKI	DATE: 03/18/96	
CHECKED BY: E. SWETIN	DATE: 3/19/96	
DESIGNED BY:	DATE:	
RESPONSIBLE ENGINEER: E. SWETIN	DATE: 3/19/96	
GROUP LEADER: S. SHARMA	DATE: 3/20/96	
APPROVED BY:	DATE:	
APPROVED BY:	DATE:	
APPROVED BY:	DATE:	

THIS DRAWING IS THE PROPERTY OF
ARGONNE NATIONAL LABORATORY
ADVANCED PHOTON SOURCE

TITLE:
PIPING AND INSTRUMENT DIAGRAM
SECONDARY D.I. WATER
PUMP P-RF-3

SIZE	FSCM No.	DRAWING NUMBER:	REV.
C	OHRH5	31-104700	03

SCALE: 1:1 | DO NOT SCALE DRAWING | SHEET: 4 of 5