(E)	PLOT SCALE: 1=4	DWG. SCALE: 4	A09890

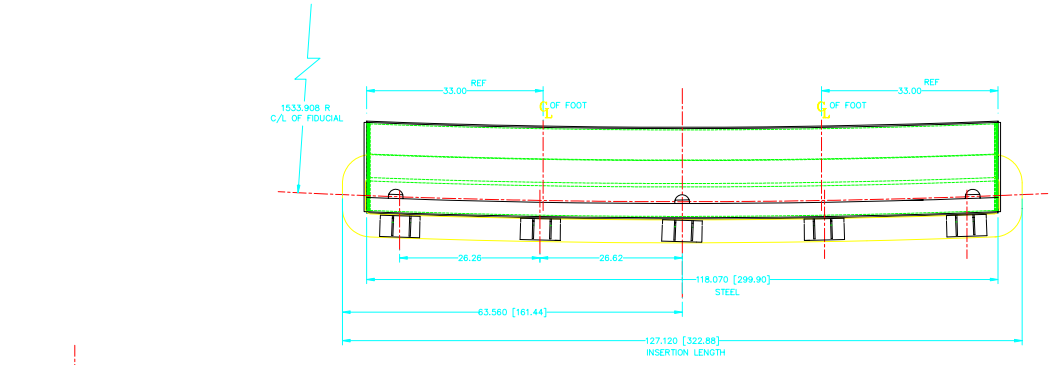

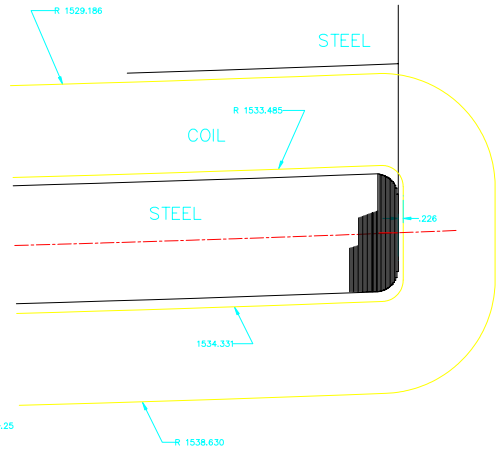

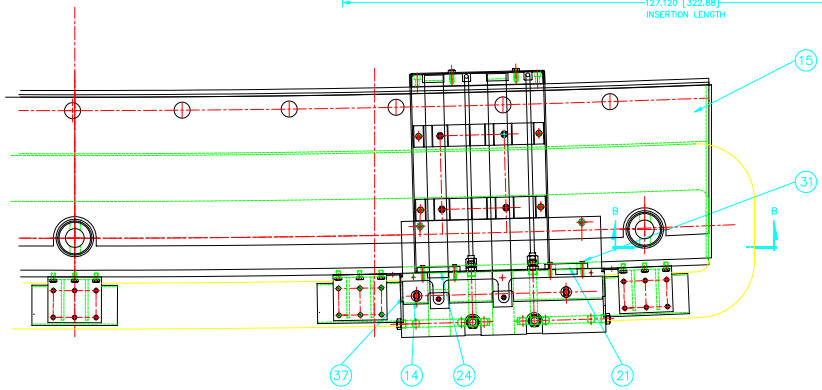

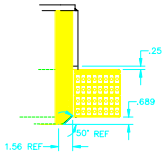

SECTION B-B

SOURCE:
BAND-IT CORP.
PO BOX 16307
DENVER CO. 80216-0307
303\320-4555
OR EQUIV.

NOTES:

1. ALL DIMENSIONS ARE FOR REFERENCE ONLY.
2. DIMENSIONS IN PARENTHESIS IS METRIC CENTIMETERS.
3. BRAZING REQUIREMENTS:
   BRAZE – USE "EASY FLOW 45" (1125°F)
   FLUX – USE "HANDY"
   CLEANUP – USE WARM WATER
   BUFF WITH SCOTCH BRITE

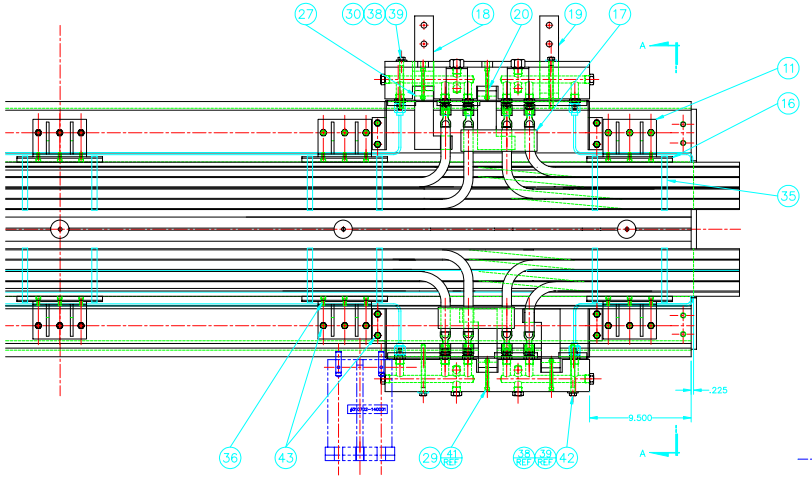

ELECTRICAL & WATER CONNECTIONS

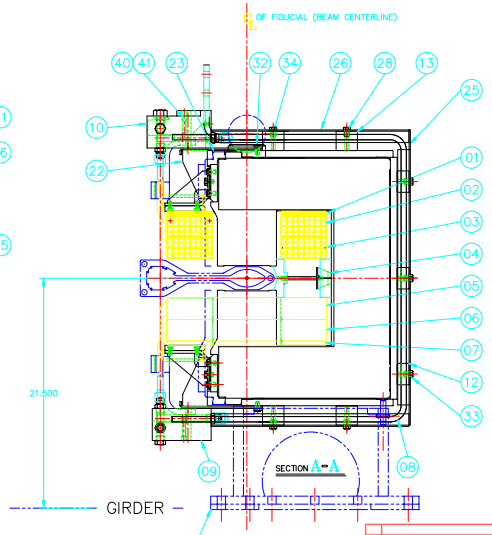

FOR INSTALLATION AND WELDING PROCEDURES SEE DRAWING NO. 310702-140000

ITEM	DWG/PART NUMBER	NOMENCLATURE OR DESCRIPTION	MATERIAL / SPEC	QTY.
43	3/8-16 UNC	HEX HEAD CAP SCREW X .62" LG.	STEEL	38
42	3/8-16 UNC	HEX HEAD CAP SCREW X 4.00" LG.	STEEL	2
41	1/4-20 UNC	NUT	STEEL	4
40	1/4-20 UNC	SOCKET HEAD CAP SCREW X 3.25" LG.	STEEL	2
39	3/8-16 UNC	NUT	STEEL	4
38	ø 3/8	WASHER-FLAT	STEEL	4
37	#6-32 UNC	FLAT HEAD SCREW X .25" LG.	STEEL	6
36	1/4-20 UNC	SOCKET HEAD CAP SCREW X .50" LG.	STEEL	60
35	C-406	STRAPPING .030 X .75	STN.STL.T-316	AR
34	3/8-16 UNC	SOCKET HEAD CAP SCREW X 1.75" LG.	STEEL	8
33	3/8-16 UNC	SOCKER HEAD CAP SCREW X 1.12" LG.	STEEL	6
32	3/8-16 UNC	HEX HEAD CAP SCREW X .62" LG.	STEEL	4
31	1/4-20 UNC	HEX HEAD CAP SCREW X 1.00" LG.	STEEL	4
30	3/8-16 UNC	HEX HEAD CAP SCREW X 4.50" LG.	STEEL	2
29	1/4-20 UNC	SOCKET HEAD CAP SCREW X 2.75" LG.	STEEL	2
28	3/8-16 UNC	HEX HEAD CAP SCREW X .50" LG.	STEEL	14
27	310101-00080	COIL FLAG	SEE DETAIL	4
26	310101-00103	TOP AND BOTTOM PROTECTION COVER	SEE DETAIL	2
25	310101-00104	SIDE PROTECTION COVER	SEE DETAIL	1
24	310101-00102	CLAMP PLATE	SEE DETAIL	1
23	310101-00083	INSULATING PLATE	SEE DETAIL	2
22	310101-00082	MANIFOLD BRACKET	SEE DETAIL	2
21	310101-00081	FLAG CLAMP PLATE	SEE DETAIL	1
20	310101-00071	CROSS OVER BAR	SEE DETAIL	1
19	310101-00072	CROSS OVER FLAG	SEE DETAIL	1
18	310101-00073	CONNECTING FLAG	SEE DETAIL	1
17	310101-00070	CONNECTING BAR	SEE DETAIL	2
16	310101-00069	COIL SUPPORT BLOCK	SEE DETAIL	10
15	310101-00066	CORE ASSY	SEE DETAIL	1
14	310101-00085	WASHER	SEE DETAIL	4
13	310101-00084	STAND OFF-TOP AND BOTTOM	SEE DETAIL	4
12	310101-00086	STAND OFF-SIDE	SEE DETAIL	3
11	310101-00068	COIL SUPPORT BRACKET	SEE DETAIL	10
10	310101-00075	TOP MANIFOLD	SEE DETAIL	1
09	310101-00074	BOTTOM MANIFOLD	SEE DETAIL	1
08	310101-00087	COOLING TUBE CROSSOVER ASSY	SEE DETAIL	2
07	310101-00064	LOWER CORRECTION COIL ASSY	SEE DETAIL	1
06	310101-00063	LOWER BOTTOM COIL ASSY	SEE DETAIL	1
05	310101-00053	LOWER TOP COIL ASSY	SEE DETAIL	1
04	310101-00088	POLE GAP SUPPORT ASSY	SEE DETAIL	1
03	310101-00062	UPPER BOTTOM COIL ASSY	SEE DETAIL	1
02	310101-00054	UPPER TOP COIL ASSY	SEE DETAIL	1
01	310101-00065	UPPER CORRECTION COIL ASSY	SEE DETAIL	1

PARTS LIST

STORAGE RING
TECHNICAL COMP.
DIPOLE MAGNETS
ASSEMBLY
A09890
310101-00055-02

SYM	CHANGE DESCRIPTION	BY	CHKD	DATE
01	SEE DCN # 930329-01	SH		8/13/93
01	SEE DCN # 921117-06	CRP		11/17/92

REVISIONS

UNLESS OTHERWISE SPECIFIED ALL DIMENSIONS ARE IN INCHES
TOLERANCES
DECIMALS ±.005
FRACTIONS ±.1/64
X ±.5
XX ±.25
XXX ±.010
SURFACE ROUGHNESS √
REMOVE ALL BURRS AND SHARP EDGES
MATERIAL SHALL BE FREE FROM ALL DEFECTS
MATERIAL SHALL BE IN A CONDITION AS SUPPLIED
CHANGE IN A DIMENSION MAY BE MADE BY DRAWING CHANGE

DO NOT SCALE DRAWING

LOG NUMBER A09890
DRAWN BY TOM CRAIN 12/2/91
CHECKED BY
ISSUED BY
RESPONSIBLE ENGINEER
MATERIAL SEE PARTS LIST

THIS DRAWING IS THE PROPERTY OF ARGONNE NATIONAL LABORATORY

TITLE ADVANCED PHOTON SOURCE
TECHNICAL COMPONENTS
STORAGE RING
DIPOLE MAGNETS
MAGNET ASSEMBLY

SCALE 1:4 SHEET 1 of 1 SIZE E REVISION NUMBER 310101-00055-02