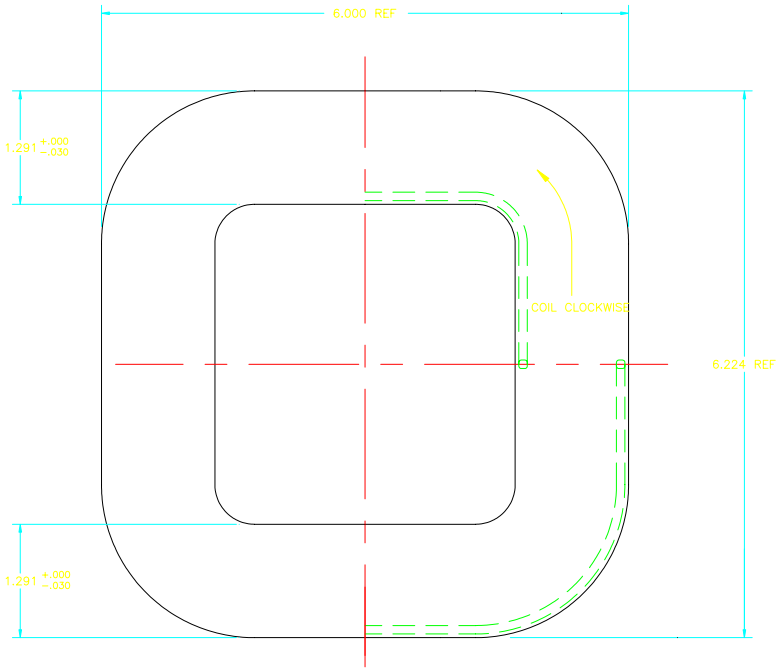

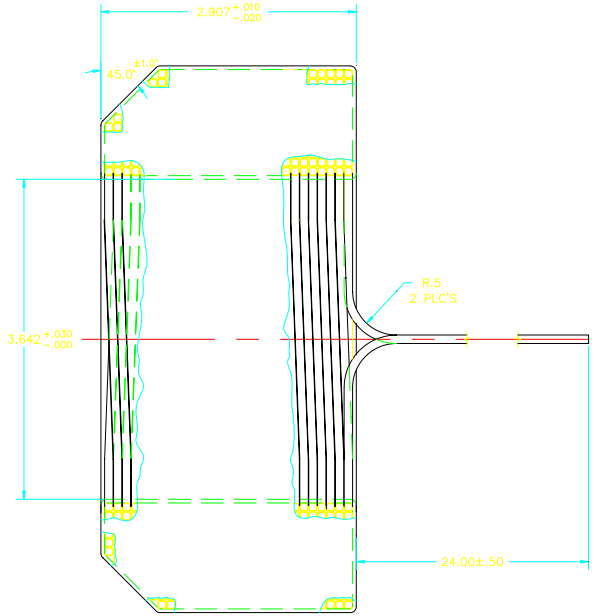

CONDUCTOR INSULATION REF

SCALE 8=1

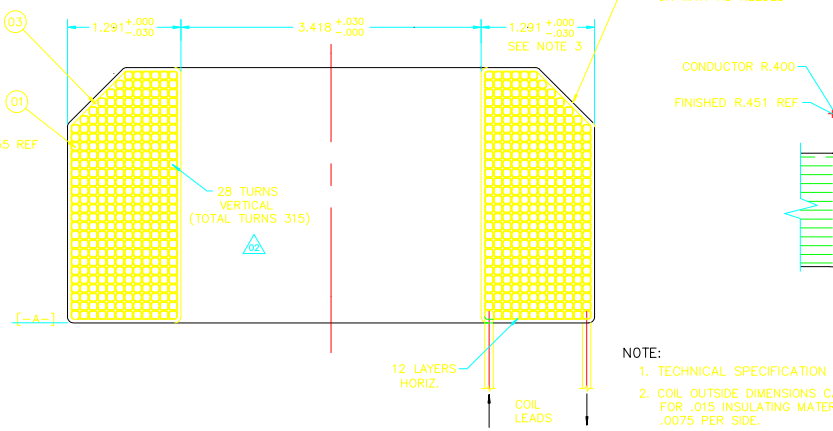

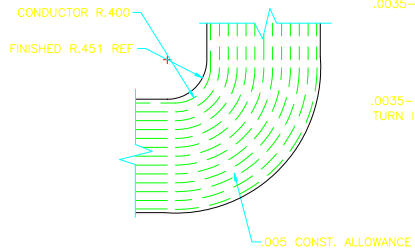

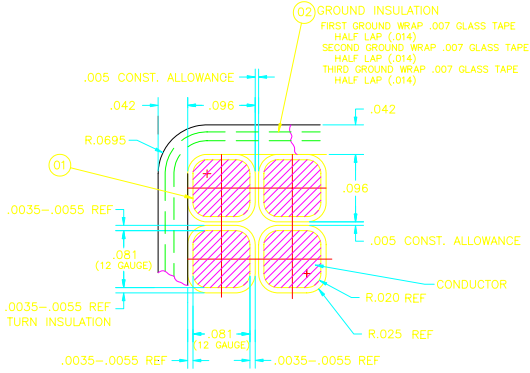

ENLARGED SCALE OF COIL SECTION

SCALE 8=1

SEE NOTE 2

NOTE:

1. TECHNICAL SPECIFICATION 310102−00217
2. COIL OUTSIDE DIMENSIONS CALCULATED FOR .015 INSULATING MATERIAL OR .0075 PER SIDE.
3. LEAD SIDE OF COIL MAY BE LARGER THAN SPECIFIED, BECAUSE OF LEAD TRANSITIONS.

ITEM	DWG/PART NUMBER	NOMENCLATURE OR DESCRIPTION	MATERIAL / SPEC	QT
03		EPOXY	SEE SPEC.	A/R
02		FIBERGLASS TAPE .007 X 1"WIDE	FIBERGLASS	A/R
01	31010204−00017	COPPER CONDUCTOR (12 GAUGE)	COPPER, POLYESTER/GLASS, HEAVY FILM	A/R

PARTS LIST

CHM	CHANGE DESCRIPTION	BY	CHKD	DATE
03	SEE DCN NO. 930202−01	AEN		10/01
01	SEE DCN NO. 930113−01	CRP		8/08

REVISIONS

UNLESS OTHERWISE SPECIFIED ALL DIMENSIONS ARE IN INCHES
TOLERANCES
DECIMALS ANGULAR
.X ±.1 ±.25°
.XX ±.02
.XXX ±.005
SURFACE ROUGHNESS 125 √

POPULAR SIZES AND MATERIALS ARE PREFERRED
DO NOT SCALE DRAWING
DIMENSIONS IN [ ] ARE IN MM

DO NOT SCALE DRAWING

LOG NUMBER A08881

DRAWN BY A. OBERFELD 8/17/01

CHECKED BY

DESIGNER

RESPONSIBLE ENGINEER

MATERIAL

AP NUMBER

PROJECT MGR

APPROVED/RELEASED

THIS DRAWING IS THE PROPERTY OF ARGONNE NATIONAL LABORATORY

TITLE ADVANCED PHOTON SOURCE
STORAGE RING
TECHNICAL COMPONENTS
SKEW QUADRUPOLE MAGNETS
COIL ASSEMBLY

SCALE 2:1 SHEET 1 of 1

SIZE E

DRAWING NUMBER 31010204−00003−02