(D)	PLOT SCALE: 1=1	DWG. SCALE: 1	A08948

SUGGESTED ASSEMBLY PROCEDURE

1. WET WIND COILS ON FIXTURE USING HEAT CURE EPOXY. SEE NOTE 3.
2. CURE COIL ASSEMBLY ON WINDING FIXTURE MANDREL IN OVEN. CURE AT 300°F FOR 2 HOURS.
3. REMOVE FIXTURE FROM OVEN, LET COOL TO 100°F, REMOVE COIL FROM MANDREL.
4. GROUND WRAP COIL ASSEMBLY. WRAP WITH TEDLAR STRIPPING TAPE AND SHRINK MYLAR. PUNCH HOLES THRU TEDLAR AND MYLAR.
5. PLACE COIL IN CURING MOLD AND BATCH/BATH POT. SEE NOTE 4. CURE AT 300°F FOR 6 HOURS.
6. CLEAN-UP AND INSPECT AFTER CURING. CHECK FOR SIZE, Ls, Q, RESISTANCE. WRAP WITH ALUMINUM FOIL AND HI-POT TO 500V DC BETWEEN COILS (2) TO FOIL. ALSO HI-POT BETWEEN COILS 1 & 2. MAXIMUM LEAKAGE CURRENT NOT TO EXCEED 5ua (MICRO-AMPS).

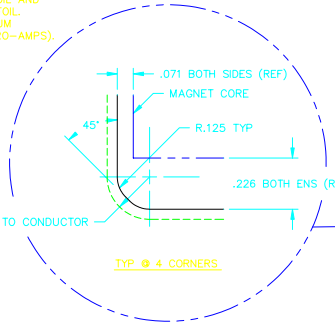

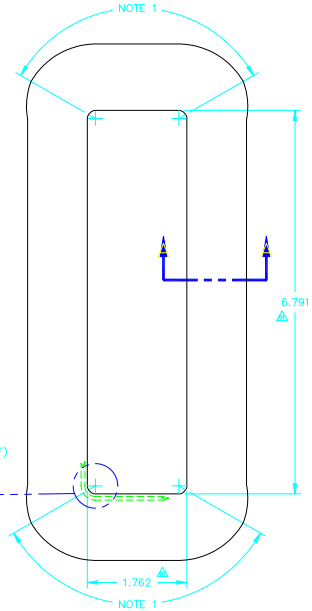

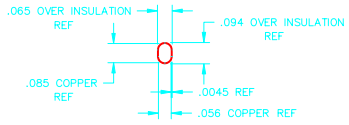

CONDUCTOR DETAIL
SCALE 4=1

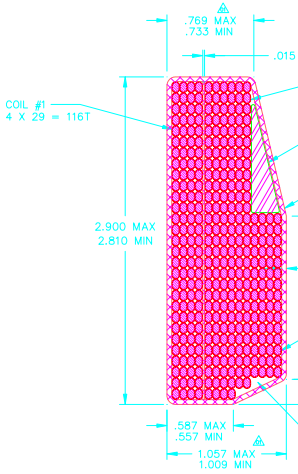

SECTION A-A
SCALE 2=1

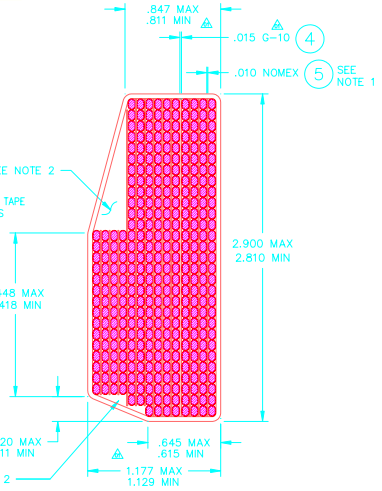

SECTION B-B
SCALE 2=1

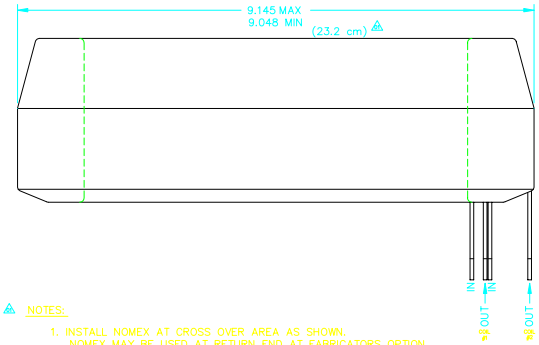

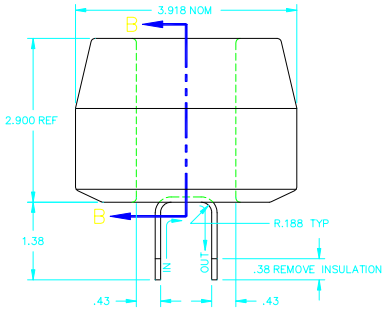

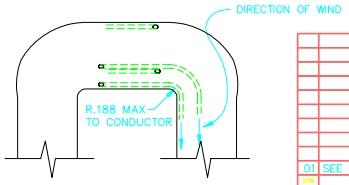

NOTES:

1. INSTALL NOMEX AT CROSS OVER AREA AS SHOWN. NOMEX MAY BE USED AT RETURN END AT FABRICATORS OPTION.
2. FILL VOIDS WITH FIBER GLASS TAPE, CHOPPED FIBER GLASS OR MATT. OTHER MATERIAL MAY BE USED WITH PRIOR APPROVAL BY A.N.L.
3. HEAT CURE FILLED EPOXY, DER 332, DER 736, NMA AND CABOSIL.
4. HEAT CURE EPOXY, DER 332, DER 736, NMA.

ITEM	DWG/PART NUMBER	NOMENCLATURE OR DESCRIPTION	MATERIAL / SPEC	QTY
7		FILLER FOR EPOXY, CABOSIL		A/R
6		HEAT CURE EPOXY DER 332 75 PBW DER 736 25 PBW NMA 90 PBW		A/R
5		CROSS OVER DIVIDER, .010	NOMEX	AR
4		COIL DIVIDER, .015 G-10	NEMA G-10 INSUL	1
3	250103-00010	CENTER COIL PULTRUSION	G-10 FIBERGLASS	2
2		GROUND WRAP 1/2" WIDE X .007	DRY GLASS TAPE	AR
1	250103-00011	PAR CORRECTOR MAGNET CONDUCTOR	SEE DETAIL	AR

PARTS LIST

SYM	CHANGE DESCRIPTION	BY	CHKD	DATE
01	SEE DCN 930205-05	KWC		

REVISIONS

DO NOT SCALE DRAWING

UNLESS OTHERWISE SPECIFIED ALL DIMENSIONS ARE IN INCHES
TOLERANCES
DECIMALS X: ±.1 XX: ±.03 XXX: ±.015
ANGULAR ±.5°
SURFACE ROUGHNESS 125/√
REMOVE ALL BURRS AND BREAK SHARP EDGES .03 MAX.
GROUP ACTS TO BE IN ACCORDANCE WITH LATEST ANSI Y14.5
DIMENSIONING & TOLERANCING IN ACCORDANCE WITH LATEST ANSI Y14.5

LOG NUMBER A08948

DRAWN BY K. COSTELLO 9-17-92
CHECKED BY J. JAGGER 9/22/92
DESIGNED K. COSTELLO 9-22-92
RESPONSIBLE ENGINEER J. JAGGER 9/22/92
GP LEADER J. JAGGER 9/22/92
PROJECT MGR
APPROVED/RELEASED

MATERIAL SEE PARTS LIST

THIS DRAWING IS THE PROPERTY OF ARGONNE NATIONAL LABORATORY

TITLE ADVANCED PHOTON SOURCE
INJECTOR POSITRON ACCUMULATOR RING SEXTUPOLE CENTER COIL ASSEMBLY

SCALE 1:1 SHEET 1 of 1 SIZE D DRAWING NUMBER 250103-00005-01