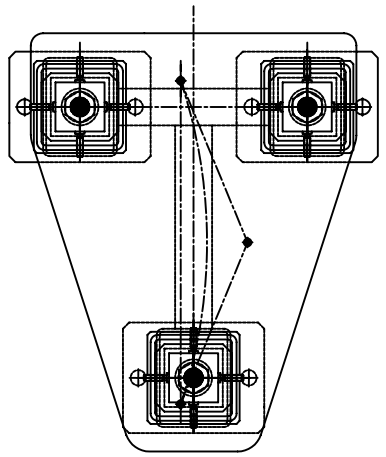

SECT A–A

SCALE 1"=8"

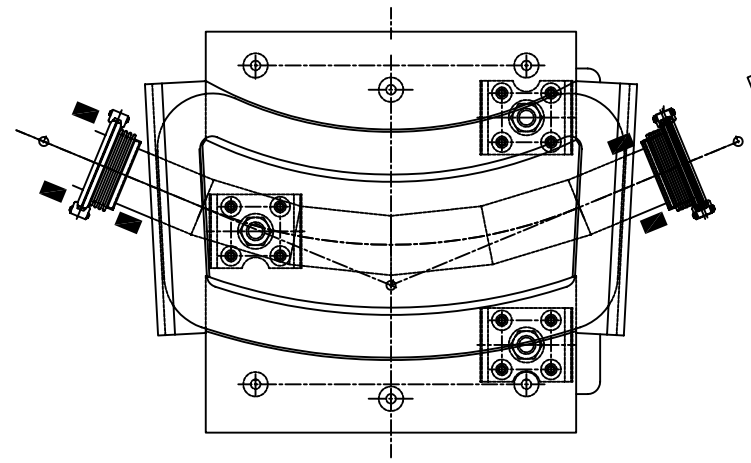

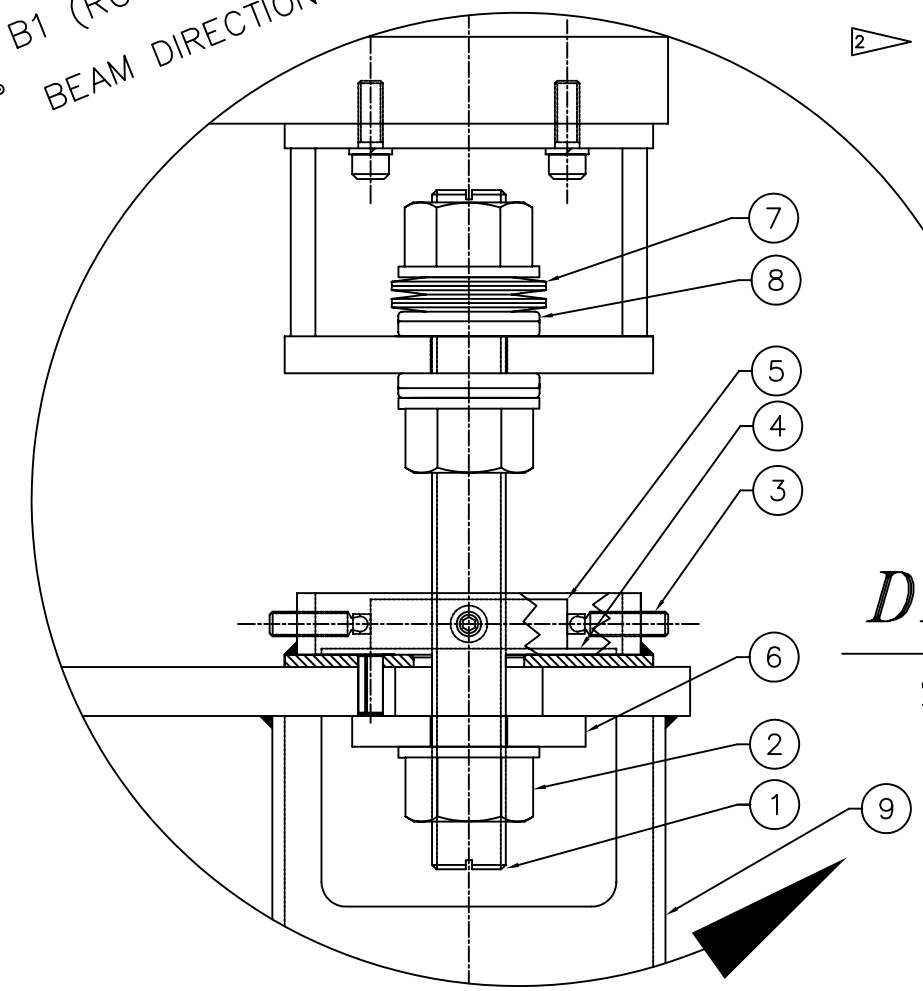

DETAIL #1

SCALE 1"=2"

1 SOURCE: CARR LANE MANUFACTING CO.
4200 CARR LANE CT.
P.O. BOX 13149
ST. LOUIS, MISSOURI 63119
TELE: 314/647–6200

2 SOURCE: S.W. ANDERSON COMPANY
2425 WISCONSIN AVE.
DOWNERS GROVE, ILL. 60515
TELE: 708/964–2600

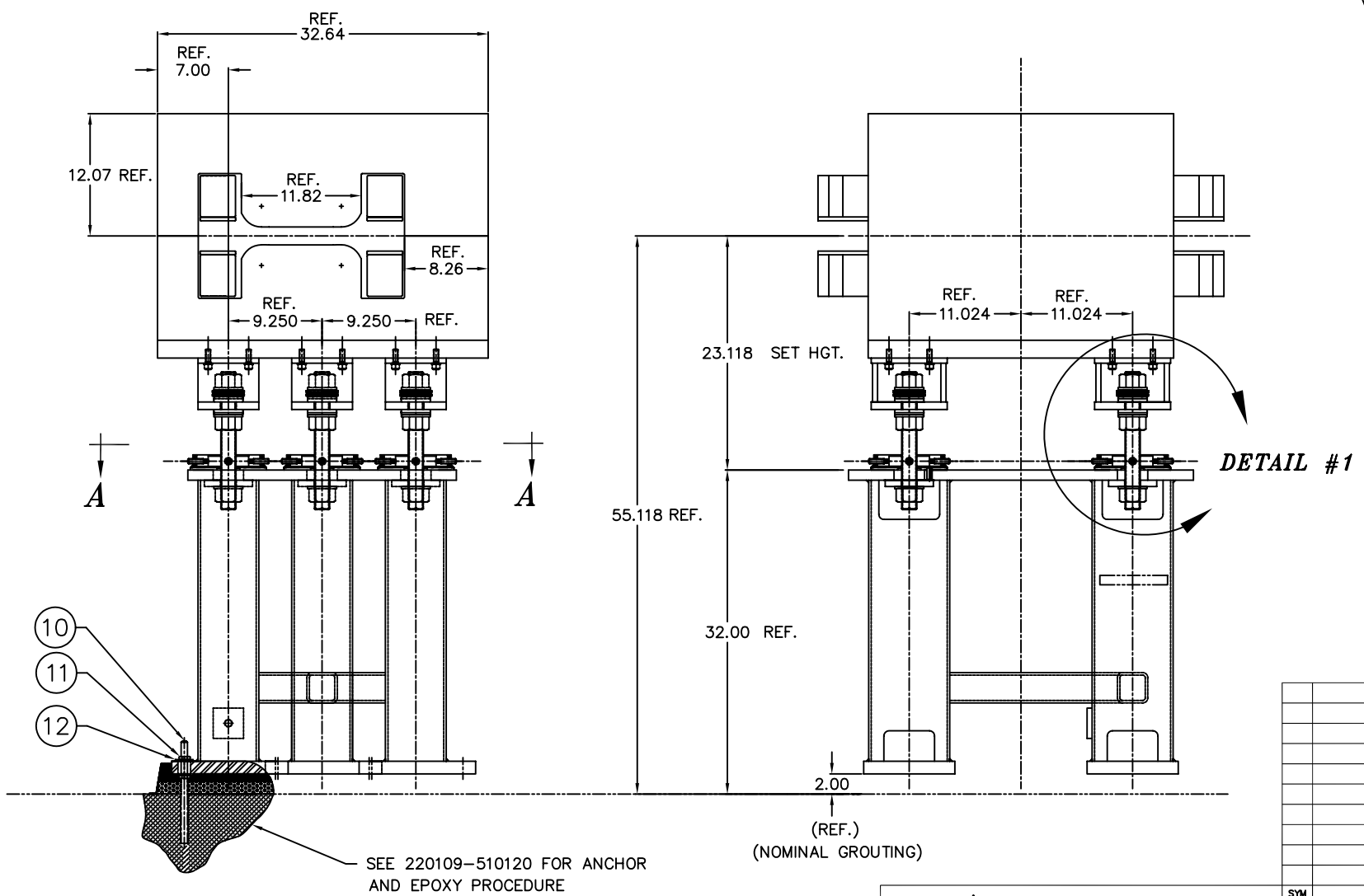

ITEM	DWG/PART NUMBER	NOMENCLATURE OR DESCRIPTION	MATERIAL / SPEC	QTY
12	MS 15795–821	21/32" I.D. X 1.75 " O.D. WASHER	PURCHASE	12
11	5/8–18	HEXAGON JAM NUT	PURCHASE	12
10	5/8–18 X 10" LG.	STAINLESS STEEL STUD	PURCHASE	6
09	250106–510100	DIPOLE MAGNET SUPPORT STAND	SEE DETAIL	3
1 08	CL10–SW SPECIAL	SPHERICAL WASHER STAINLESS STEEL	PUR.	6
2 07	BS–70–40.5–5.0	BELLEVILLE SPRING WASHER	PUR.	12
06	220109–510210	SQUARE WASHER	SEE DETAIL	3
05	220109–510208	STOP FRAME SLIDE	SEE DETAIL	3
04	220109–510207	DU BEARING SPACER	SEE DETAIL	3
1 03	220109–510206	SWIVEL SCREW	SEE ASSY.	12
1 02	1 1/2–18 UNEF	FLANGED HEX NUT S.S.	PUR.	9
01	SOB1–1	THREADED ROD	SEE DETAIL	3

PARTS LIST

SYM	CHANGE DESCRIPTION	BY	CHKD	DATE

REVISIONS

NEXT ASS'Y: 250106–500000

UNLESS OTHERWISE SPECIFIED: ALL DIMENSIONS ARE IN INCHES
TOLERANCES
DECIMALS: .X ±, .XX ±.03, .XXX ±.010
ANGULAR: ± °
SURFACE ROUGHNESS 125√
REMOVE ALL BURRS AND BREAK SHARP EDGES .03 MAX.
SURFACE TEXTURE TO BE IN ACCORDANCE WITH LATEST ANSI B46.1
DIMENSIONING & TOLERANCING IN ACCORDANCE WITH LATEST ANSI Y14.5
DO NOT SCALE DRAWING

LOG NUMBER A0990600

THIS DRAWING IS THE PROPERTY OF
ARGONNE NATIONAL LABORATORY

DRAWN BY BRAZDO	DATE 3/93	GP LEADER	DATE
CHECKED BY		PROJECT MGR	
DESIGNER CRAIN TOM		APPROVED/RELEASED	
RESPONSIBLE ENGINEER VOGT MARK			

TITLE
ADVANCED PHOTON SOURCE
ACCELERATOR SYSTEMS DIVISION
POSITRON ACCUMULATOR RING (PAR)
PAR MAGNETS SUPPORT STANDS
DIPOLE MAGNET

MATERIAL: SEE PARTS LIST FOR MATERIAL
SCALE 1:8
SHEET 1 of 1
SIZE D
DRAWING NUMBER 250106–510200