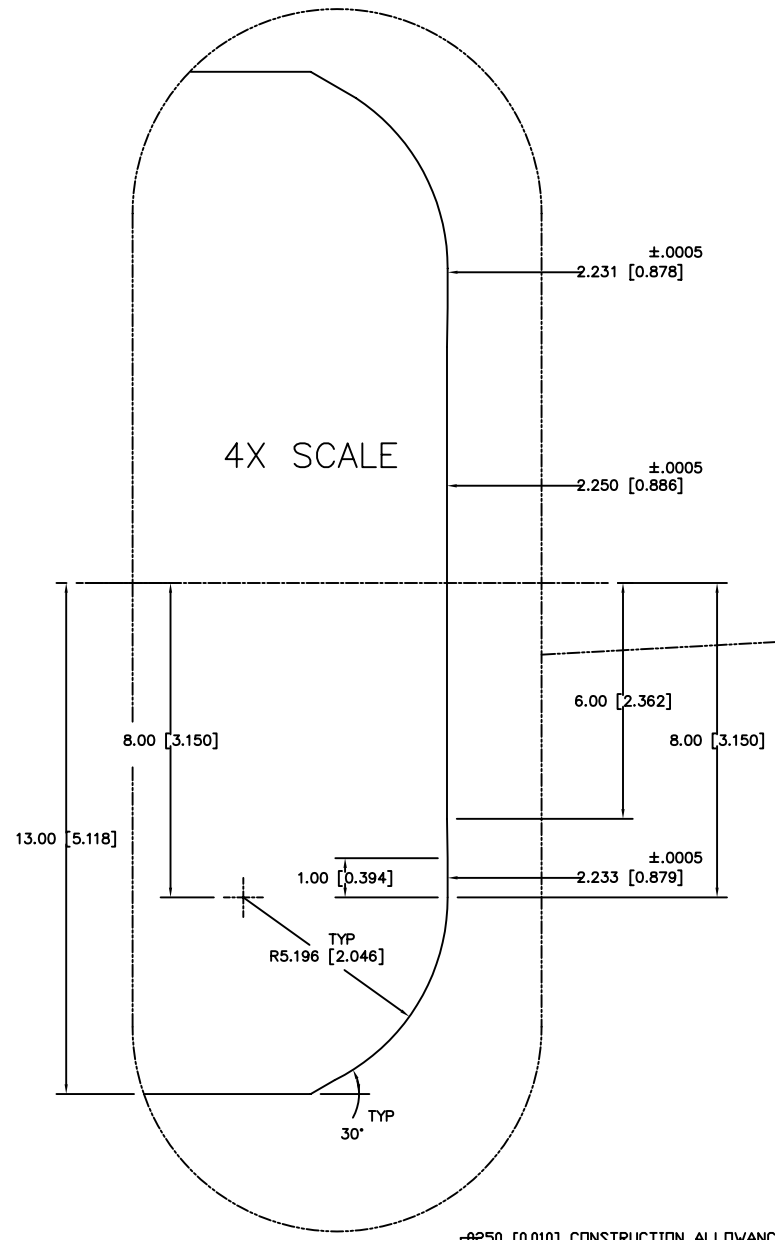

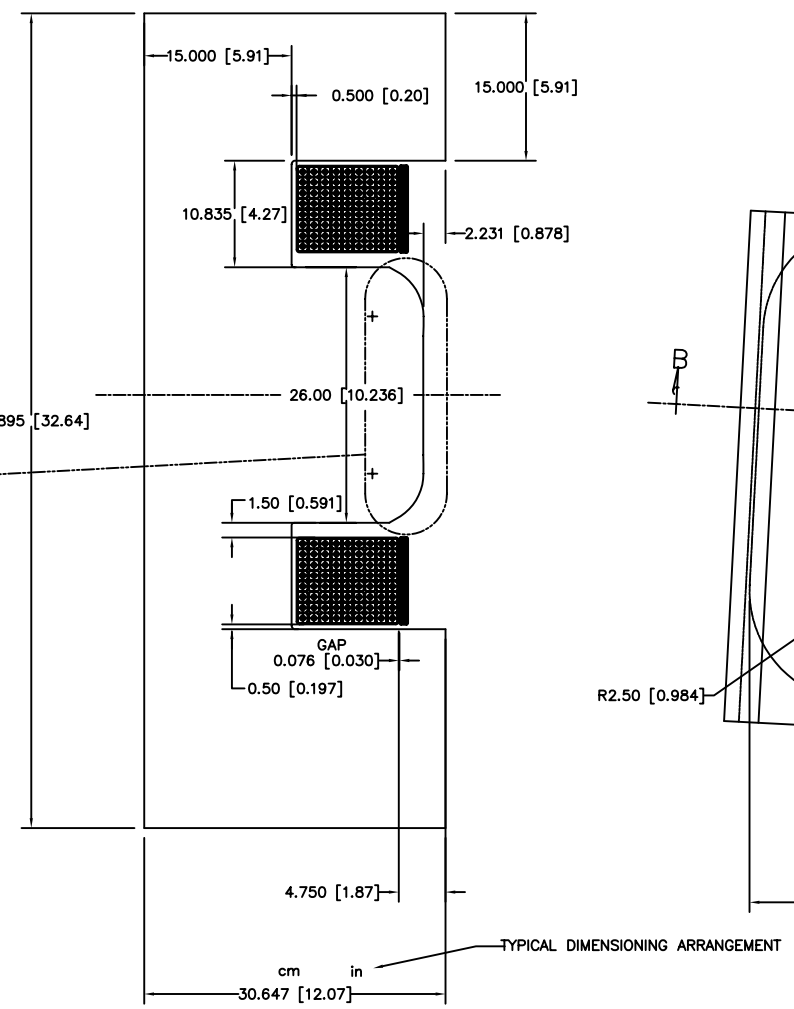

SECTION A–A

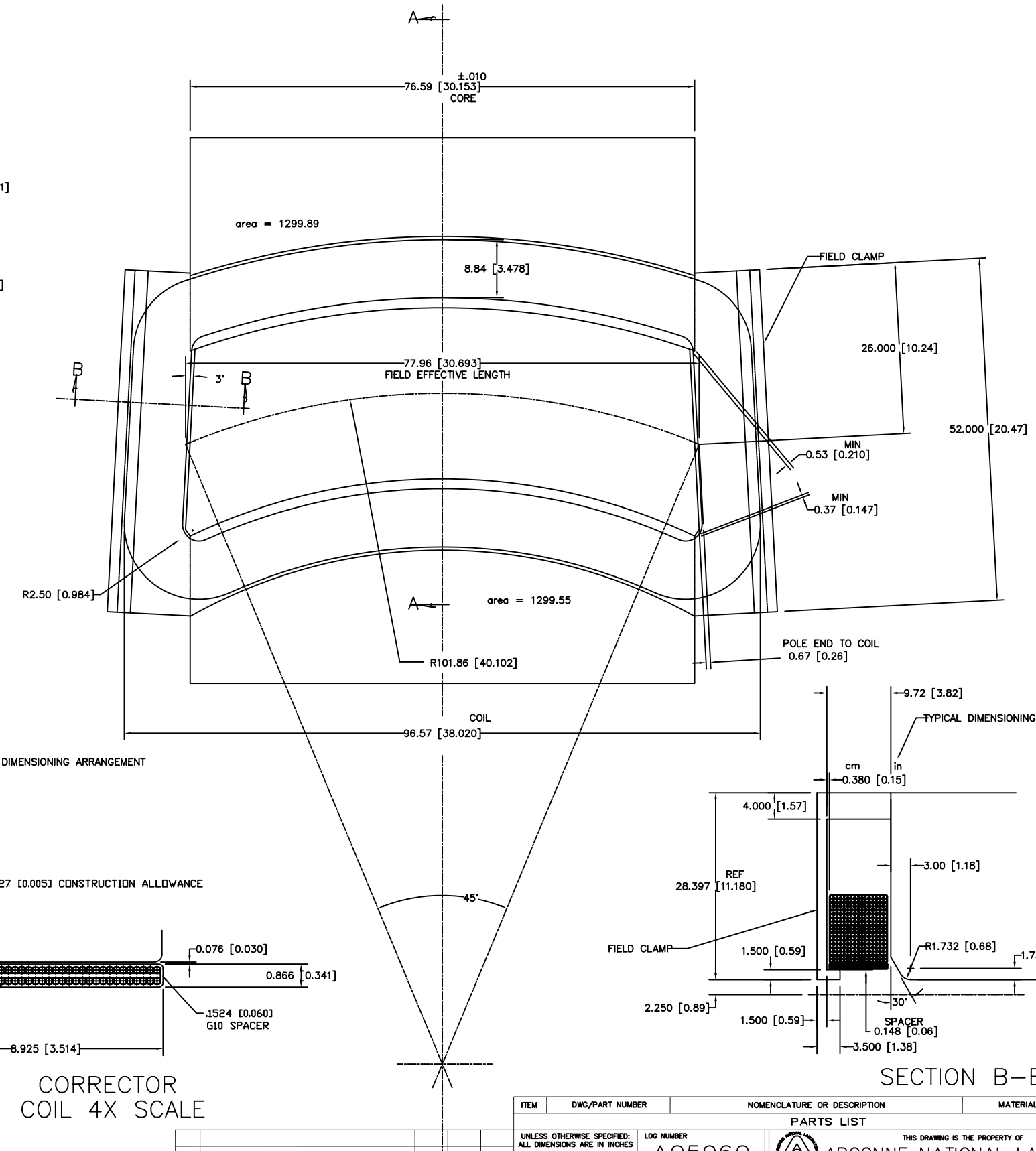

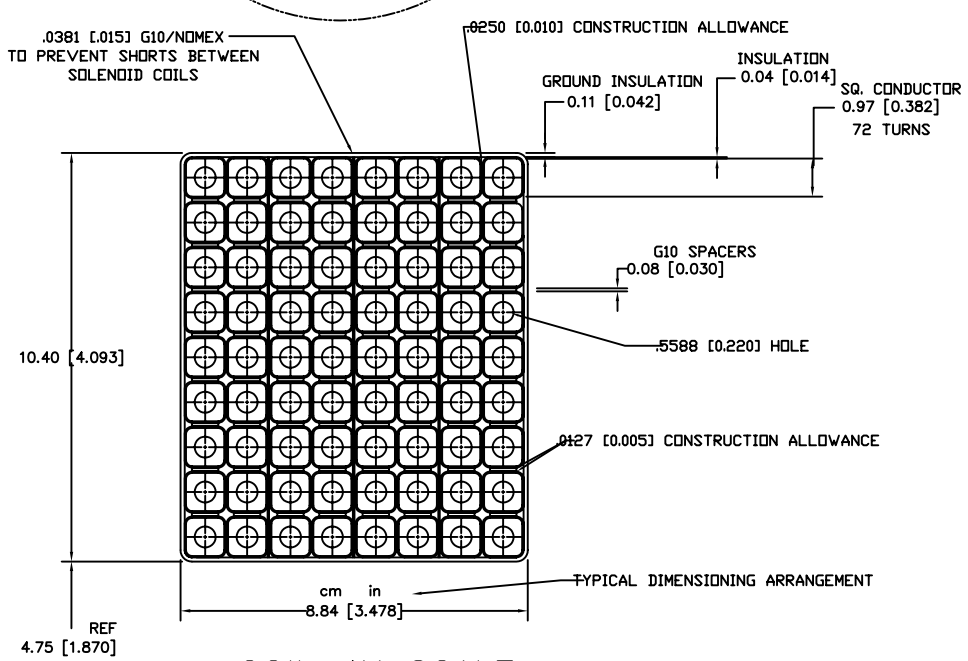

COIL 4X SCALE

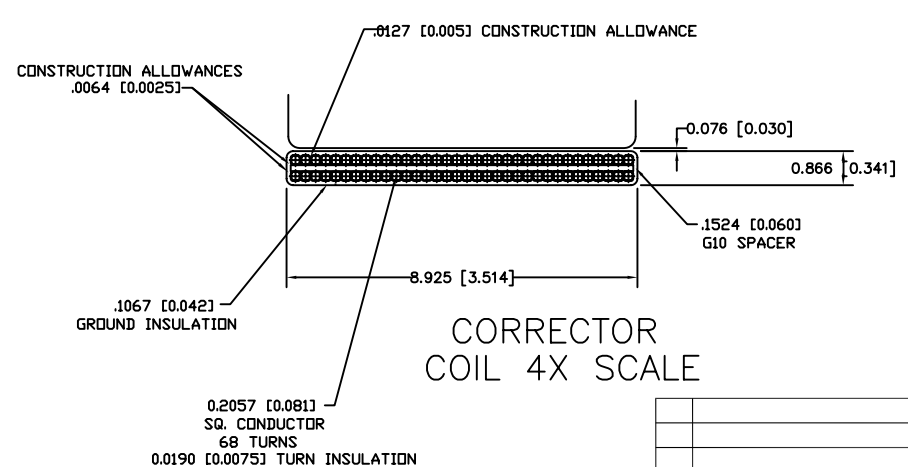

CORRECTOR
COIL 4X SCALE

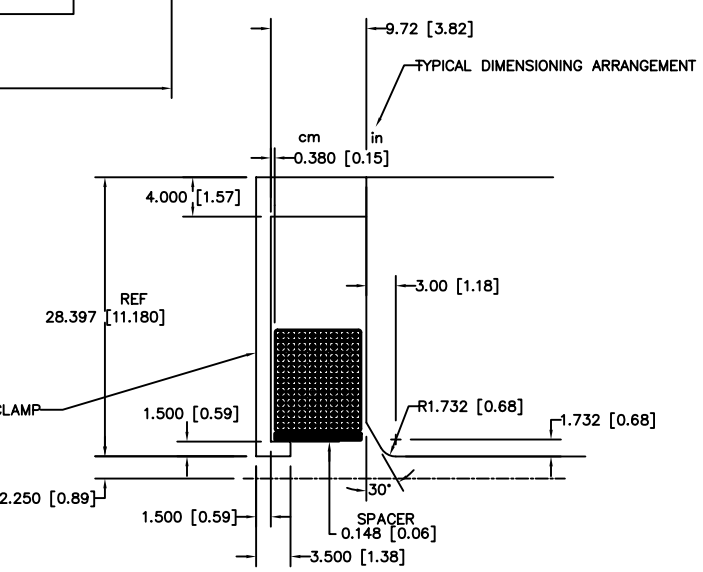

SECTION B–B

SYM	CHANGE DESCRIPTION	BY	CHKD	DATE

REVISIONS

ITEM	DWG/PART NUMBER	NOMENCLATURE OR DESCRIPTION	MATERIAL / SPEC	QTY

PARTS LIST

UNLESS OTHERWISE SPECIFIED: ALL DIMENSIONS ARE IN INCHES
TOLERANCES
DECIMALS: .X ±.– ; .XX ±.01 ; .XXX ±.005 — ANGULAR ±.25°
SURFACE ROUGHNESS 250√
REMOVE ALL BURRS AND BREAK SHARP EDGES .03 MAX.
SURFACE TEXTURE TO BE IN ACCORDANCE WITH LATEST ANSI B46.1
DIMENSIONING & TOLERANCING IN ACCORDANCE WITH LATEST ANSI Y14.5
DO NOT SCALE DRAWING

LOG NUMBER A05960

THIS DRAWING IS THE PROPERTY OF
ARGONNE NATIONAL LABORATORY

DRAWN BY HANUSKA	DATE 05/08/92	GP LEADER	DATE
CHECKED BY		PROJECT MGR	
DESIGNER HANUSKA	05/08/92	APPROVED/RELEASED	
RESPONSIBLE ENGINEER			

TITLE
ADVANCED PHOTON SOURCE
PAR
DIPOLE MAGNET
DESIGN LAYOUT

MATERIAL: SEE SPEC SHEET
SCALE 1:4
SHEET 1 of 1
SIZE D
DRAWING NUMBER 250101–00003–00