Flow Diagram and Equipment Locations for Heat Exchangers, HX-1 and HX-2

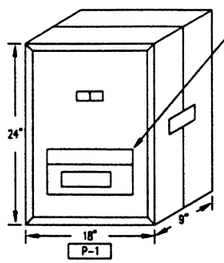

JCI PANEL FACILITY
MOUNT DC-1 INSIDE THE FACE OF P-1

Nametag Schedule

Item	Device Tag	Nametag Description
1	P-1	ARGONNE NATIONAL LABS CAMPUS PRIMARY HTG WATER HX-1 AND HX-2

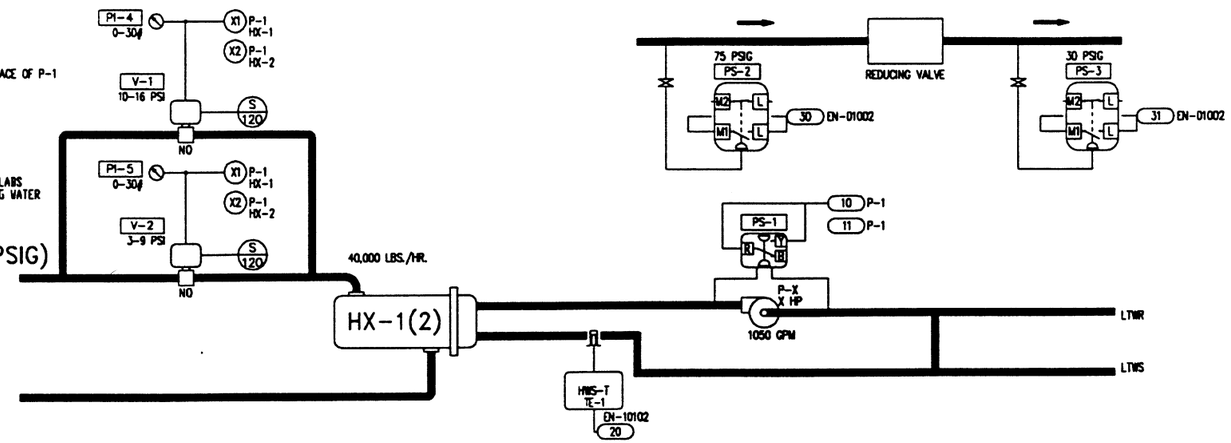

FIELD MATERIAL

DEVICE TAG	QTY	CODE NUMBER	DESCRIPTION
PS-1	2	P74FA-5C	DIFFERENTIAL PRES CONTROL
TE-1	2	TE-6000-4	SENSOR, 1000 OHM +/- .25%
	2	TE-6001-3	PACKING NUT & FTG.S
	2	WZ-1000-2	STAINLESS STEEL WELL,1/2"
V-1	2	----	SEE VALVE SCHEDULE
V-2	2	----	SEE VALVE SCHEDULE
PS-2	1	P47GA-9C	PRESSURE SWITCH
PS-3	1	P47GA-12C	PRESSURE SWITCH

PANEL MATERIAL

DEVICE TAG	QTY	CODE NUMBER	DESCRIPTION
(P) ACC	1	M-8000-393	SCREW-ON LAMCOID NAME-
(P) ACC	32	PD-113-15	TERM SEC MINIATURE 600V
(P) ACC	5	PD-113-3	TERMINAL BLOCK; MEDIUM
(P) MS-1	1	PD-112-22	BUSS SSU FUSE HOLDER/
	1	PD-112-23	FUSE T-5 (5AMP) FOR
(P) P-1	1	M-8100-1824	CONTROL CABINET;STD. FACE
(P) PI-1-PI-3	7	G-2010-5	AIR GAGE 1-1/2"
(P) PI-4-PI-5			
(P) R-1-R-4	4	PD-109-21	RELAY; PLUG IN 3PDT
	4	PD-101-35	SOCKET; 11PIN BLADE
(P) TX-1	1	Y64AL-2C	TRANSFORMER
(P) DC-1	1	LCP200-0	DIGITAL CONTROLLER
(P) EP-1	2	EP-8000-4	ELECT/PNEUMATIC TRANSDUCER

ANY MATERIAL WITH A (P) PRECEDING THE DEVICE TAG IS CONSIDERED PROPRIETARY EQUIPMENT AND IS BEING SUPPLIED BY JOHNSON CONTROLS, INC. ALL OTHER MATERIAL IS NON-PROPRIETARY EQUIPMENT.

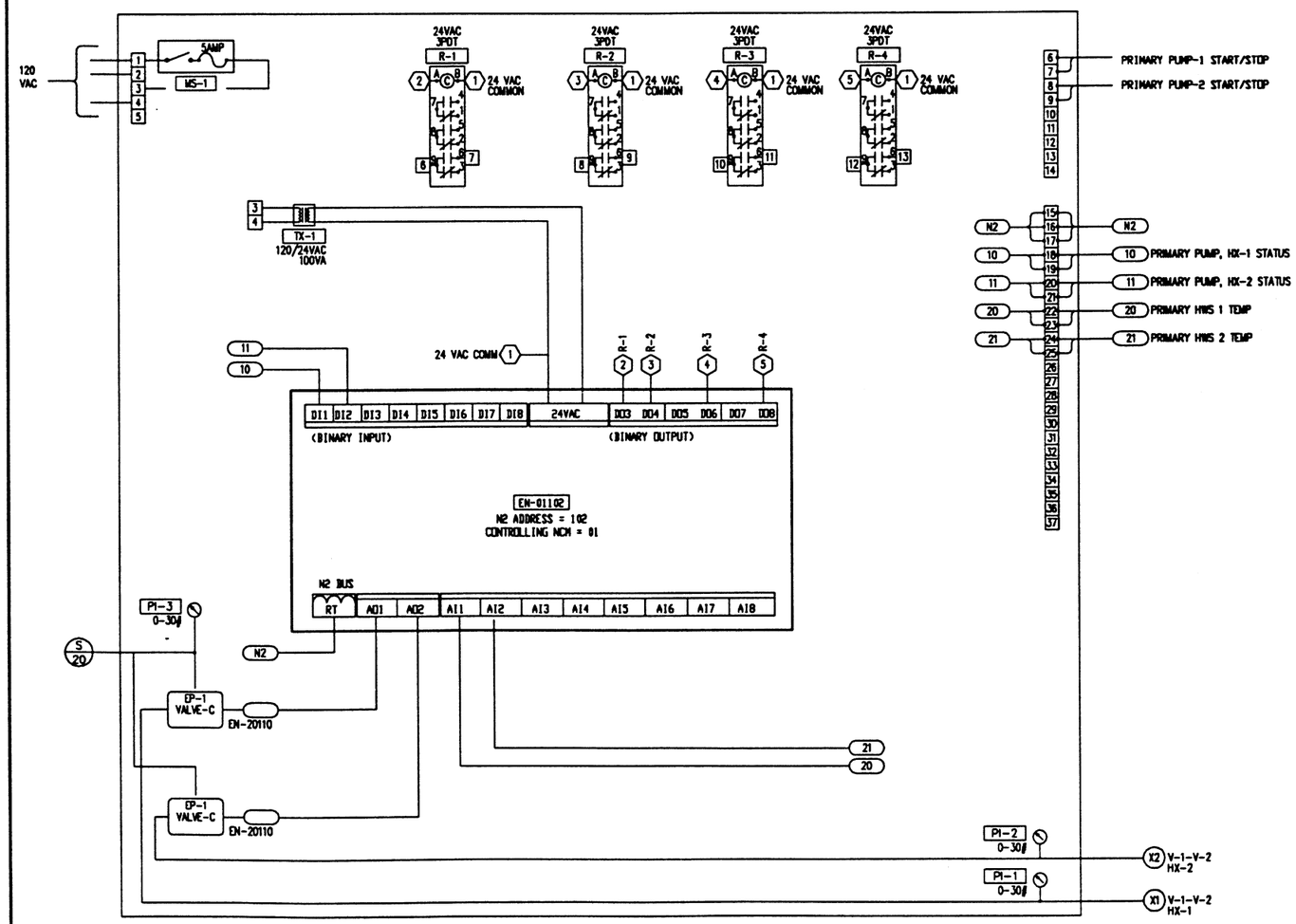

Sequence of Operations

The digital controller, EN-01102 will modulate N.O. steam control valves, V-1 and V-2 in sequence to maintain a primary heating water supply temperature of 230 F.(Adj.). Each heat exchanger system will be enabled manually by the operating engineer.

The following alarms will be reported to the ICS terminals:

- Main Steam Pressure Low
- Medium Steam Pressure Low

Motor Control

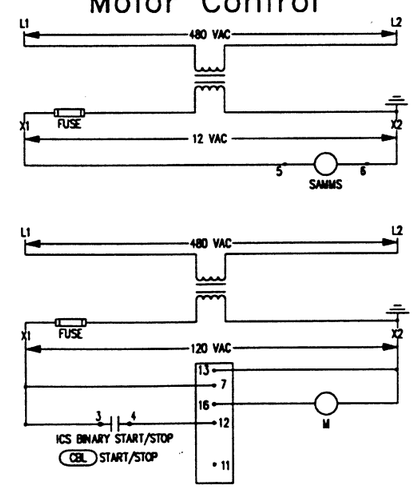

FILE: HTP-701

DRAWING TITLE					
Heating Water Heat Exchangers HX-1 and HX-2 Building 450, APS Utilities			RECORD	05/11/94	SF
		4	GENERAL	01/04/93	SF
		3	ADD ICS ALMS	11/07/92	SF
REFERENCE DRAWING		NO.	REVISION-LOCATION	ECN / DATE	BY

SALES ENGR	PROJECT MGR	APPL. ENGR	DRAWN	APPROVED
JP	SF	DCS	BY SF DATE 12/18/91	BY DATE

PROJECT
The Argonne National Labs
Advanced Photon Source Campus
9700 Cass Avenue South
Argonne, IL 60439

JOHNSON CONTROLS
Systems & Services Division

3007 MALMO ROAD
ARLINGTON HEIGHTS
ILLINOIS 60005
708/364-1500 Main
708/808-4438 Eng

CONTRACT NUMBER 91390-0009

DRAWING NUMBER 91-9-A-09A

COPYRIGHT JOHNSON CONTROLS, INC.1993