Emergency Generator Room Temperature Controls

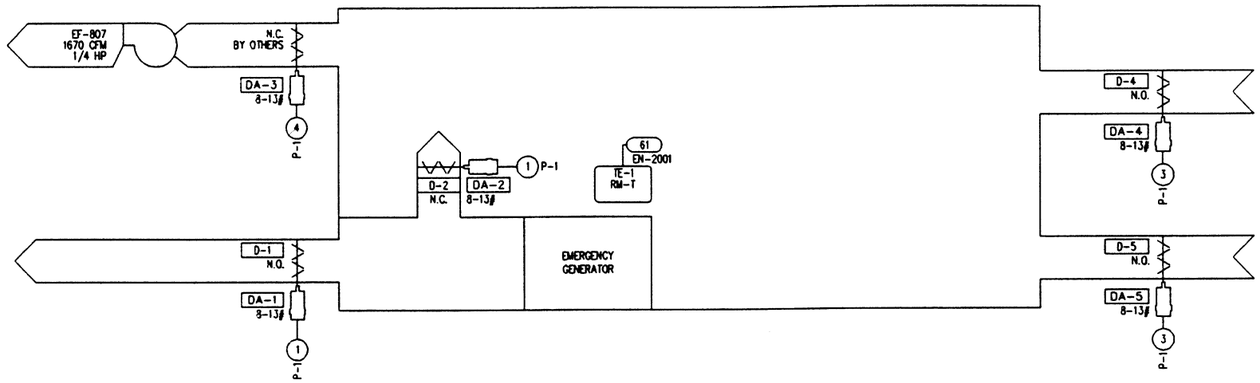

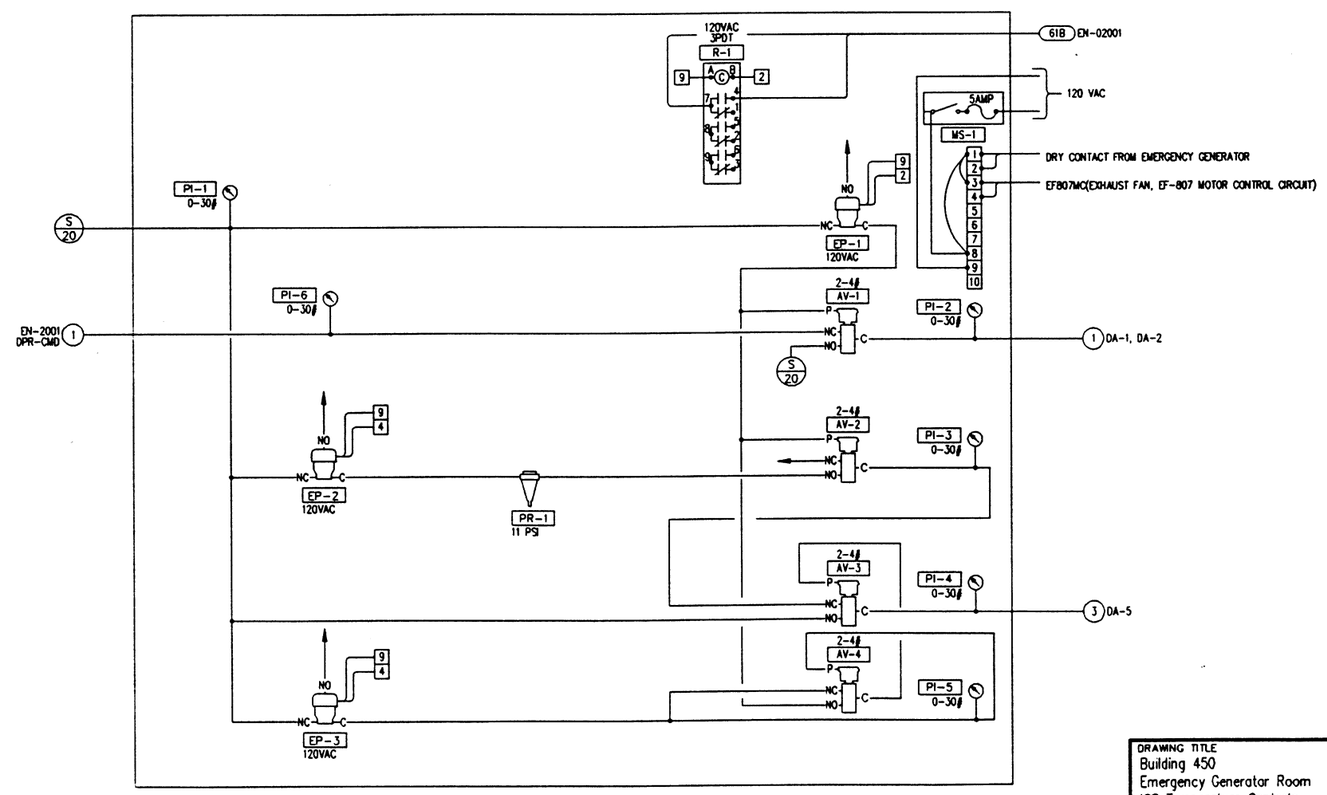

Nametag Schedule

Item	Device Tag	Nametag Description
1	P-1	ARGONNE NATIONAL LABS BUILDING 450 EMERGENCY GENERATOR

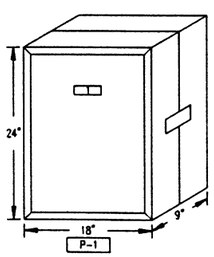

NOTES:

1. All material designated with (P) preceeding the device tag in the Bill of Material is proprietary and is being supplied by Johnson Controls, Inc. All other material is considered non-proprietry.

COPYRIGHT JOHNSON CONTROLS, INC 1993

FIELD MATERIAL

DEVICE TAG	QTY	CODE NUMBER	DESCRIPTION
D-1-D-5	-	---	SEE DAMPER SCHEDULE
DA-1-DA-5	-	---	SEE DAMPER SCHEDULE
TE-1	1	TE-6000-4	SENSOR, 1000 OHM +/- .25%
	1	T-4000-2139	COVER PLAS HRZ CONC NO-T
	1	TE-6001-4	ELEMENT HOLDER F/TE &

PANEL MATERIAL

DEVICE TAG	QTY	CODE NUMBER	DESCRIPTION
(P) ACC	1	M-8000-393	SCREW-ON LAMCOID NAME-
(P) ACC	10	PD-113-3	TERMINAL BLOCK; MEDIUM
(P) AV-1-AV-4	4	V-6135-1	AIR SW. VALVE, 3-WAY
(P) EP-1-EP-3	3	V-2410-2	VALVE, SOL AIR, 3-WAY
(P) MS-1	1	PD-112-22	BUSS SSU FUSE HOLDER/
	1	PD-112-23	FUSE T-5 (5AMP) FDR
(P) P-1	1	M-8100-1824	CONTROL CABINET;STD. FACE
(P) PI-1-PI-6	6	G-2010-5	AIR GAGE 1-1/2'
(P) PR-1	1	R-130-1	1/8 ' 1 SCFM PRV
(P) ACC	1	F-4218-1302	MOUNTING
R-1	1	RR3B-UL-120VAC	RELAY
ACC	1	SH3B-05	RELAY BASE

MOTOR CONTROL

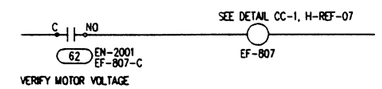

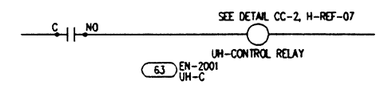

CS TERMINATION

BAY	TERM	FM	DEVICE	REFERENCE DETAIL
** ENCLOSURE: EN-2001				
BAY12	TB2	R[-10	TE-1	N-RTD-2TWIST-R
BAY3	TB2B	LI-10	----	N-NO-2TWIST-L
BAY14	O	RO-7/8	P-1	P-OUT-PNEU-R
BAY14	TB3	RO-9	EF807MC	N-NO-2TWIST-R
BAY14	TB4	RO-10	UH-MC	N-NO-2TWIST-R

SEQUENCE OF OPERATIONS

GENERAL

The Emergency Generator room space temperature will be globally available at any ISC operator interface. A low temperature alarm will be issued in the event that the space temperature drops below 45 F.(adjustable).

EMERGENCY GENERATOR OFF

Digital controller, EN-2001, will sequence the operation of exhuast fan, EF-807 and electric unit heater to maintain a space temperature setpoint of 50 F.(adjustable at ICS) fresh air damper actuator, DA-4, 5 will open to minimum with the operation of exhaust fan, EF-807.

EMERGENCY GENERATOR ON

Digital controller, EN-2001, will modulate discharge and exhaust air damper actuators, DA-1 and DA-2 proportionally to maintain a space temperature of 50 F.(adjustable) fresh air damper, D-4 and DA-5 will open to 100 percent upon the emergency generator being started. The operation of the exhaust fan and the unit heater will remain the same as above.

FILE: EM_GEN

REFERENCE DRAWING NO.	REVISION-LOCATION	ECN	DATE	BY
	RECORD		05/11/94	SF
4	GENERAL		01/04/93	SF
3	ADD ALARM POINTS		10/16/92	SF

SALES ENGR	PROJECT MGR	APPL. ENGR	DRAWN		APPROVED	
JP	SF	DCS	BY SF	DATE 12/18/91	BY	DATE

DRAWING TITLE
Building 450
Emergency Generator Room
ICS Temperature Controls
Flow Diagram and Panel Detail

PROJECT
The Argonne National Labs
Advanced Photon Source Campus
9700 Cass Avenue South
Argonne, IL 60439

JOHNSON CONTROLS
Systems & Services Division

3007 MALMO ROAD
ARLINGTON HEIGHTS
ILLINOIS 60005
708/364-1500 Main
708/806-4438 Eng

CONTRACT NUMBER 91390-0009

DRAWING NUMBER 91-9-A-07A