Digital ASCs Serving the VAV Terminal Units for AHU-801

PANEL MATERIAL

	DEVICE TAG	QTY	CODE NUMBER	DESCRIPTION
(P)	ACC	10	PD-113-3	TERMINAL BLOCK; MEDIUM
(P)	DC-1	4	AS-VAV101-0	DIGITAL ASC VAV CONTROLLER
(P)	DA-1	4	ATP-2040-12	ACTUATOR/TRANSMITTER PACKAGE
(P)	TE-1	4	TE-6100-12	WALL MOUNTED NI TEMP ELEMENT W/SP ADJ.
(P)	ACC	4	TE-6100-961	NOM CONTACT, TEMP DCC SWITCH
(P)	R-1-2	8	RH4(24VAC)	4PDT 24 VAC RELAY WITH LIGHT-IDEK
(P)	ACC	4	RH4B	RELAY BASE-IDEK
(P)	TX-1	4	Y65AS-1C	120/24 VAC TRANSFORMER

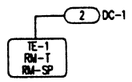

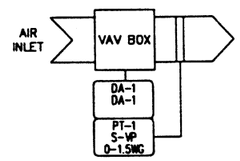

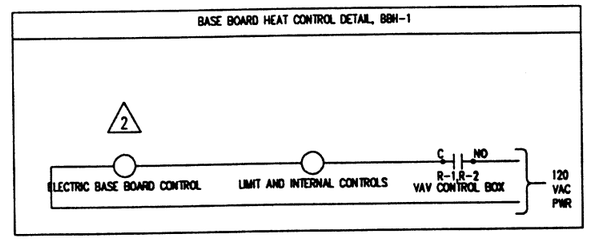

Room Schedule

Electric Convector Tag	Associated VAV Box Tag	ICS Tag for VAV Box Controller/Enclosure
EC-801	VAV-801	EN-10150
EC-802	VAV-801	EN-10150
EC-803	VAV-801	EN-10150
EC-804	VAV-802	EN-10151
EC-805	VAV-803	EN-10152
EC-806	VAV-803	EN-10152
EC-807	VAV-804	EN-10153
EC-808	VAV-804	EN-10153
EC-809	VAV-804	EN-10153
EC-810	VAV-804	EN-10153

CFM AT 1.00 IN WG SUPPLY AIR STATIC PRESSURE

VAV-801-803 = 350 CFM
VAV-804 =3000 CFM

VAV Box Control Enclosure

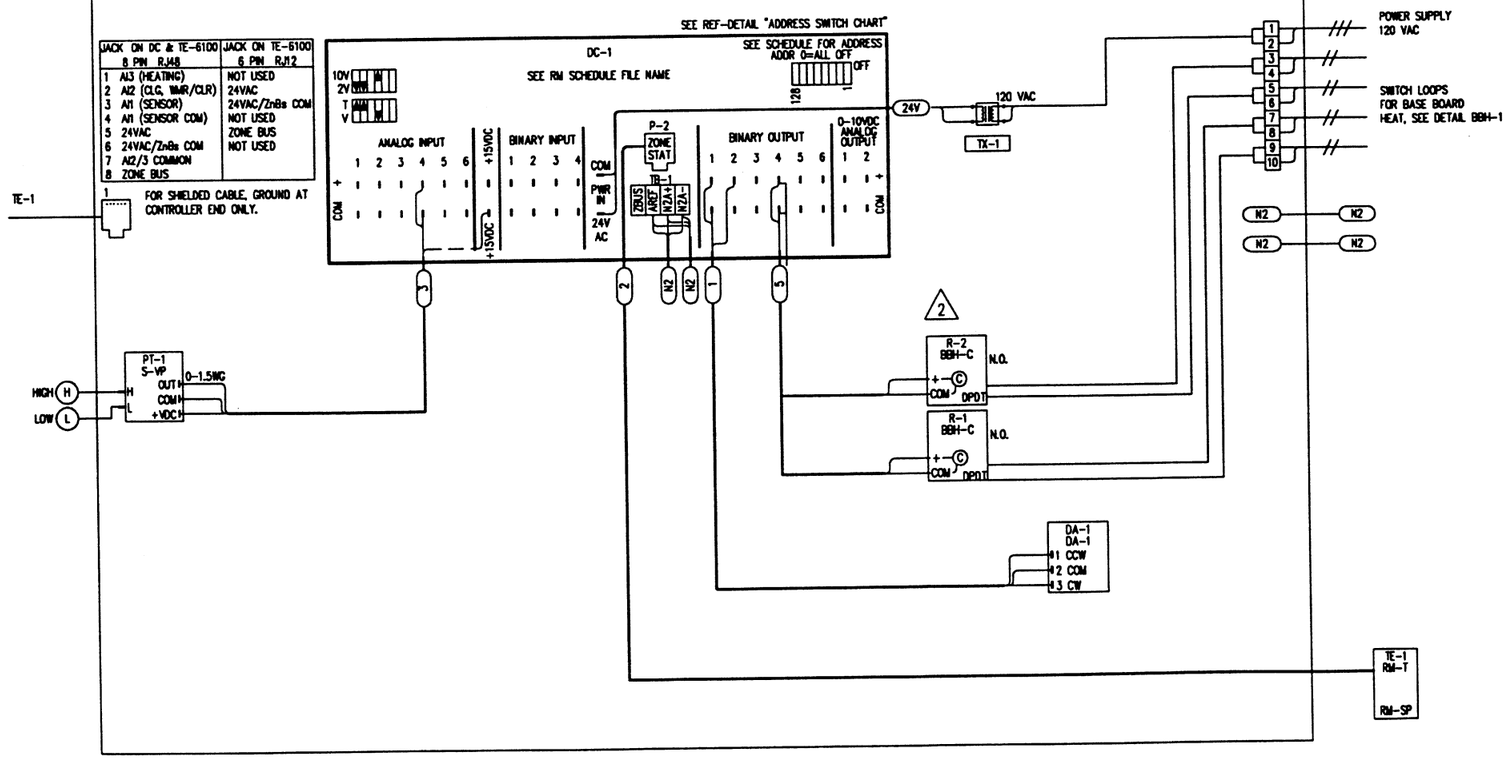

VAV BOX CONTROLLER ENCLOSURE LAYOUT

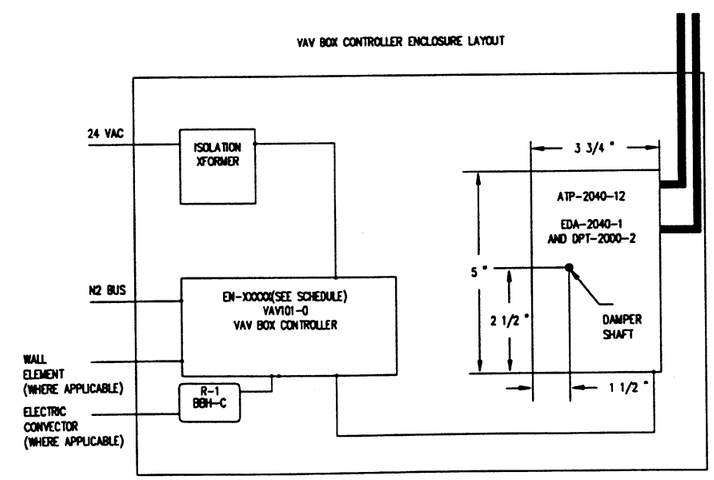

COPYRIGHT JOHNSON CONTROLS, INC.1993

FILE: 450_VAVB

REFERENCE DRAWING	NO.	REVISION-LOCATION	ECN	DATE	BY
		RECORD		05/11/94	SF
	2	GENERAL		06/29/93	SF
	1	GENERAL		03/24/93	SF

DRAWING TITLE
Building 450, Utilities
Zone Control Details
Variable Air Volume Terminal
Units, VAV-801-VAV-804

SALES ENGR	PROJECT MGR	APPL. ENGR	DRAWN	APPROVED
JP	SF	DCS	BY SF DATE 01/05/92 BY	DATE

PROJECT
The Argonne National Labs
Advanced Photon Source Campus
9700 Cass Avenue South
Argonne, IL 60439

JOHNSON CONTROLS
Systems & Services Division

3007 MALMO ROAD
ARLINGTON HEIGHTS
ILLINOIS 60005
708/364-1500 Main
708/808-4438 Eng

CONTRACT NUMBER 91390-0009

DRAWING NUMBER 91-9-A-04C