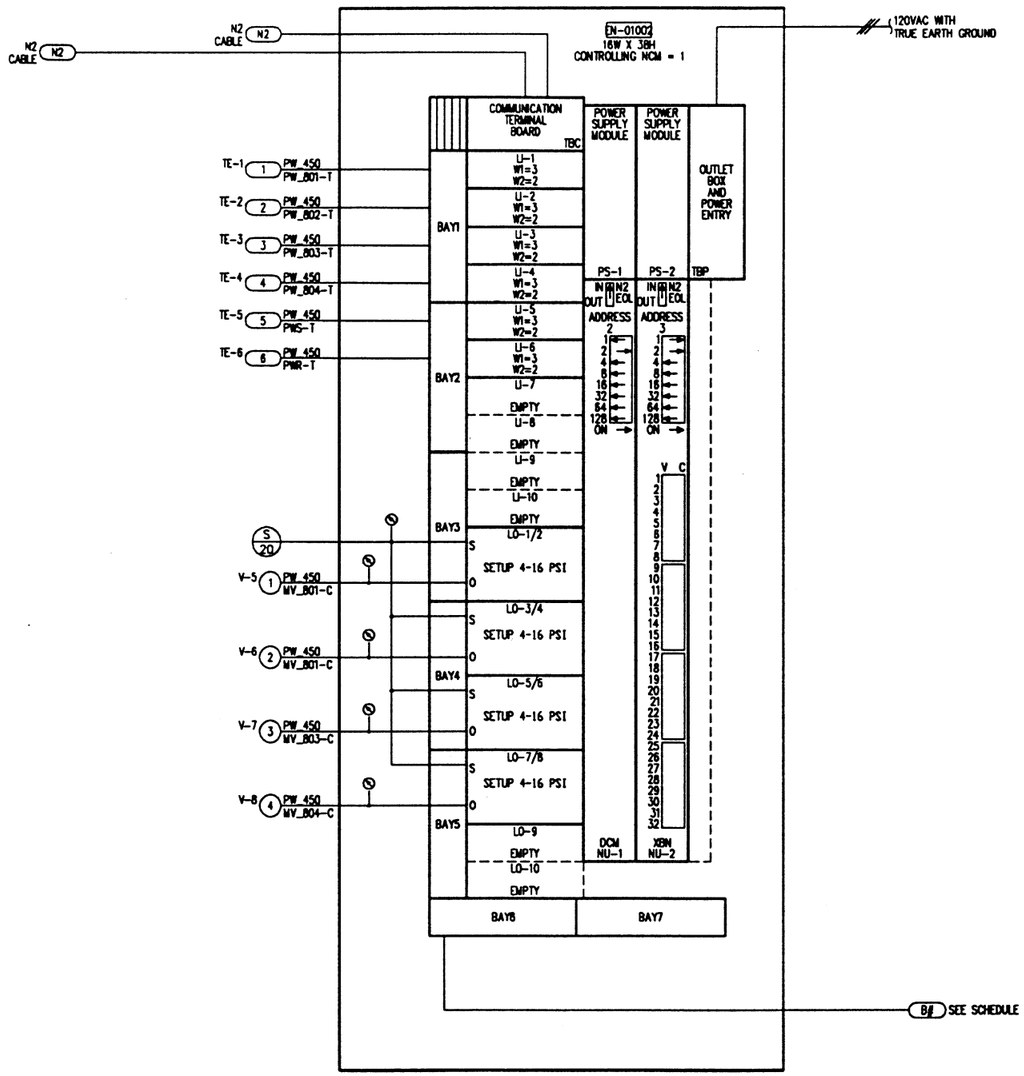

Enclosure, EN-01002 Serving Building 450
Process Water Heat Exchangers, HE-801 - HE-804

PANEL MATERIAL

DEVICE TAG	QTY	CODE NUMBER	DESCRIPTION
(P) EN-1002	1	EN-BSF201-0	2 SLOT BASE FRAME
	1	EN-CVC201-0	CLEAR COVER FOR 2-SLOT
	1	EN-ENC201-0	2 SLOT ENCLOSURE
(P) LI-1-LI-6	6	FN-IUN101-0	UNIVERSAL INPUT FM
(P) LI-7-LI-10, (P) LO-9-LO-10	6	FN-KIT127-0	FM BLANKOFFS
(P) LO-1/2, (P) LO-3/4, (P) LO-5/6, (P) LO-7/8	4	FN-OAP101-0	E/P OUT FM FOR DCM
	4	FN-OAP102-0	OAP MANUAL MODULE
(P) NU-1	1	NU-DCN101-0	DIGITAL CONTROL MODULE
(P) NU-2	1	NU-XBN101-0	XN 32 BIN INPUT
(P) PS-1-PS-2	2	NU-PWR101-0	POWER SUPPLY

NOTES:

1. ALL MATERIAL WITH (P) PRECEEDING THE DEVICE TAG IN THE BILL OF MATERIAL IS PROPRIETARY AND IS BEING SUPPLIED BY JOHNSON CONTROLS, INC. ALL OTHER MATERIAL IS NON-PROPRIETARY.

Control System Termination

2 NC1_HW\DCM2	DCM	101				
		Input	1	HE-801\PW-801-T	AI	
		Input	2	HE-802\PW-802-T	AI	
		Input	3	HE-803\PW-803-T	AI	
		Input	4	HE-804\PW-804-T	AI	
		Input	5	HE-Comn\PWS-T	AI	
		Input	6	HE-Comn\PWR-T	AI	
		Output	1	HE-801\MIX-VLV	AOD	PROP
		Output	3	HE-802\MIX-VLV	AOD	PROP
		Output	5	HE-803\MIX-VLV	AOD	PROP
		Output	7	HE-804\MIX-VLV	AOD	PROP
		Output	9	SRY_450\CSS_ALRM	BO	MAINT
		Loop	1	NC1_SV\HE-801-C	PIDL	
		Loop	2	NC1_SV\HE-802-C	PIDL	
		Loop	3	NC1_SV\HE-803-C	PIDL	
		Loop	4	NC1_SV\HE-804-C	PIDL	
3 NC1_HW\XBN1	XBN	XBN				
		Input	1	NC1_SV\801-ISOL	BI	SINGLE
		Input	2	NC1_SV\802-ISOL	BI	SINGLE
		Input	3	NC1_SV\803-ISOL	BI	SINGLE
		Input	4	HE-801\TWR-ISOL	BI	SINGLE
		Input	5	HE-802\TWR-ISOL	BI	SINGLE
		Input	6	HE-803\TWR-ISOL	BI	SINGLE
		Input	7	HE-804\TWR-ISOL	BI	SINGLE
		Input	8	HE-801\PWS-ISOL	BI	SINGLE
		Input	9	HE-802\PWS-ISOL	BI	SINGLE
		Input	10	HE-803\PWS-ISOL	BI	SINGLE
		Input	11	HE-804\PWS-ISOL	BI	SINGLE
		Input	12	NC1_SV\801-ALRM	BI	SINGLE
		Input	13	NC1_SV\802-ALRM	BI	SINGLE
		Input	14	NC1_SV\803-ALRM	BI	SINGLE
		Input	15	NC1_SV\CH-801-S	BI	SINGLE
		Input	16	NC1_SV\CH-802-S	BI	SINGLE
		Input	17	NC1_SV\CH-803-S	BI	SINGLE

COPYRIGHT JOHNSON CONTROLS, INC.1993

DRAWING TITLE
Enclosure, EN-01002
Network Expansion Unit-NEU
Serving process water heat
exchangers, HE-801-804

PROJECT
The Argonne National Labs
Advanced Photon Source Campus
9700 Cass Avenue South
Argonne, IL 60439

REFERENCE DRAWING	NO.	REVISION-LOCATION	ECN	DATE	BY
		RECORD		05/11/94	SF
	4	P-816/17 VFD		02/17/94	SF
	3	GENERAL		10/16/92	SF

SALES ENGR	PROJECT MGR	APPL. ENGR	DRAWN	APPROVED
JP	SF	DCS	BY SF DATE 12/12/91	BY DATE

JOHNSON CONTROLS
Systems & Services Division
3007 MALMO ROAD
ARLINGTON HEIGHTS
ILLINOIS 60005
708/364-1500 Main
708/808-4438 Eng

FILE:
DCODE:

CONTRACT NUMBER 91390-0009
DRAWING NUMBER 91-9-A-03C