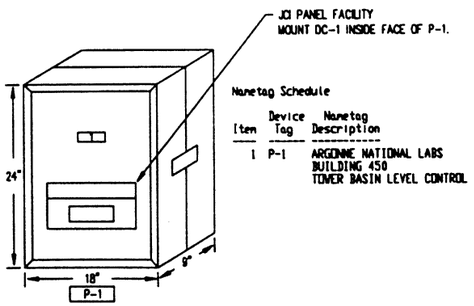

Nametag Schedule

Item	Device Tag	Nametag Description
1	P-1	ARGONNE NATIONAL LABS BUILDING 450 TOWER BASIN LEVEL CONTROL

Level Transmitter Detail

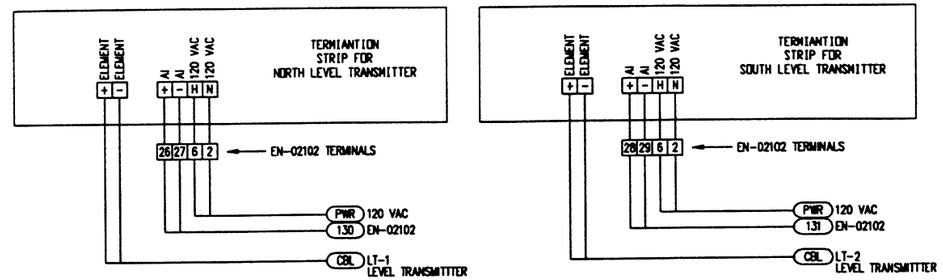

PANEL MATERIAL

DEVICE TAG	QTY	CODE NUMBER	DESCRIPTION
(P) ACC	1	M-8000-393	SCREW-ON LAMCOID NAME-
(P) ACC	32	PD-113-15	TERM SEC MINIATURE 600V
(P) ACC	6	PD-113-3	TERMINAL BLOCK; MEDIUM
(P) MS-1-MS-3	2	PD-112-22	BUSS SSU FUSE HOLDER/
	2	PD-112-23	FUSE T-5 (5AMP)
(P) MS-2	1	PD-112-22	BUSS SSU FUSE HOLDER/
	1	PD-112-XX	FUSE T-10 (10AMP)
(P) P-1	1	M-8100-1824	CONTROL CABINET;STD. FACE
(P) R-1-R-2	2	PD-109-21	RELAY; PLUG IN 3PDT
	2	PD-101-35	SOCKET; 11PIN BLADE
(P) TX-1	1	Y64AL-2C	TRANSFORMER
(P) DC-1	1	LCP200-0	DIGITAL CONTROLLER
PB-1	1	A-XXXXXXXX	ENCLOSURE, NEMA 4X-HOFFMAN
ACC	1	A-24P16	BACK PLATE-HOFFMAN
ACC	1	V8400H-H	HEATER ASSBLY-VICON

ANY MATERIAL WITH A (P) PRECEEDING THE DEVICE TAG IS CONSIDERED PROPRIETARY EQUIPMENT AND IS BEING SUPPLIED BY JOHNSON CONTROLS, INC. ALL OTHER MATERIAL IS NON-PROPRIETARY EQUIPMENT.

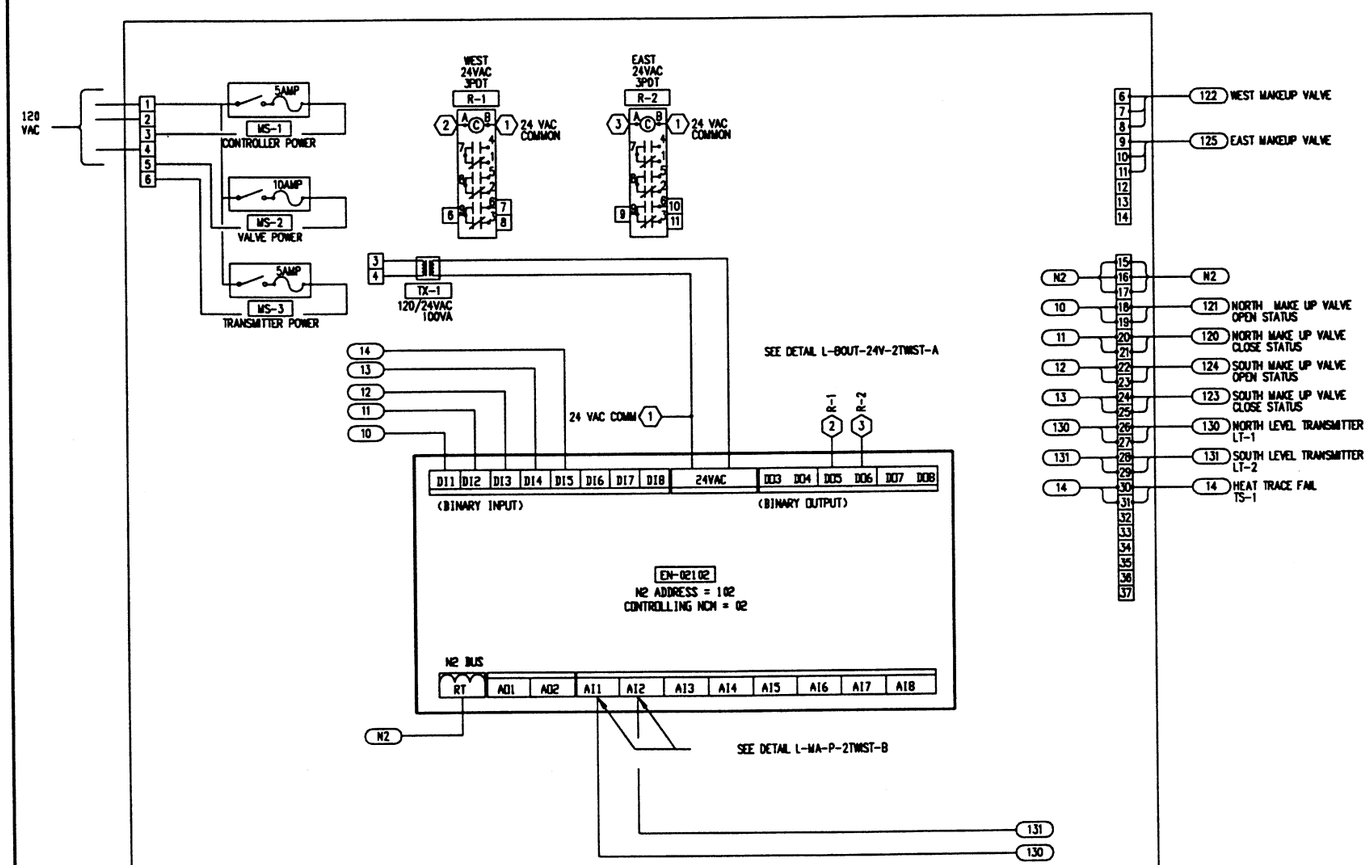

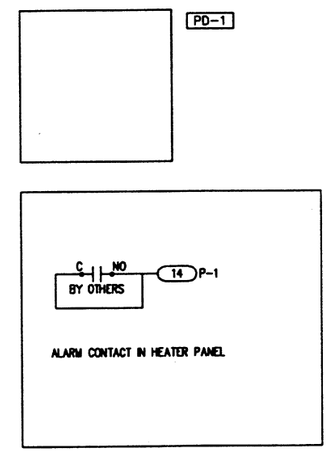

NOTES:

1. MOUNT TRANSMITTERS AND HEATER IN OUTDOOR ENCLOSURE.

Motor Control

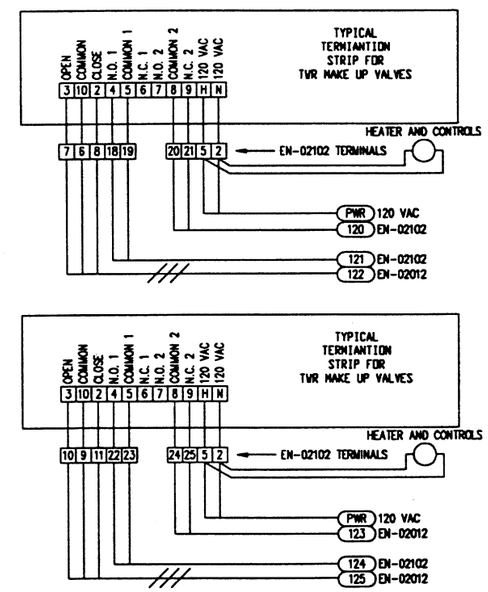

COPYRIGHT JOHNSON CONTROLS, INC.1993

FILE: 450_T_MU

DRAWING TITLE
Building 450, Utilities
Cooling Tower Makeup Water
Control
Enclosure, EN-02102

REFERENCE DRAWING	NO.	REVISION-LOCATION	ECN	DATE	BY
		RECORD		05/11/94	SF
	2	GENERAL		01/02/93	SF
	1	GENERAL		10/16/92	SF

SALES ENGR	PROJECT MGR	APPL. ENGR	DRAWN	APPROVED
JP	SF	DCS	BY SF DATE 02/07/92	BY DATE

PROJECT
The Argonne National Labs
Advanced Photon Source Campus
9700 Cass Avenue South
Argonne, IL 60439

JOHNSON CONTROLS
Systems & Services Division

3007 MALMO ROAD
ARLINGTON HEIGHTS
ILLINOIS 60005
708/364-1500 Main
708/808-4438 Eng

CONTRACT NUMBER 91390-0009

DRAWING NUMBER 91-9-A-02F