BUILDING 450 ICS ALARM POINT DETAILS

FIELD MATERIAL

DEVICE TAG	QTY	CODE NUMBER	DESCRIPTION
PS-1-PS-4	4	P47GA-12C	STEAM PRESSURE CONTROL
PS-1	1	P74FA-1C	DIFFERENTIAL PRES CONTROL
TS-1	1	A19AAC-9C	GENL PURPOSE TEMP CONTROL
	1	WZ-1000-2	S.S. WELL ASSY
TS-2	1	T26S-18C	LINE VOLTAGE THERMOSTAT
	1	PLT333-12R	FACEPLATE (REPL.)
PS-2	1	P108C-7C	LOW RANGE PRES CONTROL
R-1	2	RR2B-UL-120VAC	CONTROL RELAY
	2	SH2B-05	

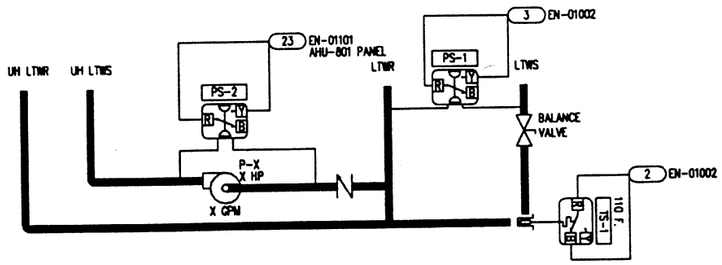

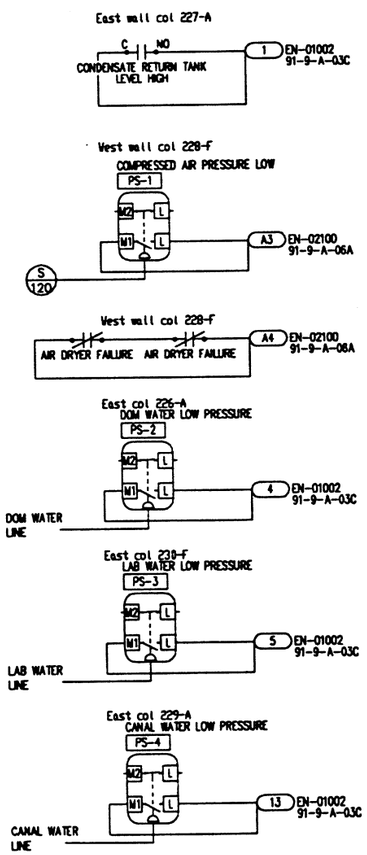

Notes:

1. Field verify device locations.

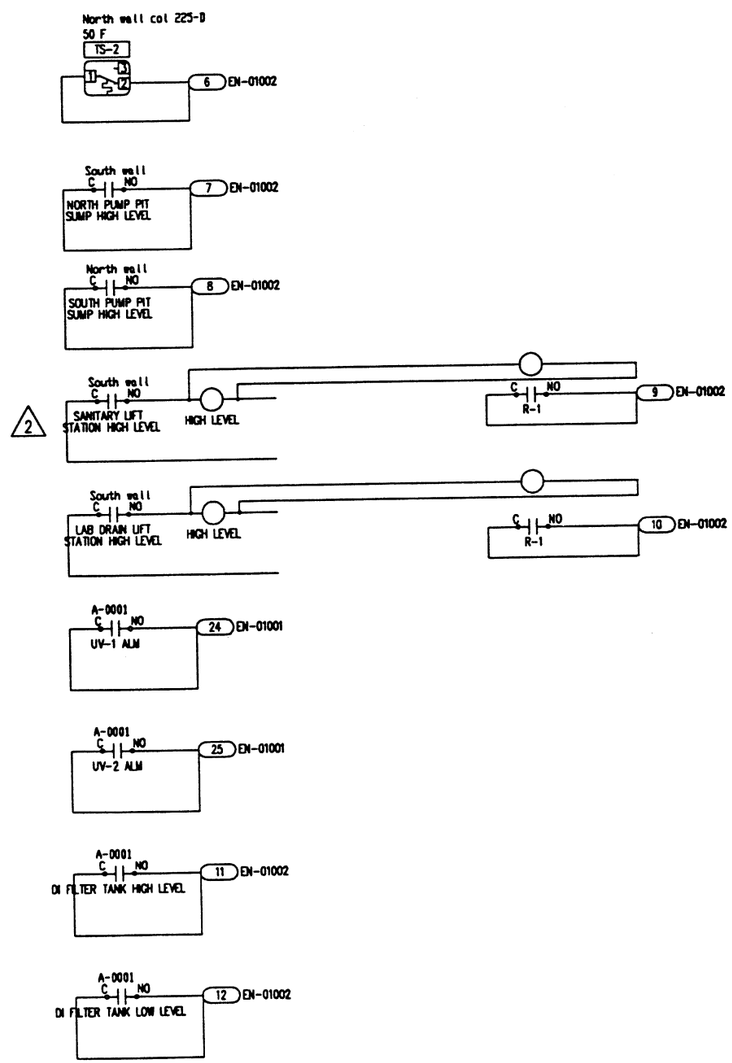

The following alarms will be reported to the ICS terminals:

- Secondary LTW low differential pressure
- Secondary LTW low temperature
- Condensate tank high level
- Compressed air pressure, low
- Air dryer trouble
- Domestic water pressure, low
- Lab water pressure, low
- Canal water pressure, low
- Low building temperature
- North pump pit sump level, high
- South pump pit sump level, high
- Sanitary lift station level, high
- Lab drain lift station level, high
- UV-1 lamp alarm
- UV-2 lamp alarm
- Tower heat trace fail
- Generator status
- Loss of normal power
- Building on Emergency power
- Main steam pressure, low
- Medium steam pressure, low
- DI filter tank high level alarm
- DI filter tank low level alarm
- Unit heater secondary heating water pump failure

MOTOR CONTROL

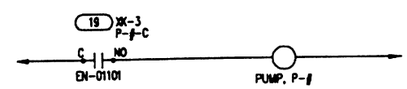

SEE DETAIL CC-1, H-REF-07

IN CONSIDERATION OF THE RECEIPT OF THIS DOCUMENT, THE RECIPIENT AGREES NOT TO REPRODUCE, COPY, USE OR TRANSMIT THIS DOCUMENT AND/OR THE INFORMATION THEREIN CONTAINED, IN WHOLE OR IN PART, OR TO SUFFER SUCH ACTION BY OTHERS, FOR ANY PURPOSE, EXCEPT WITH THE WRITTEN PERMISSION OF JOHNSON CONTROLS, INC. AND FURTHER AGREES TO SURRENDER SAME TO JOHNSON CONTROLS, INC. UPON DEMAND.

COPYRIGHT JOHNSON CONTROLS, INC.1993

DRAWING TITLE
Building 450
ICS Alarm Details

REFERENCE DRAWING	NO.	REVISION-LOCATION	ECN	DATE	BY
		RECORD		05/11/94	SF
	3	REVISE LIFT STA		07/01/93	SF
	2	GENERAL		01/02/93	SF

SALES ENGR	PROJECT MGR	APPL. ENGR	DRAWN		APPROVED	
JP	SF	DCS	BY SF	DATE 11/07/92	BY	DATE

FILE: ALM_DET
DCODE: 19930701.1836

PROJECT
The Argonne National Labs
Advanced Photon Source Campus
9700 Cass Avenue South
Argonne, IL 60439

JOHNSON CONTROLS
Systems & Services Division
3007 MALMO ROAD
ARLINGTON HEIGHTS
ILLINOIS 60005
708/364-1500 Main
708/808-4438 Eng

CONTRACT NUMBER
91390-0009

DRAWING NUMBER
91-9-A-02D